AMENDMENT OF SOLICITATION/MODIFICATION OF CONTRACT

1. CONTRACT ID CODE	PAGE OF PAGES	
J	1	2

2. AMENDMENT/MODIFICATION NO.	3. EFFECTIVE DATE	4. REQUISITION/PURCHASE REQ. NO.	5. PROJECT NO.(If applicable)
0001	06-May-2004	W22W9K-4099-8343	

6. ISSUED BY CODE W912QR

U. S. ARMY ENGINEER DISTRICT, LOUISVILLE
600 DR. MARTIN LUTHER KING, JR. PLACE
ROOM 821
LOUISVILLE KY 40202-2230

7. ADMINISTERED BY (If other than item 6) CODE DACA27

MILITARY/RESERVE TEAM
600 DR. M. L. KING, JR. PL., RM 821
ATTN: TOM E. DICKERT
LOUISVILLE KY 40202-2230

8. NAME AND ADDRESS OF CONTRACTOR (No., Street, County, State and Zip Code)

CODE FACILITY CODE

X	9A. AMENDMENT OF SOLICITATION NO. W912QR-04-R-0022
X	9B. DATED (SEE ITEM 11) 20-Apr-2004
	10A. MOD. OF CONTRACT/ORDER NO.
	10B. DATED (SEE ITEM 13)

11. THIS ITEM ONLY APPLIES TO AMENDMENTS OF SOLICITATIONS

[X] The above numbered solicitation is amended as set forth in Item 14. The hour and date specified for receipt of Offer [ ] is extended, [X] is not extended.

Offer must acknowledge receipt of this amendment prior to the hour and date specified in the solicitation or as amended by one of the following methods: (a) By completing Items 8 and 15, and returning _____ copies of the amendment; (b) By acknowledging receipt of this amendment on each copy of the offer submitted; or (c) By separate letter or telegram which includes a reference to the solicitation and amendment numbers. FAILURE OF YOUR ACKNOWLEDGMENT TO BE RECEIVED AT THE PLACE DESIGNATED FOR THE RECEIPT OF OFFERS PRIOR TO THE HOUR AND DATE SPECIFIED MAY RESULT IN REJECTION OF YOUR OFFER. If by virtue of this amendment you desire to change an offer already submitted, such change may be made by telegram or letter, provided each telegram or letter makes reference to the solicitation and this amendment, and is received prior to the opening hour and date specified.

12. ACCOUNTING AND APPROPRIATION DATA (If required)

13. THIS ITEM APPLIES ONLY TO MODIFICATIONS OF CONTRACTS/ORDERS. IT MODIFIES THE CONTRACT/ORDER NO. AS DESCRIBED IN ITEM 14.

[ ] A. THIS CHANGE ORDER IS ISSUED PURSUANT TO: (Specify authority) THE CHANGES SET FORTH IN ITEM 14 ARE MADE IN THE CONTRACT ORDER NO. IN ITEM 10A.

[ ] B. THE ABOVE NUMBERED CONTRACT/ORDER IS MODIFIED TO REFLECT THE ADMINISTRATIVE CHANGES (such as changes in paying office, appropriation date, etc.) SET FORTH IN ITEM 14, PURSUANT TO THE AUTHORITY OF FAR 43.103(B).

[ ] C. THIS SUPPLEMENTAL AGREEMENT IS ENTERED INTO PURSUANT TO AUTHORITY OF:

[ ] D. OTHER (Specify type of modification and authority)

E. IMPORTANT: Contractor [ ] is not, [ ] is required to sign this document and return _____ copies to the issuing office.

14. DESCRIPTION OF AMENDMENT/MODIFICATION (Organized by UCF section headings, including solicitation/contract subject matter where feasible.)

W912QR-04-R-0022 D/B ALT USARC/OMS/UNHTD STRG, CAVEN POINT, NJ is amended as follows:

SEE ATTACHED SUMMARY OF CHANGES.

Except as provided herein, all terms and conditions of the document referenced in Item 9A or 10A, as heretofore changed, remains unchanged and in full force and effect.

15A. NAME AND TITLE OF SIGNER (Type or print)		16A. NAME AND TITLE OF CONTRACTING OFFICER (Type or print) TEL: EMAIL:	
15B. CONTRACTOR/OFFEROR (Signature of person authorized to sign)	15C. DATE SIGNED	16B. UNITED STATES OF AMERICA BY (Signature of Contracting Officer)	16C. DATE SIGNED 06-May-2004

SECTION SF 30 BLOCK 14 CONTINUATION PAGE

SUMMARY OF CHANGES

Outline Specifications, are replaced by the attached Outline Specifications, (Amendment #1). Note: Division 10 - Specialities, Specification 10650, Operable Partitions and Division 16 - Electrical, Specification 16520, Exterior Luminaires, have changes.

Specification Section 01010, Statement of Work is replaced in its entirety by the attached Section 01010, Statement of Work (Amendment #1). Note: Paragraph 4.2.A and Paragraph 5.4.G.17.b are changed.

All other terms and conditions remain unchanged.

(End of Summary of Changes)

SECTION 01010
STATEMENT OF WORK - TABLE OF CONTENTS

PART 1 - GENERAL PROJECT DESCRIPTION....1
1.1 DESIGN OBJECTIVES....1
1.2 DESIGN/BUILD (D/B) CONTRACTOR RESPONSIBILITY....1
1.3 PROJECT DESCRIPTION – SITE....2
1.4 PROJECT DESCRIPTION – BUILDINGS....3
PART 2 - REQUEST FOR PROPOSAL (RFP) DESIGN DOCUMENTS....4
2.1 DOCUMENTS INCLUDED....4
PART 3 - GENERAL PROJECT REQUIREMENTS....4
3.1 GENERAL REQUIREMENTS....4
3.2 APPLICABLE CODES AND CRITERIA....6
PART 4 - SITE/CIVIL DESIGN AND CONSTRUCTION REQUIREMENTS....10
4.1 GENERAL....10
4.2 FIELD VERIFICATION OF EXISTING CONDITIONS....11
4.3 SITE DEVELOPMENT COMPLIANCE REQUIREMENTS....12
4.4 DESIGN / BUILD (D/B) CONTRACTOR'S USE OF THE SITE....12
4.5 HAZARDOUS MATERIALS....12
4.6 SITE DEMOLITION....13
4.7 SITE PLANNING....13
4.8 PAVING AND SIDEWALKS....14
4.9 GRADING AND DRAINAGE....14
4.10 WATER SUPPLY....15
4.11 SANITARY SEWER....15
4.12 SITE ELECTRICAL POWER AND LIGHTING....16
4.13 NATURAL GAS....16
4.14 FENCING....17
4.15 LANDSCAPING....17
4.16 ENVIRONMENTAL PERMITS/REGULATORY REQUIREMENTS....17
PART 5 - GENERAL DESIGN AND CONSTRUCTION REQUIREMENTS....18
5.1 GENERAL CRITERIA....18
5.2 ARCHITECTURAL....21
Break room....27
5.3 STRUCTURAL....31
5.4 MECHANICAL....32
5.5 ELECTRICAL....45
PART 6 - ADDITIONAL PROJECT REQUIREMENTS....54
6.1 SUBMITTAL REGISTER AND SHOP DRAWING REVIEW AND APPROVAL....54
6.2 WARRANTIES....55
6.3 PERMITS, AND REGULATORY AGENCY AND UTILITY COORDINATION....55
6.4 GOVERNMENT REAL ESTATE FORM 1354....55
6.5 PRESENTATION PHOTOGRAPHS....55
APPENDIX 'A'....57
SAMPLE FORM 1354....57
APPENDIX 'B'....58
5034-R FUNCTIONAL SPACE DETAILS....58
APPENDIX 'C'....59
LIGHT FIXTURE SCHEDULE....59
APPENDIX 'D'....60
FIRE PROTECTION / LIFE SAFETY CODE "DRAFT" SUBMITTAL....60

Amendment #1

CODE DETERMINATIONS....60
APPENDIX 'E'....61
FIRE FLOW DATA (In Process)....61
APPENDIX 'F'....62
WEATHER DESIGN DATA....62
APPENDIX 'G'....63
INTERIOR DESIGN REQUIREMENTS....63
APPENDIX 'H'....64
DRAWINGS....64
APPENDIX 'I'....65
TOPOGRAPHIC SURVEY....65
#1 APPENDIX 'J '....66
GEOTECHNICAL....66
APPENDIX 'K '....67
LEAD BASED PAINT SURVEY....67
#1 APPENDIX 'L'....68
SITE FACILITY SIGN DETAILS....68

Amendment #1

SECTION 01010

STATEMENT OF WORK

PART 1 - GENERAL PROJECT DESCRIPTION

1.1 DESIGN OBJECTIVES

A. The objective of this solicitation is to obtain a facility in which the using Units are able to effectively implement their Army Reserve (AR) support and training missions. These activities require sufficient space with up-to-date furnishings and equipment to support the Units' personnel. The facility environment must meet or exceed the U. S. Army Reserve (USAR) requirements, plus other code and regulatory requirements as referenced in these documents.

B. It is the design intent to provide the USAR with a Training Facility that meets or exceeds the specifications and requirements contained in this Request for Proposal (RFP). The USAR considers functionality, durability, operability, maintainability, first cost, operating cost and aesthetics to be important factors in the design and planning of the facility.

C. The Caven Point USARC is an existing facility consisting of four inter-connected buildings (known as Buildings 115, 115A, 198 and 204) that include functions for Training, Unit Storage, Vehicle Maintenance, and administration. Supporting facilities include an adjacent Privately Owned Vehicle (POV) parking area and an adjacent Military Equipment Parking (MEP) area and a wash rack. Also within the USARC is a vacant Fire Station (Building 191) and an un-occupied Storage Building (Building 197). There is a separate controlled access former OMS vehicle maintenance building (known as Building 199) that is occupied by a government agency independent of the U.S. Army Reserve. The D/B contractor is responsible for field verification of all existing site and building conditions.

D. The information provided in the RFP documents shall serve as the requirements for the Design / Build (D/B) Contractor's building design and construction execution, along with other code, regulatory, industry standards and professional practice requirements.

1.2 DESIGN/BUILD (D/B) CONTRACTOR RESPONSIBILITY

A. The D/B Contractor is to provide all labor, materials, equipment, supplies, permits, fees, and consultant services to design a full facility revitalization of the existing Army Reserve Center complex. The complex shall be a complete and usable facility meeting the requirements herein. The D/B Contractor shall develop a complete site, building, interior design and furniture package. The furniture package shall be Government Furnished/Government Installed (GFGI). The D/B Contractor shall design the furniture plans and prepare the procurement documents, refer to Appendix G.

B. Any discrepancies found in these RFP documents by the D/B Contractor shall be addressed to the Louisville District, Corps of Engineers before the submittal of the D/B Contractor's proposal. The D/B Contractor as Architect/Engineer of Record is solely responsible for the

design intent and the accuracy of their proposal and its compliance with all RFP requirements and all referenced codes and criteria. All information provided in this RFP package is to be considered schematic in nature and is to be verified by the D/B Contractor as part of the development of the project design and construction documents.

C. The D/B Contractor's design professionals (architect/engineers/designers) shall be the designers of record for the entire project. They must take full responsibility for the design and must satisfy themselves that the design meets regulatory and professional standards.

1.3 PROJECT DESCRIPTION – SITE

A. Existing Conditions

1. This project consists of the restoration of the Caven Point USARC, located at Caven Point Chapel Ave & Caven Point Road, Jersey City, New Jersey 07305. The facility is to be restored and also reconfigured to suit the current space planning requirements of the units that will occupy the restored facility. The intent is that at the conclusion of the project, the facility and its buildings will be suited to the Army Reserve of the 21st century.
2. The existing facility is part of a 74-acre tract of land owned by the U.S. Army Reserve in Jersey City, Hudson County, New Jersey. The Army Reserve acquired the property sometime in the late 1950's from the U.S. Government. The site was formerly the Caven Point Army Terminal, a 360-acre Army Center and Ordnance Depot developed during 1941-1942 time frame. The Caven Point Army Terminal operated up until 1954 and consisted of approximately 69 structures and a 4300-foot long marine pier. The Caven Point Army Terminal began selling and transferring portions of land to other government agencies, city authorities and civilian interests. The U.S. Army Reserve obtained their 74 acres at this time.
3. The facility is part of a 74-acre tract of land currently owned by the Army Reserve. The government plans to transfer approximately 4.32 acres of the site to the City of Jersey City for use in construction of proposed Route 185. The government proposes to transfer an additional 44.88 acres to Jersey City for the development of a mixed-use recreational golf and residential area. The government intends on acquiring 3.43 acres from Jersey City located near the northeast portion of the existing Reserve Center site. This project is being funded through funds acquired as part of this Real Property Exchange (RPX).
4. To the south of the site is a stadium and sports complex owned by Jersey City. To the east is Pointe Liberte, a condominium complex along Upper New York Bay. To the north is undeveloped land owned by the Jersey City Redevelopment Agency. West of the site is Caven Point Road and then the New Jersey Turnpike.
5. Most of the site was created by filling marsh and tidal lands during the creation of the Caven Point Army terminal during the 1941/1942 time frame. The site lies between 7.0 and 14.0 feet elevation above mean sea level.
6. The site is supplied commercially with water, electricity, natural gas and telephone service. Sanitary sewage is collected on site by gravity to a pump station, where it is pumped to treatment facilities owned by Jersey City. Jersey City, through United Water, supplies the domestic water service. Natural gas to the facility is provided by Public Service Electric and Gas Company.

B. Site Improvements (Refer to Part 4 of this Section 01010 for detailed information)

1. Parking and Roads

Amendment #1

a. A new POV Parking Lot is to be provided to meet current AT/FP requirements per Unified Facility Criteria UFC 4-010-01.
b. The existing gravel portion of the MEP parking lot in the rear of the facility to the north of Buildings 115 and 115A and east of Building 199 will be paved with bituminous.
c. The existing bituminous paved areas on the site will be cleaned, cracks sealed, and a new bituminous surface course provided.

2. Site Utilities
   a. Water Service—To be replaced. Additional fire hydrants to be provided to meet UFC 3-600-01.
   b. Sanitary Sewer—To be replaced.
   c. Natural Gas—Verify loads and capability of existing system to meet the anticipated loads. Replace gas lines, meter and regulators is not adequate to meet loads.
3. Site Features
   a. Site Fencing—Provide new motorized sliding gates.
   b. Signage—Provide all new, including new facility sign.
   c. Landscaping—Landscaping berms are to be provided between the new POV parking lot and the main buildings. Landscaping is an option and is described in Section 01011.

1.4 PROJECT DESCRIPTION – BUILDINGS

A. Training Center (Refer to Part 5 of this Section 01010 for detailed information)
1. The existing Training Building is part of a group of 4 inter-connecting buildings (known as Buildings 115, 115A, 198 and 204) equaling approximately 61,100 SF.
   a. The Training Building (Building 115 and 115a) currently houses offices and administrative spaces, retention offices, classrooms, library, assembly hall, toilets, general storage, and building support functions. The Training Building is approximately 34,500 SF of the facility.
   b. All interior, non-load bearing partitions can be removed to allow for a modified arrangement of spaces. Refer to 5.2.A and Appendix ‘B’ for the functional space details.

B. OMS (Refer to Part 5 of this Section 01010 for detailed information)
1. The existing OMS Building is contained in Building 198, which is connected to the Training Center. Building 198 is approximately 9,600 SF of the facility and is provided with five maintenance bays, shop offices and a toilet.
   a. All interior, non-load bearing partitions can be removed to allow for a modified arrangement of spaces. Refer to 5.2.A and Appendix ‘B’ for the functional space details.

C. Unit Storage (Refer to Part 5 of this Section 01010 for detailed information)
1. The existing Unit Storage is contained in Building 204, which is connected to the Training Center. Building 204 contains approximately 16,000 SF of the facility.
   a. The Unit Storage currently houses unit storage cages, staging area, toilets, two existing arms vaults, a rifle range, and building support functions.
   b. All interior, non-load bearing partitions shall be removed to allow for a modified arrangement of spaces. Refer to 5.2.A and Appendix ‘B’ for the functional space details.

Amendment #1

PART 2 - REQUEST FOR PROPOSAL (RFP) DESIGN DOCUMENTS

2.1 DOCUMENTS INCLUDED

A. The following design documents are included as a part of this RFP, as references, to provide information and criteria for the D/B Contractor's completion of the design:

1. The existing drawings of the Caven Point USARC exist on a CD entitled "Caven Point USARC Existing Drawings" which is included as an Appendix to the final RFP. The D/B Contractor is responsible for field verification of the existing drawings before relying on them.

2. The RFP requirements shall be used in conjunction with other information derived from the Referenced Standard Army Guide Documents to define the functional and aesthetic Project Design / Build requirements. The project design as presented in this RFP shall be used without modification, except as allowed herein. The D/B Contractor shall be responsible for the design and coordination necessary to provide a complete and useable facility in accordance with the RFP requirements. The RFP design documents are not intended to be construction documents. It is the D/B Contractor's responsibility to investigate the RFP requirements, including existing field conditions, and independently further develop the design to sufficiently prepare a proposal and later construction documents, with the involvement of their subcontractors and architect/engineers/designers.

PART 3 - GENERAL PROJECT REQUIREMENTS

3.1 GENERAL REQUIREMENTS

A. This Project consists of design restoration/renovation/construction and demolition of portions of an existing Army Reserve Center complex, affecting all four buildings, site, pavement, and site utilities. The Project shall be designed and constructed using English units of measurement.

B. The complete RFP package constitutes the Project requirements. The requirements of these documents are minimum standards and may be exceeded by the D/B Contractor. Deviations from the requirements of these documents may be approved if considered by the Government to be in their best interests. The extent of development of these requirements in no way relieves the D/B Contractor from the responsibility for completing the design, construction documentation, and renovation/construction of the facility in conformance with applicable criteria and codes.

C. The D/B Contractor shall prepare a 30% Design submittal including, but not limited to, conceptual design drawings. The D/B Contractor's designers shall develop the approved conceptual design in their completion of the 80%, 95% and ultimately the construction documents. Such development shall be consistent with the criteria and acceptable to the Government. All new construction building gross floor areas may not increase in size without Government approval.

Amendment #1

D. The D/B Contractor shall accommodate minor site and building plan changes by the Government in the early stages of the design process, as a normal part of the design development process. The D/B Contractor may adjust spaces, within the overall and specific function area guidelines, as required or as necessary to provide adequate space for mechanical, electrical and communication spaces. The mechanical and electrical spaces must provide adequate space to safely and efficiently accommodate equipment operation and maintenance and replacement. Clearance around electrical equipment shall be in accordance with Article 110 of the NEC. Provide separate environmentally controlled spaces for telecommunication equipment.

E. The Technical Specifications Divisions 2 through 16 is provided in outline format. They shall be utilized as design criteria and minimum standards for the corresponding renovation/construction work, and shall be met or exceeded unless the D/B Contractor obtains specific Government approval for proposed reductions. These outline specifications contained in this package serve as a guide. The intent is to convey the Government's minimum requirements and level of established quality. The D/B Contractor is to maximize the use of product cut sheets and notes placed on design drawings, identifying significant elements and equipment designations. All sections provided may not be used, and the D/B Contractor's architect/engineers/designers shall provide to their subcontractors any additional direction or specification items or sections if necessitated by their final design or RFP requirements. The standards referenced in the outline specification establish minimum requirements for the final construction.

F. Where Technical Specification Sections are more complete, these represent the Government's more exact preferences for this project. The D/B Contractor's architect/engineers/designers must still take complete responsibility for the design and specification of the project, and shall satisfy themselves that these sections are complete and suitable for reference by the subcontractors. Outline specification sections are from the typical Government Unified Facility Guides Specifications (UFGS) or from AIA RPX, with adaptations to reflect Army Reserve-approved approaches and products. They shall be used as the basis for selection of construction materials, products, and systems.

G. The D/B Contractor's architect/engineers/designers shall present drawings, material "cut sheets", design analysis and Structural Interior Design (SID) that will present enough information to satisfy the design submittals requested for Government approval. The individual drawings for all disciplines other than interior design shall adhere to the WI 06-01-02, Louisville District Design Guide (LDDG). The interior design drawings are to adhere to the MDS submittal requirements rather than the LDDG submittal requirements.

H. Products and materials shall be specified directly on the drawings or in a product cut-sheet notebook that shall be provided in a comprehensive Construction Specifications Institute (CSI) format. The D/B contractor's brand and model selections, where appropriate, shall be specifically stated. The D/B Contractor shall follow the manufacturer's installation requirements and adhere to standard construction practices. If during the course of construction, there is a need to deviate from the products and materials specified on the D/B drawings or product cut-sheet notebook, the D/B Contractor shall indicate the new products to be used, furnish the appropriate product data and verify with the Architect / Engineer / Designer that these new products meet or exceed the Modular Design System (MDS) standards as embodied in UFC 4-171-05 Design: Guide for Army Reserve Facilities, dated 1 Nov 2003. The Contracting Officer for the Government shall have final approval authority for deviation of products.

Amendment #1

I. The D/B Contractor is responsible for the design, specification, coordination, purchase and installation of the project fixtures and equipment, unless noted as Government-furnished, Government-installed (GFGI).

J. The D/B Contractor's interior designer shall develop the Comprehensive Interior Design (CID) Furniture packaged outlined in Appendix G. The furniture package shall be Government Furnished/Government Installed (GFGI. The contractor is responsible for coordination of installation with existing and new building utilities and associated subcontractors.

K. The D/B Contractor's architect / interior designer shall develop the final palette of colors and materials for the building's interior and exterior, and shall coordinated selections throughout design. The D/B Contractor's interior designer is also to be responsible for the design, layout, color, finish, material and fabric selection of the facility's furniture package, which may be procured and installed by the Government. The D/B Contractor is also responsible for the electrical connections and telephone / data distribution with the systems furniture workstations. The palette of colors and materials shall be submitted and reviewed by the client/end users per the submittal matrix provided by the project manager using the MDS Design Process and Submittal Requirements for Structural Interior Design (SID).

L. The D/B Contractor is responsible for coordinating work associated with the connection of power and communications to the panel-based systems furniture workstations and/or the metal desk-based furniture once it is installed. The D/B Contractor's interior designer shall base and/or closely align the design of the office and unit common workstation furniture on previous studies conducted by the Louisville District COE as detailed in Appendix "G" of this Section 01010 and in UFC 4-171-05 Design: Guide for Army Reserve Facilities, dated 1 Nov 2003. All materials, fixtures, equipment, systems, etc. to be used in the construction of this project shall be new, and purchased for the purpose of constructing this facility.

3.2 APPLICABLE CODES AND CRITERIA

A. In order for a facility to be occupied by Department of Defense personnel, the design and construction must meet specific requirements. The Government's primary guidance on building codes, fire protection and life safety is UFC 1-200-01, 31 July 2002, "Design: General Building Requirements". Design and construction of AR real property improvements shall comply with UFC 1-200-01 and shall comply with the specific applicable requirements of IBC, NFPA 101, UFC 3-600-01 and other commercial codes and standards that are referenced in UFC 1-200-01. The D/B Contractor shall complete a Fire Protection/Life Safety Code Submittal for the project to demonstrate compliance. Refer to the Appendix D of this Section 01010 for a copy "Draft" of the Government format for Fire Protection/Life Safety Code Submittal.

1. The D/B Contractor and their architect/engineer/designer will be the Architect/Engineer of Record for this project. The D/B Contractor's building design will need to address how they will deal with the applicable code requirements. Compliance of existing construction to remain shall be in accordance with Life Safety Code for "Existing Buildings". New work and features shall comply with new construction requirements.

B. Design and construction of AR real property improvements shall also comply with the requirements of this document and with the current edition of the industry and Federal

Amendment #1

Government standards listed in the following table. Where UFC 1-200-01 or any other Federal Government standard refers to other Federal Government standards not listed in the following table, the standards not listed do not apply.

C. Some state and local code and regulatory agencies may not have jurisdiction over Federal Government construction on Federal property. The design and construction of AR real property improvements shall comply with all current and applicable State of New Jersey and local City of Jersey City and Hudson County codes, and with all other applicable laws and regulations governing development, design and construction at the site.

D. Where any of the applicable requirements conflict, the most stringent shall govern. In no case shall building code, fire protection and life safety requirements be reduced below those required in UFC 1-200-01 and this document.

All Design Disciplines	
ADA-AG	Americans with Disabilities Act – Accessibility Guidelines
AR 190-11	Physical Security of Weapons, Ammunition, and Explosives
ASHRAE 90.1-2001	Energy Standard for Buildings Except Low-Rise Residential Buildings
IBC	International Building Code, 2000
IMC	International Mechanical Code 2000
UFC 1-200-01	Design: General Building Requirements
UFC 3-310-01	Load Assumptions for Buildings, 2000
UFC 3-400-01	Design: Energy Conservation
UFC 3-600-01	Fire Protection Engineering for Facilities
UFC 4-010-01	Department of Defense Minimum Antiterrorism Standards for Buildings, dated 8 October 2003
UFC 4-171-05	Design: Guide for Army Reserve Facilities, dated 1 November 2003
UFAS	Uniform Federal Accessibility Standards, 1984
ASCE 7-98	Minimum Design Loads for Buildings and Other Structures
ECB 2003-20	Engineering and Construction Bulletin, Sustainable Project Rating Tool
NFPA 30A	Code for Motor Fuel Dispensing Facilities and Repair Garages, dated 7 August 2003
NFPA 101	Life Safety Code 2003 Edition
MDS	Modular Design System: USAR Design Process and Submittal Requirements See web site: http://bc.cecer.army.mil/mds/
WI 06-01-02	Louisville District Design Guide (LDDG) 2 Feb 1995 with updates thru Rev. 3. http://www.lrl.usace.army.mil/ed/lddg.pdf
SPiRiT v. 1.4.1	Sustainable Project Rating Tool www.cecer.army.mil/SustDesign
WI-06-01-02	Louisville District Design Guide (LDDG), 2 Feb 1995, with changes through Rev 3

Amendment #1

	http://www.lrl.usace.army.mil/ed/LDDG.pdf
* All standards referenced in the outline specifications of this RFP.	
Civil/Site	
TM 5-822-2	General Provisions and Geometric Design for Roads, Streets, Walks and Open Storage Areas
TM 5-822-5	Pavement Design for Roads, Streets, Walks and Open Storage Areas
TM 5-822-7	Standard Practice for Concrete Pavements
TM 5-822-8	Bituminous Pavements: Standard Practice
No number	State of New Jersey Department of Transportation
Architectural/Interior Design	
AR 190-51	Security of Unclassified Army Property
ASHRAE Standard 90.1-2001	Standard 90.1-2001 -- Energy Standard for Buildings Except Low-Rise Residential Buildings (Continuous Maintenance Standard)
* Those listed under "All Design Disciplines" above.	
Structural	
ACI 318	American Concrete Institute - Building Code Requirements for Reinforced Concrete, 1999
AISC 316	American Institute of Steel Construction - ASD Manual of Steel Construction, Ninth Edition
AISC 325	American Institute of Steel Construction - LRFD Manual of Steel Construction, Vol. 1 & 2, Third Edition
AISI	Cold Formed Design Manual, 1999
NDS	National Design Specification for Wood Construction, 1997 Edition
TI 809-05	Seismic Evaluation and Rehabilitation for Buildings
FEMA 310	Handbook for the Seismic Evaluation of Buildings – A Prestandard
FEMA 356	Prestandard and Commentary for the Seismic Rehabilitation of Buildings
ICSSC RP6	Standards of Seismic Safety for Existing Federally Owned and Leased Buildings, January 2002
* Those listed under "All Design Disciplines" above.	
Mechanical/Plumbing	
UFC 3-400-02 28 February 2003	Engineering Weather Data
NFPA 13	Standard for the Installation of Sprinkler Systems 2002 Edition
NFPA 14	Standard for the Installation of Standpipe and Hose Systems 2003 Edition
NFPA 17A	Standard for Wet Chemical Extinguishing Systems 2002 Edition
NFPA 20	Standard for the Installation of Stationary Pumps for

Amendment #1

	Fire Protection 2003 Edition
NFPA22	Standard for Water Tanks for Private Fire Protection 2003 Edition
NFPA 24	Standard for the Installation of Private Fire Service Mains and Their Appurtenances 2002 Edition
NFPA 90A	Standard for the Installation of Air-Conditioning and Ventilating Systems 2002 Edition
NFPA 54	ANSI Z223.12002 National Fuel Gas Code 2002 Edition
NFPA 96	Standard for Ventilation Control and Fire Protection of Commercial Cooking Operations
ANSI/ASHRAE 15-1994 (Latest Edition)	Standard 15-2001 -- Safety Standard for Refrigeration Systems (Continuous Maintenance Standard)
ASHRAE Standard 62-2001 (Latest Edition)	Ventilation for Acceptable Indoor Air Quality
IPC	International Plumbing Code 2000 Edition
* Those listed under "All Design Disciplines" above.	
Electrical	
EIA/TIA 568-B Parts 1 and 2, 20001	Commercial Building Telecommunications Cabling Standard
EIA/TIA 569-A, 2001	Commercial Building Standard for Telecommunications Pathways and Spaces
EIA/TIA 606, 1996	Administration Standard for the Telecommunications Infrastructure of Commercial Buildings
EIA/TIA 607, 2002	Commercial Building Grounding/Bonding Requirements Standards
NFPA 70	National Electrical Code® 2002 Edition
NFPA 72	National Fire Alarm Code® 2002 Edition
NFPA 101	Life Safety Code 2003 Edition
ANSI A17.1	Elevator Code
ANSI C2	National Electrical Safety Code 2002 Edition
MIL HDBK 1012/3	Telecommunications Premises Distribution - Planning, Design, and Estimating
UFC 4-021-01	Design and O&M: Mass Notification Systems
* Those listed under "All Design Disciplines" above.	
Landscape Architecture	
Those listed under "All Design Disciplines" above.	

E. The primary criteria and guidance for detailed design of Army Reserve Training Centers is UFC 4-171-05 Design: Guide for Army Reserve Facilities, dated 1 Nov 2003. The D/B Contractor shall follow the guidance of UFC 4-171-05 in developing the project design, unless this RFP directs otherwise. When the UFC 4-171-05 references Government criteria documents not included in the list above, those criteria do not apply to this project.

Amendment #1

F. The requirements of the International Mechanical Code (IMC) shall apply except as follows. Where conflicts exist between the IMC and the requirements of this document, this document shall govern. Where the IMC references the ICC Electrical Code, the NEC National Electrical Code shall be the applicable code. Where the IMC references the International Gas Code, the NFPA 54 National Fuel Gas Code shall be the applicable code. Where the IMC references the International Fire Code, the National Fire Codes published by the National Fire Protection Association (NFPA) shall be the applicable code. Where the IMC references the International Energy Code, the ASHRAE Standard 90.1 Energy Standard for Buildings – Except Low Rise Residential Buildings shall be the applicable reference.

G. The Government criteria listed above may be found at the following web sites:
1. TM and UFC – http://www.hnd.usace.army.mil/techinfo/engpubs.htm
2. DG and USAR Design Process and Submittal Requirements – http://bc.cecer.army.mil/mds/
3. AR –– search using the first 3 digits following the AR designation. – www.usapa.army.mil/USAPA_PUB_search_P.asp

H. Energy and Resources Conserving Features – Public Law 102-486, Executive Order 13123, and Federal Regulations 10 CFR 435 require Federal buildings to be designed and constructed to reduce energy consumption in a life-cycle, cost-effective manner using renewable energy sources when economical. Products designed to conserve energy and resources by controlling the amounts of consumed energy or by operating at increased efficiencies shall be considered.

I. Energy conservation techniques shall be considered as they relate to site design, site engineering, building design, and building engineering. Techniques that conserve energy, improve functionality, and can be justified by life cycle cost analysis as cost effective are encouraged. Integration of energy conservation systems with the building design (lighting, structure, mechanical systems, and aesthetics) is essential to facilitate functionality and maximum energy savings.

J. Sustainable Design – This project shall incorporate as many SPiRiT points as possible during the design of this renovation. The D/B Contractor shall discuss possible SPiRiT points in a “SPiRiT Design Analysis” which shall be an Appendix to the written Design Analysis requirements. The D/B Contractor will design this project to achieve a “Bronze” level in the SPiRiT rating system.

K. Accessibility – Design and renovation/construction must comply with ADA-AG and UFAS.

PART 4 - SITE/CIVIL DESIGN AND CONSTRUCTION REQUIREMENTS

4.1 GENERAL

A. This section identifies the items required for the site/civil evaluation, repair, modification, rehabilitation and replacement. This does not preclude the D/B Contractor from making improvements to the design so long as such improvements are consistent with the criteria herein and acceptable to the Government. Items requiring work are presented in general descriptive form herein. The D/B Contractor shall finalize elements of the design including

exact dimensions and materials to be incorporated in the construction. Irrespective of whether or not a particular item in the Part 4 text is specifically mentioned as a responsibility of the D/B Contractor, the D/B Contractor shall be responsible for its design and construction.

4.2 FIELD VERIFICATION OF EXISTING CONDITIONS

A. The Boundary and Topographic survey and Utility surveys and verification have currently not been conducted and are the requirement of the D/B Contractor. **A geotechnical survey and report has been included as Appendix J.** The D/B Contractor is responsible for field verifying the existing conditions before starting work. Additional topographic and geotechnical surveys are the responsibility of the D/B Contractor.

B. The D/B Contractor shall obtain additional geotechnical investigation as necessary to establish soil characteristics for:
1. Additions (if any) to the Training Buildings or OMS
2. MEP parking areas, POV parking area
3. Utilities
4. Drainage systems
5. Cathodic protection design, if required, for new fire protection water service, water service, and other metallic buried piping and conduit systems.
6. Seismic design

C. The D/B Contractor and their architect/engineers/designers shall be responsible for investigating the existing site conditions and issues that are encountered during the design and construction process. The architect/engineers/designers of record shall be responsible for providing guidance to the D/B Contractor for the resolution of all such issues. The D/B Contractor shall provide notice to the Government of any such issues prior to proceeding with sufficient time to avoid or minimize cost or schedule impacts.

D. The D/B Contractor and their architect/engineers/designers of record shall be responsible for verifying the condition, location and capacity of water, sanitary sewer and natural gas utilities necessary for this project. The D/B Contractor and their architect /engineers/ designers of record shall further verify and submit a report to the Contracting Officer that all utilities as noted above will meet the requirements for this project.

1. Water Service – The D/B Contractor is responsible for upgrading and replacing the existing exterior water system. The system is owned and maintained by the Caven Point USARC. Water is supplied to the site through a 16 inch looped water main from United Water from Jersey City. There are two fire hydrants, one fire sprinkler PIV, and several water valves located on the site. The size, location and condition of the existing on-site water lines are unknown. The user of the Caven Point USARC has complained of odors and discoloration of the building water supply. The D/B Contractor will be responsible for verifying the size, location, capacity and adequacy of the existing system. It is assumed that all the existing on-site water system will be replaced. **A water supply flow test has been performed and is included as Appendix E.** The existing system is in excess of 50 years old: Refer to paragraph 4.10 of this Section for additional information and requirements.
2. Sanitary Sewer – The existing on-site sanitary sewer system consists of building service laterals, cleanouts, manholes and sewer lines all draining to a sewage pump

station located in the southwest corner of the site. The sewage is pumped through a force main along Caven Point Road where it discharges into the sewage collection and treatment system operated by Jersey City, New Jersey. It is the responsibility of the D/B Contractor to verify the location of all on-site sewer facilities. The entire on-site sewage collection system, including the pump station, will be replaced. The existing system is in excess of 50 years old: Refer to paragraph 4.11 of this Section for additional information and requirements.

3. Natural Gas—Natural gas is supplied to the Caven Point USARC from off-site distribution mains from Public Service Electric & Gas Company. The gas service was installed at Caven Point approximately 11 years ago. The gas meter and regulator are located in the front center portion of the Training Building. The location, size and material types of the gas main are unknown. The D/B Contractor shall verify the location, size and adequacy of the existing on-site gas system. Refer to paragraph 4.13 of this Section for additional information and requirements.

E. The Government's primary guidance on physical security is Unified Facility Criteria (UFC) 4-010-01, DoD Minimum Antiterrorism Standards for Buildings, dated 8 October 2003. Site and building design shall comply with its requirements. The threat assessment for the site has not been provided, but is assumed to be "low." The existing POV parking lot does not meet current DoD AT/FP standards and must be moved away from the Training Building. A complete new POV parking lot to accommodate a minimum of 160 parking spaces shall be provided and shall meet the DoD Minimum Antiterrorism Standards.

4.3 SITE DEVELOPMENT COMPLIANCE REQUIREMENTS

A. The D/B Contractor will ensure that the site development and all work comply with the applicable, Federal, State, and County requirements.

4.4 DESIGN / BUILD (D/B) CONTRACTOR'S USE OF THE SITE

A. Training Center and POV Area - Except as required for utility service provider access, and for observation and oversight by the AR, COE and any possible local regulatory officials, the D/B Contractor shall have complete use of the Training Center building, the attached OMS and Unit Storage wings and the POV portion of the site. The D/B Contractor will coordinate his activities with those of the Army Reserve.

B. OMS Building and MEP Area - Except as required for utility service provider access, and for observation and oversight by the AR, COE and any possible local regulatory officials, the D/B Contractor shall have complete use of the OMS building and the MEP area. The D/B Contractor will coordinate his activities with those of the Army Reserve.

4.5 HAZARDOUS MATERIALS

A. If known or suspected hazardous materials are discovered in the course of design or construction, the D/B Contractor shall immediately notify the Government, suspend work in the area of the hazardous materials, and await the Contracting Officer's direction.

Amendment #1

B. The D/B Contractor shall request that the Government supply the reports and abatement records to date.

C. The existing gravel MEP parking area along the western portion of the site adjacent to Caven Point Road contains old asbestos shingle construction demolition debris. This material shall not be excavated or removed from the project site. Fill material in the form of additional aggregate surface may be placed over the top of this area.

4.6 SITE DEMOLITION

A. It is anticipated that the majority of the demolition will be incidental to and as necessary to further the restoration works.

B. Demolition associated with the removal and replacement of the exterior water and sewer system is required, including manholes, valves, fire hydrants and the existing sewage pump station.

C. Minor fence demolition is required for the new entrances to the facility.

D. The existing wash rack is to be removed and replaced as an option to this RFP. Refer to Section 01011 for the Options and their descriptions.

4.7 SITE PLANNING

A. The existing Caven Point USARC site has already been developed fully, however some minor revisions are required. At present, all traffic enters and exits the facility by a single access near the southwest corner of the facility off of Pier Road. In order to separate the MEP traffic and the POV traffic, as well as meet current AT/FP requirements, the existing Pier Road access will be for MEP traffic entering and leaving the site. This entrance will normally be closed. A new motor operator will be added to the existing sliding gate, and a remote keypad gate operator and intercom will be provided. A new second entrance for POV traffic will be provided east of the existing entrance off Pier Road. A portion of the existing fence along Pier Road will be removed and new gates and fencing will be provided. This entrance will normally be open during normal working hours and closed each evening. Remote keypad operators and intercom will also be provided for this gate.

B. The new entrance off Pier Road must be coordinated with and approved by Jersey City.

C. The D-B Contractor will confirm with the Army Reserve the current analysis that the existing division of the site between MEP and POV is suitable for the future and that no expansion of the site's area at present under asphalt is required. The D/B Contractor shall provide POV parking for a minimum of 80% of the largest drill weekend and will confirm the actual number of parking spaces with the Army Reserve.

D. The restoration is to conform to UFC 4-010-01 DoD Minimum Antiterrorism Standards for Buildings.

E. The site must meet current ADA and handicap accessible requirements.

Amendment #1

4.8 PAVING AND SIDEWALKS

A. At present the site is accessed from a single un-manned gate off Pier Road near the southwest corner of the Caven Point USARC. Existing POV parking is along the front of the entire southern side of the training building. Existing MEP parking is provided in several gravel and bituminous lots along the western and northern portions of the site. The existing MEP lots generally have interior fencing and gates limiting access to the lots.

1. All the site asphalt to remain shall be milled if needed, cleaned, cracks sealed and provided with a bituminous overlay. The intent is to provide a 30-year lifetime for the resulting asphalt pavement. This asphalt shall be striped for parking of military vehicles based upon layouts provided by the Army Reserve.
2. The existing gravel fenced MEP lot along the western border of the site adjacent to Caven Point Road will not be disturbed. The existing gravel is contaminated with remnants of asbestos shingles and cannot be excavated and the material cannot be removed from the site.
3. The existing gravel MEP lot in the rear (northern) portion of the facility and east of Building 199 will be provided with new stone base and bituminous surface.
4. A new reinforced concrete apron will be provided along the western side of the existing OMS Vehicle Maintenance Building.
5. A new bituminous paved POV parking lot will be provided in the vacant grassy area in the southeastern portion of the site adjacent to Pier Road. A new sidewalk will be provided along the edge of the parking lot. New nine inch high concrete curb will be provided along the edge of the parking lot to serve as a barrier between the POV lot and the Training Building. The POV parking lot will be striped. Handicap accessible parking spaces, signs, and pavement markings will be provided.
6. A portion of the existing parking along the front of the Training Building will be removed. The area between the new POV parking lot and the existing Training Building will be provided with raised landscape berms.
7. Where necessary to create proper drainage, the site shall be regraded and the asphalt replaced entirely.
8. Where disturbed by new utilities trenching, the site shall be regraded and the asphalt replaced entirely.

B. OPTION: A new bi-level concrete MDS standard loading ramp shall be provided as an Option to this RFP in the rear MEP parking lot. Refer to Section 01011 for Option descriptions and requirements.

C. The existing sidewalks and exit stoops are to be replaced and where necessary new ones to suit the access patterns between the parking and the buildings will be installed.

D. An ADA/UFAS standard handicap access route between the POV and the entrance is to be provided, along with sufficient signed handicap accessible parking spaces.

E. OPTION: A concrete pad for a mobile kitchen shall be provided as an Option to this RFP. Refer to Section 01011 for additional requirements.

4.9 GRADING AND DRAINAGE

A. Portions of the existing site are very poorly drained with standing water after rainfall events. The current overall site drainage pattern within the paved portions of the site collects the

runoff in catch basins that direct the storm drainage to the northern end of the site into an adjacent swampy, wetland area. Areas in the southeastern portion of the site along Pier Road drain easterly to the adjacent development. Drainage from this area is very poor.

B. The restoration of this facility will address problems with the site grading. Where possible, re-grading or fill will be provided to prevent standing water in paved areas. Additional catch basins and area inlets will be provided and connected to the existing on-site storm drainage system.

C. Some of the existing curb inlets surrounding the training building are in disrepair. All inlets shall be either replaced or inspected and repaired. The D/B Contractor will implement the storm water quantity and quality requirements of the authority having jurisdiction.

D. The D/B Contractor will review all of the site's existing surface drainage and adjust it to provide effective low maintenance drainage. Some elements of this drainage are the various ditches that might require re-grading. In addition the D/B Contractor will ensure that all downspouts are connected to the storm drainage system.

E. The D/B Contractor shall verify and ensure that the condition, location, and capacity of the underground storm drainage piping is adequate for the facility and its continued operation at the current level for the next 30 years.

F. The D/B Contractor will replace all tailed joints in curbs and gutters and any tailed sections of curb and gutter.

4.10 WATER SUPPLY

A. An inspection of and report on the potable water system has been commissioned but is not yet available. The report will be provided as an Amendment to the D/B Contractor. The D/B Contractor will determine the fire protection requirements for the site and buildings and provide a water system with the pressure, the flow rate, and the water storage sufficient to meet the requirements, see paragraph 5.4F of this Section. All the water piping on-site and the fire hydrants will be replaced and fire service lines to the buildings will be installed. The design of the potable and fire service lines will be such that the operation of one does not cause the other to fail. Furthermore the design will incorporate devices such as RPZ backflow preventers so as to isolate the potable water from the fire service water.

4.11 SANITARY SEWER

A. All the existing sanitary sewage pipes on site between the buildings and the sewage pump station will be replaced. The sewage pump station shall also be replaced. The D/B Contractor will determine the average flow rates of the existing sewer system by performing draw-down tests on the existing pump station, and metering the pumps to determine how long and how many cycles per day are being used. Sewers shall be designed in accordance with TM 5-814-1. Force mains and the pump station shall be designed in accordance with TM 5-814-2.

B. There is an existing two-space wash rack on the western portion of the site near the OMS maintenance portion of the building. The wash rack and adjacent oil/water separator will be

replaced as an Option to this RFP. Refer to Section 01011 for additional descriptions and requirements.

4.12 SITE ELECTRICAL POWER AND LIGHTING

A. The D/B Contractor will verify the condition of the site electrical power system and implement such works as necessary to ensure its compliance with the relevant codes and regulations. The D/B Contractor shall verify and ensure that the condition, location, and capacity of the electrical power system is adequate for the facility. The contractor shall coordinate all electrical service requirements with PSE&G. The 3 incoming secondary feeds from the 500kva pad-mount transformer shall be demolished. A new secondary service shall be extended into the building from PSE&G's service transformer. If multiple services are provided, all provisions in the National Electrical Code for multiple services must be met and coordinated with PSE&G. Contractor shall submit a load summary (in a PSE&G approved format) to PSE&G and shall coordinate connections to the existing transformer, or new transformer in the existing location, or a new transformer in a new location, per PSE&G direction. Contractor shall pay all fees associated.

B. All the existing site lighting is to be removed and replaced with new lighting to current Army Reserve Design Guide standards and levels. Additional lighting may be required to meet the Army Reserve Design Guide criteria. The site lighting will be designed and constructed so that " light trespass" and disturbance to the facility's neighbors is minimized by the use of techniques such as placing the lights on the perimeter and directing them to point inward.

C. The existing sliding gate off of Pier Road for MEP parking shall be equipped with a motor operator, along with a remote keypad gate operator (at gate pedestal) and intercom (at gate pedestal and in the building), and a gate release push button adjacent to the interior intercom station. A new second entrance for POV traffic will be provided east of the existing entrance off Pier Road and it will be equipped with a motor operator, remote keypad operator and intercom. The D/B Contractor shall provide power to the gate motor operator and shall provide controls conduit, wire, and power (as required) for the remote keypad and intercom. The D/B Contractor shall also provide loop detectors and wiring between loop detector and motor operator. The D/B Contractor shall coordinate location of interior intercom and push button with the owner.

D. The existing flagpole at the entrance to the Training Facility shall be lighted with industry standard flagpole lighting fixtures, such as, in-grade or small spot flood types.

E. Demolish existing electrical service to the existing Lift Station and replace with a new electric service to handle load of new lift station.

4.13 NATURAL GAS

A. The D/B Contractor will verify the heating loads of the facility. The D/B Contractor shall contact Public Service Electric & Gas to determine size of line and pressure to the building. The D/B Contractor shall verify the size and pressure to the facility is adequate for the anticipated loads. If not, the lines shall be replaced.

Amendment #1

B. The D/B Contractor shall ask the Army Reserve to provide a copy of the documentation for the heating oil tanks that were removed after the natural gas was installed. The gas regulator outside the training building's mechanical room presents an unattractive appearance and shall be either relocated or screened. Screening shall be an attractive painted wood or brick wall placed in front of meter/regulator so that they are completely hidden.

4.14 FENCING

A. The existing chain link fence appears to be positioned on the property boundary of the site. The existing fence and gate along Pier Road shall be maintained. A new motor operator will be provided for the sliding gate. A remote keypad and intercom will be provided at the gate.

B. A new motorized sliding gate will be provided along Pier Road for the new POV parking lot. The new gate will be provided with a keypad operator and intercom.

C. The existing fence perimeter fence is assumed to be adequate and will not be replaced except as noted above.

4.15 LANDSCAPING

A. For ease of maintenance turf grass is the preferred cover for all soil areas, although landscape material chosen shall conform to UFC 4-010-01 DoD Minimum Antiterrorism Standards. This will include groundcovers, perennials, and low-growing shrubs. Except for turf grass, all landscaping shall be an Option to this RFP. Refer to Section 01011 for additional requirements for landscaping option. All landscape items shall be low-maintenance and not cause any unnecessary maintenance burden for their proper care and cleanup. Raised landscaped berms will be provided between the POV parking lot and the Training Building to better provide a buffer area for aesthetics as well as antiterrorism protection.

B. The D/B Contractor will provide at least two screened dumpsters on concrete pads, consideration shall be given to access from the kitchen, access by the garbage removal truck, aesthetics, and UFC 4-010-01 DoD Minimum Antiterrorism Standards for Buildings.

C. The facility sign is to meet the current standard. The facility sign shall be of materials coordinating with the exterior materials of the existing buildings. **Refer to Appendix L for sketch of facility sign.** Minimal landscaping shall be provided around the base of the new sign.

4.16 ENVIRONMENTAL PERMITS/REGULATORY REQUIREMENTS

A. Permits shall be the responsibility of the D/B Contractor.

B. The D/B Contractor will be responsible for obtaining all permits, fulfilling the regulatory requirements, paying fees and providing and completing a permit chart.

C. The D/B Contractor shall ask the Government to supply the reports containing the removal of the underground oil tanks from the site.

PART 5 - GENERAL DESIGN AND CONSTRUCTION REQUIREMENTS

5.1 GENERAL CRITERIA

A. This RFP presents a scope of work along with space requirements and references to the Army Reserve guidelines having the approval of the Government. This does not preclude the D/B Contractor from making improvements to the design as long as such improvements are consistent with the criteria and acceptable to the Government. The D/B Contractor shall utilize this RFP to create design drawings leading to Contract Documents.

B. This RFP and its referenced documents define the necessary criteria to plan, design and renovate this existing Army Reserve Training Center facility. Functional space requirements, including general lighting, power, tempered air requirements, and finishes, are contained in UFC 4-171-05 Design: Guide for Army Reserve Facilities. The D/B Contractor's architect/designers shall adapt these to the design and final construction documents and the floor and furniture plan layouts.

C. Design documents shall be produced using AutoCAD, version to be determined by 77th RRC. Any and all translations are the responsibility of the designers, and the designers must have in place a Quality Control procedure to assure the translations are complete and accurate and meet the current technology of CADD. If translations are used, all drawings for the submittals shall be plotted from the translated files.

D. The outline technical specification divisions 2 through 16 shall be used as the basis for renovation/construction products. The D/B Contractor's architect/designers shall address as per Article GENERAL REQUIREMENTS of this Section.

E. The D/B Contractor's architect/interior designers shall develop a Comprehensive Interior Design (CID), which includes both Structural Interior Design (SID) and finishes, patterns and colors for furnishings, for approval by the Government. The SID finish and color palette shall include exterior and interior finish, patterns, colors and specialty items, including doors and doorframes, and shall be coordinated with the CID furnishing finishes, patterns and colors.

F. Functional space requirements are noted in Article ARCHITECTURAL below; the D/B Contractor's architect/designer shall coordinate the layout with the Government. The D/B Contractor shall develop a new plan layout in conformance with the requirements of this RFP and UFC 4-171-05, for the approval of the Government.

G. Provide the design and finishes for furniture in all spaces as per Article GENERAL REQUIREMENTS of this Section 1010; Appendix G to this Section 01010: and as posted on the MDS web site.

H. Where the D/B Contractor is to provide schedules, labeling or key plans (for signage, door hardware lockset keying, electrical panel schedules, communications/data wiring, etc.), the

Amendment #1

D/B Contractor shall use final room numbers if different from the Construction Document room numbers.

I. Provide ADA access at entrance to Building 115A, Training Building
   1. Provide ramp complying with ADA and IBC
   2. Ramp shall compliment the present entry
   3. Ramp shall not alter the current function of the entry

J. Addition of an Elevator and Elevator Machine Room to Training Building
   1. Comply with ADA
   2. Elevator to be dual-use freight/passenger.
   3. Shall be located on the East side of connector between buildings 115 & 115A. Exact location to be determined by the D-B Contractor.

K. Provide an additional emergency exit stair to meet IBC and Life Safety Code
   1. Provide covered exterior metal stair, handrails and guardrails.
   2. Install metal door to access the new stair.
   3. Access shall be from corridor 222.
   4. The stair shall be located on East side of building 115.
   5. Storage room 212 shall become the path of egress to exit stair.
   6. The interior door to storage room 212 shall be removed.
   7. Protect roof of existing corridor 119 during construction.

L. Exterior Design
   1. Patch and repair all areas of E.I.F.S. that has been damaged.
   2. Clean the exterior wall surfaces.
   3. Replace sealant at the joints between all E.I.F.S. panels.
   4. Reseal joints in all control and expansion joints.
   5. Clean and reseal existing glass block.
   6. Remove overhead doors as identified in Functional Space Requirements table. Infill with wall system consisting of CMU backup faced with E.I.F.S. Infill shall be as seamless as possible.
   7. OPTION: The contractor shall redesign the entrance of building 115 as an Option to this RFP. Refer to Section 01011 for additional requirements.

M. Roof:
   1. Provide new 2 ply modified roof system including new insulation to existing roof deck after removing the existing roofing membrane and insulation.
   2. Provide new collector heads and downspouts on all buildings.
   3. OPTION: The contractor shall provide a pitched, asphalt, shingled roof for buildings 115, 198 and 204 as an Option to this RFP. Refer to Section 01011 for additional requirements.

N. Existing Doors and Door Frames
   1. Exterior Doors - All exterior doors and associated door hardware are to be replaced on all of the buildings of this facility.
   2. Replace all overhead doors, unless otherwise noted. Provide new electric door operators for each new overhead door and new bollards at the corners of the door openings.
   3. All interior doors, door frames and associated door hardware shall be replaced with new solid core wood doors and metal frames. Door hardware shall be of consistent

style and finish throughout the facility and comply with ADA standards. Glass lights shall be utilized where appropriate. The door on the Arms Vault shall remain in use.

4. Card Key System – A card key system shall be provided at the following new door locations: Training Center Vestibule 1, Vestibule 2, Vestibule 3 and OMS Building Office S-6. The card key system shall conform to the 77th RRC requirements. The card key system should also be compatible with the Bid Option front gate electric control.
5. Door Contact Switches – Shall be provided at all exterior and overhead door locations and shall report to the Card Key System.
6. Cylinders – All lock cylinders are to be Best Lock and conform to the existing 77th RRC facility standards.

O. Windows

1. Replace all windows, unless noted otherwise.
2. Replacement Windows shall comply with DoD Minimum Antiterrorism Standards for Buildings.
3. Replacement Windows shall comply with current energy standards.
4. Weather stripping – All existing weather stripping shall be removed and replaced with new, complying with the manufacturer's installation recommendations.
5. Window Sills – All existing windowsills shall be removed and replaced with new solid surface material, Corian, or equal.
6. Window Blinds – All windows shall be provided with new 1" aluminum horizontal blinds.

P. Interior Renovation

1. Completely remove all interior materials including but not limited to systems furniture partitions, VCT, ACT, grid system for ceiling tile, interior doors and frames, wall base, windowsills and light fixtures.
2. Replace acoustical ceiling system with new ACT and grid system throughout. Install ACT and grid system in assembly hall.
3. **Remove existing specialty items and install new items as required in this document** such as building directories, marker boards, bulletin boards, chalk boards, Army and/or unit plaques, etc in location determined by the Interior Designer for the D/B Contractor. Remove any framed photos, re-mat, and frame as needed and re-install in the location decided by the Interior Designer for the Contractor.
4. Evaluate existing hard ceilings for moisture related damage. If damage is not detected, patch, repair and paint existing hard ceilings with a latex semi-gloss paint. If damage is detected, ceilings shall be replaced with cement board if located in restroom and drywall for other locations. All replacement hard ceilings shall be finished and painted with a latex semi-gloss paint.
5. Exposed ceilings containing metal deck and joists shall receive a fresh coat of paint. All exposed wood surfaces including ceiling, deck, and joists shall be cleaned.
6. Patch, repair and paint existing CMU walls.
7. Tie off electric and cap off plumbing
8. OPTION: The contractor is to provide a complete kitchen as an Option to this RFP. Refer to Section 01011 for additional requirements.
9. OPTION: The contractor shall redesign the entrance/lobby of building 115 as an Option to this RFP. Refer to Section 01011 for additional requirements.

Amendment #1

Q. A radon screening was conducted and found to be negligible. Therefore, a radon abatement system is not required.

R. Asbestos & Lead Based Paint Materials
1. The building will be clean of all asbestos materials by the time construction is to start. The 77th has a separate contract for abatement of the asbestos prior to construction.
2. The contractor is responsible for removing materials painted with lead base paint in a safe manner. A lead-based paint survey has been included in this RFP. See Appendix K.

5.2 ARCHITECTURAL

A. Individual spaces shall meet the functional and environmental requirements based on the UFC 4-171-05 paragraphs listed in the table below, as well as any applicable code requirements. Requirements, in addition to those stated in the space requirements column, indicating the design paragraphs in UFC 4-171-05 are noted in the Remarks column.

FUNCTIONAL SPACE REQUIREMENTS

Individual Space Requirements			
Room Num.	**Space Name**	**Space Require-ments**	**Individual Remarks**
	BLDG 115 A TRAINING BUILDING		
101	Classroom	UFC 4.2.13	• Remove and install a new moveable partition • Remove as needed and install new VCT flooring • Refer to PART 5, Article GENERAL CRITERIA
102	Storage		• Remove as needed and install new VCT flooring • Refer to PART 5, Article GENERAL CRITERIA
103	Classroom	UFC 4.2.13	• Remove and install a new moveable partition • Remove as needed and install new VCT flooring • Refer to PART 5, Article GENERAL CRITERIA
104	Stair	UFC 4.2.47	• Install rubber stair tread and landing tile • Remove and install new handrails and guardrails complying with ADA and Life Safety Standards • Refer to PART 5, Article GENERAL CRITERIA
105	Corridor	UFC 4.2.47	• Remove as needed and install new VCT flooring • Refer to PART 5, Article GENERAL CRITERIA
106	Stair	UFC 4.2.47	• Install rubber stair tread and landing tile • Remove and install new handrails and guardrails complying with ADA and Life Safety Standards • Refer to PART 5, Article GENERAL CRITERIA
107	Corridor	UFC 4.2.47	• Remove as needed and install new VCT flooring

Amendment #1

Individual Space Requirements			
Room Num.	**Space Name**	**Space Require-ments**	**Individual Remarks**
			• Refer to PART 5, Article GENERAL CRITERIA
108	Supply Storage		• To be divided • Remove as needed and install new VCT flooring • Refer to PART 5, Article GENERAL CRITERIA
108A	Chair Storage	UFC 4.2.9	o Construct permanent partition walls o Size to be approx. 400 S.F. o Install new VCT flooring o Refer to PART 5, Article GENERAL CRITERIA
108B	Education/Classroom	UFC 4.2.13	o Construct permanent partition walls of gypsum board containing an area of approx. 400 S.F. o Provide video conferencing capability o Install new carpet tile o Refer to PART 5, Article GENERAL CRITERIA
108C	Physical Readiness Rm	UFC 4.2.36	o Construct permanent partition walls containing an area of approx. 1000 S.F. o Add outside entry o Install new carpet tile o Refer to PART 5, Article GENERAL CRITERIA
108D	Locker Room	UFC 4.2.41	o Construct permanent partition walls o Develop plan for new lockers o Install new VCT flooring o Refer to PART 5, Article GENERAL CRITERIA
108E	ADA Unisex toilet	UFC 4.2.40	o Installations shall comply with ADA standards o Install new toilet, urinal and sink o Install new ceramic tile flooring o Install new ceramic tile base o Install cement board ceiling, paint with latex semi-gloss coating. o Install new toilet and urinal partitions. o Install new paper towel dispenser & waste disposal o Install new electric hand dryer o Provide new mirror & soap dispenser o Walls shall be finished with ceramic tile or be constructed of glazed CMU o Refer to PART 5, Article GENERAL CRITERIA
108F	Storage	UFC 4.3.4	o Construct permanent partition walls of gypsum board containing the remainder of the area. o Install new VCT flooring
109	Assembly Hall	UFC 4.2.8	• Design according to UFC 4.2.8 • Remove overhead door, East. • Add (2) single exterior exit only doors on east wall. Separate exits. • Construct ramp at the northwest corner of the Assembly Hall, comply with ADA and IBC.

Amendment #1

Individual Space Requirements			
Room Num.	**Space Name**	**Space Require-ments**	**Individual Remarks**
			• Provide handrails and guardrails complying with ADA and Life Safety Standards. • Reconfigure existing handrail as necessary to allow access to upper portion of assembly hall • Provide ACT and grid system throughout space. • Install new carpet tile • Refer to PART 5, Article GENERAL CRITERIA
110	Academy Office	UFC 4.2.1	• Remove as needed and install new VCT flooring • Refer to PART 5, Article GENERAL CRITERIA
111	Storage		• Remove as needed and install new VCT flooring • Refer to PART 5, Article GENERAL CRITERIA
112	Men's Toilet	UFC 4.2.39	• Remove and install new ceramic tile flooring • Install new ceramic tile base • Installations shall comply with ADAAG & UFAS • Remove and install new plumbing fixtures, refer to mechanical • Remove and install new toilet and urinal partitions • Remove and install new paper towel dispenser & waste disposal • Install new electric hand dryer • Remove and install new mirrors & soap dispensers • Patch, repair and clean existing glazed CMU walls • Refer to PART 5, Article GENERAL CRITERIA
113	Stair/Connector between 115A & 115	UFC 4.2.47	• Construct elevator shaft and elevator machine room, East. • Install new elevator with entry off connector 113 • Install rubber stair tread covering • Remove as needed and install new VCT in corridor • Remove and install new handrails and guardrails complying with ADA and Life Safety Standards • Refer to PART 5, Article GENERAL CRITERIA
201	Office	UFC 4.2.1	• Remove VCT as needed • Install new carpet tile • Refer to PART 5, Article GENERAL CRITERIA
201A	Office	UFC 4.2.1	• Remove VCT as needed • Install carpet tile • Refer to PART 5, Article GENERAL CRITERIA
202	Office	UFC 4.2.1	• Remove VCT as needed • Install carpet tile • Refer to PART 5, Article GENERAL CRITERIA
203	Office	UFC 4.2.1	• Remove VCT as needed • Install carpet tile • Refer to PART 5, Article GENERAL CRITERIA

Amendment #1

Individual Space Requirements			
Room Num.	**Space Name**	**Space Require-ments**	**Individual Remarks**
203A	Office	UFC 4.2.1	• Remove VCT as needed • Install carpet tile • Refer to PART 5, Article GENERAL CRITERIA
204	Corridor	UFC 4.2.47	• Remove as needed and install new VCT flooring • Refer to PART 5, Article GENERAL CRITERIA
205	Administration Commons	UFC 4.2.3	• Remove existing non-structure office partition and install new full height (66”) modular in configuration similar to existing. • Develop workstation layout for 30 to 40 cubicles meeting UFC for remainder of area • Remove VCT as needed • Install new carpet tile • Refer to PART 5, Article GENERAL CRITERIA
206	Stair/Connector between 115A & 115	UFC 4.2.47	• Construct elevator shaft and elevator machine room, East. • Install new elevator with entry off connector 206 • Install rubber stair tread covering • Remove as needed and install new VCT in corridor • Remove and install new handrails and guardrails complying with ADA and Life Safety Standards • Refer to PART 5, Article GENERAL CRITERIA
	Building 115 TRAINING BUILDING		
114	Vestibule		• Remove as needed and install new VCT flooring • Refer to PART 5, Article GENERAL CRITERIA
115	Office	UFC 4.2.1	• Remove VCT as needed • Install new carpet tile • Refer to PART 5, Article GENERAL CRITERIA
116	Women’s Toilet	UFC 4.2.39	• Remove and install new ceramic tile flooring • Install new ceramic tile base • Installations shall comply with ADAAG & UFAS • Remove and install new plumbing fixtures, refer to mechanical • Remove and install new toilet partitions • Remove and install new paper towel dispenser & waste disposal • Install new electric hand dryer • Remove and install new mirrors & soap dispensers • Patch, repair and clean existing glazed CMU walls • Refer to PART 5, Article GENERAL CRITERIA
117	Women’s Toilet	UFC 4.2.39	• Remove and install new ceramic tile flooring • Install new ceramic tile base • Installations shall comply with ADAAG & UFAS

Amendment #1

Individual Space Requirements			
Room Num.	**Space Name**	**Space Require-ments**	**Individual Remarks**
			• Remove and install new plumbing fixtures, refer to mechanical • Remove and install new toilet partitions • Remove and install new paper towel dispenser & waste disposal • Install new electric hand dryer • Remove and install new mirrors & soap dispensers • Patch, repair and clean existing glazed CMU walls • Refer to PART 5, Article GENERAL CRITERIA
118	Mechanical Room	UFC 4.2.44	• Remove as needed and install new VCT flooring • Refer to PART 5, Article GENERAL CRITERIA
119	Corridor	UFC 4.2.47	• Remove as needed and install new VCT flooring • Refer to PART 5, Article GENERAL CRITERIA
120	Office	UFC 4.2.1	• Remove VCT flooring as needed • Install new carpet tile • Refer to PART 5, Article GENERAL CRITERIA
122	Storage		• Remove as needed and install new VCT flooring • Refer to PART 5, Article GENERAL CRITERIA
123	Lobby/Vestibule	UFC 4.2.7	• Install rubber stair tread covering • Clean and reseal glass block • Remove as needed and install new VCT flooring • Remove and install new handrails and guardrails complying with ADA and Life Safety Standards. • Refer to PART 5, Article GENERAL CRITERIA
124	Office	UFC 4.2.1	• Remove VCT flooring as needed • Install new carpet tile • Refer to PART 5, Article GENERAL CRITERIA
125	Office	UFC 4.2.1	• Remove VCT flooring as needed • Install new carpet tile • Refer to PART 5, Article GENERAL CRITERIA
126	Corridor	UFC 4.2.47	• Provide ramp complying with ADA and IBC • Remove as needed and install new VCT flooring • Remove and install new handrails complying with ADA and Life Safety Standards. • Refer to PART 5, Article GENERAL CRITERIA
127	Office	UFC 4.2.1	• Remove VCT flooring as needed • Install carpet tile • Refer to PART 5, Article GENERAL CRITERIA
128	Office	UFC 4.2.1	• Remove VCT flooring as needed • Install carpet tile • Refer to PART 5, Article GENERAL CRITERIA
207	Vestibule		• Remove as needed and install new VCT flooring • Refer to PART 5, Article GENERAL CRITERIA

Amendment #1

Individual Space Requirements			
Room Num.	**Space Name**	**Space Require-ments**	**Individual Remarks**
208	Office	UFC 4.2.1	• Remove VCT flooring as needed • Install carpet tile • Refer to PART 5, Article GENERAL CRITERIA
209	Women's Toilet	UFC 4.2.39	• Remove and install new ceramic tile flooring • Install new ceramic tile base • Installations shall comply with ADAAG & UFAS • Remove and install new all plumbing fixtures, refer to mechanical • Remove and install new toilet partitions • Remove and install new paper towel dispenser & waste disposal • Install new electric hand dryer • Remove and install new mirrors & soap dispensers • Patch, repair and clean existing glazed CMU walls • Refer to PART 5, Article GENERAL CRITERIA
210	Men's Toilet	UFC 4.2.39	• Remove and install new ceramic tile flooring • Install new ceramic tile base • Installations shall comply with ADAAG & UFAS • Remove and install new all plumbing fixtures, refer to mechanical • Remove and install new toilet & urinal partitions • Remove and install new paper towel dispenser & waste disposal • Install new electric hand dryer • Remove and install new mirrors & soap dispensers • Patch, repair and clean existing glazed CMU walls • Refer to PART 5, Article GENERAL CRITERIA
211	Office	UFC 4.2.1	• Remove VCT flooring as needed • Install new carpet tile • Refer to PART 5, Article GENERAL CRITERIA
212	Corridor	UFC 4.2.47	• Remove as needed and install new VCT flooring • Refer to PART 5, Article GENERAL CRITERIA
213	Office	UFC 4.2.1	• Remove VCT flooring as needed • Install new carpet tile • Refer to PART 5, Article GENERAL CRITERIA
214	Office	UFC 4.2.1	• Remove VCT flooring as needed • Install new carpet tile • Refer to PART 5, Article GENERAL CRITERIA
215	Storage		• Remove as needed and install new VCT flooring • Refer to PART 5, Article GENERAL CRITERIA
216	Stairs	UFC 4.2.47	• Install rubber stair tread covering • Remove as needed and install new VCT flooring • Remove and install new handrails and guardrails

Amendment #1

Individual Space Requirements			
Room Num.	**Space Name**	**Space Require-ments**	**Individual Remarks**
			complying with ADA and Life Safety Standards. • Refer to PART 5, Article GENERAL CRITERIA
217	Office	UFC 4.2.1	• Remove VCT flooring as needed • Install new carpet tile • Refer to PART 5, Article GENERAL CRITERIA
218	Office	UFC 4.2.1	• Remove VCT flooring as needed • Install new carpet tile • Refer to PART 5, Article GENERAL CRITERIA
219	Corridor	UFC 4.2.47	• Remove as needed and install new VCT flooring • Refer to PART 5, Article GENERAL CRITERIA
220	Office	UFC 4.2.1	• Remove VCT flooring as needed • Install carpet tile • Refer to PART 5, Article GENERAL CRITERIA
221	Office	UFC 4.2.1	• Remove VCT flooring as needed • Install carpet tile • Refer to PART 5, Article GENERAL CRITERIA
	Family Support Office	UFC 4.2.5	• Contractor shall coordinate exact location with client
	Break room	UFC 4.2.43	• Contractor shall coordinate exact location with client
	Building 198 OMS BUILDING		
	Maintenance Bay Storage (Unit Tool Storage)	UFC 4.2.20	• To be divided into 3 equal spaces for unit tool storage, construct partition walls • Remove overhead door, West • Remove single exterior door, located on the South side • Add doors for access into tool storage from Maintenance Bay • Clean concrete floor • Refer to PART 5, Article GENERAL CRITERIA
	Maintenance Bay (3) Offices	UFC 4.3.9 UFC 4.2.1	• Space for (3) offic es and (1) tool storage shall be carved out of the west end while retaining access to the corridor accessing the existing offices. • Remove overhead door, East • Add single exterior door, West, suggest directly across from corridor 126 • Clean and reseal glass block • Clean concrete floor • Refer to PART 5, Article GENERAL CRITERIA o Construct partition walls o Install VCT flooring o Install new doors, frames and hardware o Refer to Part 5, Article GENERAL CRITERIA

Amendment #1

Individual Space Requirements			
Room Num.	**Space Name**	**Space Require-ments**	**Individual Remarks**
	Tool Storage	UFC 4.2.20	o Define space by use of caging o Clean concrete floor o Refer to PART 5, Article GENERAL CRITERIA
	Corridor	UFC 4.2.47	• Patch, repair and paint drywall walls • Install new VCT flooring • Refer to PART 5, Article GENERAL CRITERIA
	Office	UFC 4.2.1	• Patch, repair and paint drywall walls • Install new VCT flooring • Refer to PART 5, Article GENERAL CRITERIA
	Office	UFC 4.2.1	• Patch, repair and paint drywall walls • Install new VCT flooring • Refer to PART 5, Article GENERAL CRITERIA
	Women's Toilet	UFC 4.2.39	• Remove and install new ceramic tile flooring • Install new ceramic tile base • Installations shall comply with ADAAG & UFAS • Remove and install new plumbing fixtures, refer to mechanical • Remove and install new paper towel dispenser & waste disposal • Install new electric hand dryer • Remove and install new mirrors & soap dispensers • Remove and install new wall tile • Refer to PART 5, Article GENERAL CRITERIA
	Locker Room	UFC 4.2.41	• Remove existing lockers and install new lockers • Install new VCT flooring • Refer to PART 5, Article GENERAL CRITERIA
	Men's Toilet	UFC 4.2.39	• Remove and install new ceramic tile flooring • Install new ceramic tile base • Installations shall comply with ADAAG & UFAS • Remove and install new plumbing fixtures, refer to mechanical • Remove and install new toilet & urinal partitions • Remove and install new paper towel dispenser & waste disposal • Install new electric hand dryer • Remove and install new mirrors & soap dispensers • Remove and install new wall tile • Refer to PART 5, Article GENERAL CRITERIA
	Mechanical Room	UFC 4.2.44	• Clean concrete floor • Refer to PART 5, Article GENERAL CRITERIA
	BUILDING 204, UNIT STORAGE		
	Unit Storage	UFC 4.2.20	• Space for (3) 120 sq ft offices shall be located on the

Amendment #1

Individual Space Requirements			
Room Num.	**Space Name**	**Space Require-ments**	**Individual Remarks**
	(3) Offices	UFC 4.2.1	South side. Provide new entry doors into the 3 new rooms. • Remove overhead door, West • Remove existing caging • Provide layout for new caging according to UFC • Clean concrete floor • Refer to PART 5, Article GENERAL CRITERIA o Construct permanent partition walls o Clean concrete floor o Refer to PART 5, Article GENERAL CRITERIA
	Small Unit Storage	UFC 4.2.20	• Remove existing caging • Provide layout for new caging according to UFC • Clean concrete floor • Refer to PART 5, Article GENERAL CRITERIA
	Arms Vault	UFC 4.2.11	• Provide dehumidifiers and drains • Clean concrete floor • Refer to PART 5, Article GENERAL CRITERIA
	Armory		• Clean concrete floor • Refer to PART 5, Article GENERAL CRITERIA
	Mechanical Room	UFC 4.2.44	• Clean concrete floor • Refer to PART 5, Article GENERAL CRITERIA
	Vault		• Clean concrete floor • Refer to PART 5, Article GENERAL CRITERIA
	Rifle Range (Storage)		• Rifle range to be fit up for storage, possibility of retaining a Weapons Simulator in future • Clean concrete floor • Refer to PART 5, Article GENERAL CRITERIA
	Office	UFC 4.2.1	• Clean concrete floor • Refer to PART 5, Article GENERAL CRITERIA
	Women's Toilet (presently shower)	UFC 4.2.39	• Convert shower room into women's toilet • Installations shall comply with ADAAG & UFAS • Install 2 toilets and 2 sinks – utilize existing chase wall • Remove and install new ceramic tile flooring • Install ceramic tile base • Install toilet partitions & rec. toilet paper dispensers • Install paper towel dispenser/waste disposal • Install new electric hand dryer • Install mirrors & soap dispensers • Remove and install new wall tile • Refer to PART 5, Article GENERAL CRITERIA
	Men's Toilet	UFC 4.2.39	• Remove and install new ceramic tile flooring • Installations shall comply with ADAAG & UFAS

Amendment #1

Individual Space Requirements			
Room Num.	**Space Name**	**Space Require-ments**	**Individual Remarks**
			• Remove and install new plumbing fixtures, refer to mechanical • Remove and install new ceramic tile flooring • Install ceramic tile base • Remove and install new toilet & urinal partitions • Remove and install new paper towel dispenser & waste disposal • Install new electric hand dryer • Remove and install new mirrors & soap dispensers • Remove and install new wall tile • Refer to PART 5, Article GENERAL CRITERIA
	Mechanical Room	UFC 4.2.44	• Clean concrete floor • Refer to PART 5, Article GENERAL CRITERIA

B. Exterior Signage
1. Training Building - provide 15” cast aluminum letters that comply with current standard cast lettering format spelling “U.S. ARMY RESERVE CENTER” to be located above the front entry doors. Also place existing cast aluminum GF/CI Minuteman plaque on the front of the facility at a height where it can be seen from North Road.
2. Facility – provide standard sign according to Full Facility Restoration Program. Sign shall have a base to match the training facility.

C. Building Interior Design
1. Interior Colors
   a. To be determined by the D/B Contractor and approved by the Government.
   b. The D/B Contractor shall provide and submit a Comprehensive Interior Design (C.I.D.) and Structural Interior Design (S.I.D.) package addressing their proposed material colors, finishes, etc. as per the MDS Submittal Requirements.
2. Interior Doors
   a. Refer to UFC 4-171-05, Section 3.5.5 for guidance regarding interior doors.
3. Door Hardware and Locksets
   a. Refer to Part 5, Article GENERAL CRITERIA for guidance.
4. Room Numbering
   a. Provide new interior signage and follow the interior design guidelines addressed in UFC 4-171-05, paragraphs 2.11, and 3.5.3.
5. Interior Signage
   a. Building directory (lighted with floor plan graphic in the top panel), GF/CI Army Reserve Minuteman plaque, room signage and directional signage are minimum requirements.
6. Floor Finishes

a. The individual space requirements in Table above provide floor finish guidance. Floor finishes shall follow or closely match approved MDS Army Reserve Center finishes.

b. All flooring shall be finished with wall base. Ceramic tile cove base shall be used with ceramic tile floor. Porcelain tile cove base shall be used with porcelain tile floor. 4" rubber cove base shall be used with all other "hard surface" floors such as VCT and concrete. 4" straight rubber base shall be used with carpet floors.

7. Window Blinds

a. Provide new horizontal 1" aluminum window blinds at all exterior windows. Review need for blinds in the lobby and at door sidelights with user. Color to be determined by the D/B Contractor and approved by the Government.

8. Corner Guards

a. Provide wall and corner guards in high-traffic areas to match wall color. Review areas with user to define "high-traffic". In the Unit Storage areas provide steel angle corner guards at wall corners and bollards on each side of the overhead doorjambs.

9. Exterior Lock/Knox Box

a. An exterior key lock box for fire department access shall be provided in an approved height and location adjacent to Vestibule 1. The lock box shall meet the Fire Department specifications.

5.3 STRUCTURAL

1. General Design Criteria

a. All new structural additions and new roof systems shall comply with the design criteria specified herein.

b. New additions shall be coordinated with the architectural requirements as discussed herein.

c. The D/B contractor shall provide a narrative on the structural portions of the renovation efforts. The narrative shall include, but not be limited to, descriptions of the work to be performed, citations of the criteria used, and how changed conditions compare to the acceptance criteria.

d. The D/B contractor shall select and design the new roof systems. Existing structural systems shall be analyzed by the D/B contractor to assure that new roof systems will not overstress the existing structure as determined in accordance with the applicable design codes.

e. Foundation systems for new additions shall be designed in accordance with the recommendations of the geotechnical report as prepared in accordance with the requirements of this RFP.

f. Where information of UFC 3-310-01 does not agree with the IBC, the information in the IBC shall govern unless specifically directed otherwise by the Contracting Officer.

g. Seismic design shall be per IBC 2000, using the USGS 2002 maps, as modified by the requirements of UFC 1-200-01. Design loads and load combinations, except seismic, shall be in accordance with ASCE 7-98.

h. Information required by IBC 2000 Section 1603 shall be included on the drawings.

2. Structural Assessment Report

Amendment #1

a. A structural assessment of buildings 115, 115A, 198, and 204 is provided as an attachment to this RFP. The D/B contractor shall refer to the recommendations in this assessment as a guide in order to bring the performance level of buildings 115, 115A, 198, and 204 up to the Life-Safety performance level in accordance with FEMA 310 and FEMA 356 as mandated in ICSSC RP6.

5.4 MECHANICAL

A. Existing Conditions

1. Refrigerant equipment:
   a. Water-cooled chiller and cooling tower system for Admin #115 appears to be rusty and not working. It shares the same supply pumps with the hot water boiler inside mechanical room, and is believed to be originally designed and constructed to use 2-pipe hydronic system.
   b. The individual offices in Admin #115, OMS #198 and various other spaces have window type units for cooling.
   c. Admin #115A annex is served by 5 Mammoth packaged rooftop units. The model # for 4 big units is: CEHBR-162-L400-1023; the smaller one is # HBR-L400-1025. The smaller unit is thought to be heating-only. At least one of the units has lost its cooling capability.
   d. There is no overall cooling system in Unit Storage #204 and OMS #198.
2. Heating equipment:
   a. Weil Mclain gas fired boilers are located one each in the mechanical rooms of building #115, #198 and #204. All are Weil McLain 78 series with Powerflame Gas burner units, rated for steam or hot water use. The one in Admin #115 is hot water type model 678 with net I-B-R rating of 559 MBH hot water, and the other two are low-pressure steam, model 978 with net I-B-R rating of 755 MBH steam (876 MBH rating when hot water). These boilers are believed to be about same size and installed in 1997. All boilers appear to be in relatively good working condition.
   b. The heating for building #115A comes from 5 gas-fired packaged rooftop units.
   c. OMS #198 work bay is served by overhead steam unit heaters. Restrooms, showers and other miscellaneous spaces are served by steam convectors.
   d. Unit storage #204 is served by overhead heating and ventilating units and steam unit heaters. The arms vaults have steam fin-tube. Arms vaults have residential style portable humidifiers; one or more also is equipped with a non-functioning and abandoned regeneration-type industrial humidifier. The existing firing range systems are unknown.
3. Other HVAC Components
   a. Most of the ductwork is in #115A training building, and associated with the rooftop units serving that building. The floor-to-floor height in this building is limited. The majority of ducts are running between joists.
   b. The buildings do not have a full kitchen. Light cooking equipment is currently located in building #115A assembly area. There is no approved kitchen hood, only a wall mounted exhaust fan.
   c. There is insufficient combustion air in all three boiler rooms. Only lower louvers are observed. Furthermore there are no summer ventilations in those rooms.

Amendment #1

d. The fresh air in admin #115 is mostly drawn from window units. Ventilation in all buildings except possibly 115A appears inadequate to satisfy ASHRAE 62 requirement. There is no ventilation system or general exhaust in OMS #198.

e. There is an overhead vehicle exhaust system running along the sidewalls in OMS #198. The fan status is unknown, but the ductwork appears to be in good shape.

4. Plumbing

a. The main water line runs parallel to the building front, then branches off to building #115, #198 and #204 separately. None have backflow prevention devices installed.

b. Restrooms and showers are in scattered locations in the various buildings. Condition is poor. Existing fixtures typically are not low water consumption type.

c. Gas service at 3", 30 psig enters the facility, then it is reduced to 2.5 psig @ meter to serve different buildings. The gas pressure is further reduced to 7" – 13" wc low pressure at boilers, packaged rooftop units and other gas fired equipment.

d. Small residential type water heaters are scattered around the facility, typically l electrical type, with about 4.5 kw, 40 to 75 gal capacity. There are no recirculation systems and pumps installed in any of hot water heaters.

e. There are no backflow preventers installed in mechanical equipment makeup water lines.

f. There is no shop air system in OMS #198.

5. Fire protection

a. Buildings are not presently sprinklered.

b. An exception is a small wet pipe system serving just the Loading/receiving area of Unit Storage building #204.

c. The boiler rooms in building #198 and #204 have wood trusses, and the walls separating the corridors do not extend all the way up to the deck.

B. General System Design Criteria.

1. Provide selective mechanic al demolition to accommodate installation of new and remodeled systems including, but not limited to, disconnection and removal of portions of the HVAC, plumbing, piping and temperature control systems.

2. Design and install (labor, material, permits, licenses, etc.) the automatic fire suppression system, plumbing system, heating, ventilating and air conditioning (HVAC) systems, and HVAC controls.

3. Refer to paragraph: APPLICABLE CODES AND CRITERIA in this Section 01010 for a general listing of applicable codes.

a. Systems shall be designed and installed in accordance with the requirements of all applicable codes. Follow as a first guide the requirements of UFC 1-200-01 Design: General Building Requirements.

b. UFC 1-200-01 references IBC 2000 and other government and non-government standards and criteria. The document provides guidance and modifications to IBC 2000 and is structured around its format.

c. Note that the administrative portions of the IBC are not applicable to the military construction process. Technical portions of the code include mechanical systems are applicable as modified in the UFC.

d. In addition to the specific requirements laid out in UFC 1-200-01, use as an additional reference the general guidelines of the International Mechanical

Code and the International Plumbing Code, current editions. These are a valuable source of information and guidance, and as such are cited within UFC guide specifications.

e. Follow additionally all associated State and Local codes.

f. All Electrical work performed by the Mechanical Contractor shall comply with the National Electrical Code (NFPA 70) for workmanship and installation requirements.

4. Identification:
   a. Piping will be identified per ANSI requirements.
   b. Equipment is to be identified with engraved and laminated plastic nameplates or black lamacoid sheets with white lettering.
   c. Terminal units are to be labeled at their underside to allow identification after installation.
5. Equipment and materials shall be as specified. Used equipment or materials are not acceptable. Installation shall meet the requirements specified. Contractor shall comply with seismic requirements and shall meet latest edition of UFC 4-010-01, DoD Minimum Antiterrorism Standards for Buildings requirements. All materials and equipment shall be the manufacturer's latest design. Equipment layout shall make provisions for recommended clearance and code requirements in accordance with UFC 4-010-01. Coordinate with the architectural requirements for plumbing fixtures (water closets, urinals, lavatories, mop sinks, electric water coolers, etc.)
6. Provide a design narrative, which explains in summary form, all of the plumbing, including backup calculations. Fixture quantities will be included within the plumbing calculation. Indicate the building population (number of males and females), fixture determination; fixture units for drainage, venting, cold and hot water piping; roof areas used in determining storm drainage pipe sizes; and the capacities of all equipment and tanks. Calculations: Show sizing calculations clearly. Indicate the source of tables used for calculation. Calculations shall be checked for accuracy and initialed or signed by the design professional.
7. Systems requiring seasonal drainage shall not be used except for lawn irrigation.
8. Access panels/doors shall be provided as required for valves and appurtenances of the plumbing system. Coordinate with the Architectural discipline to ensure that provisions for access panels/doors are provided.
9. The buildings shall have restrooms and other plumbing fixtures. The restrooms shall have all fixtures as outlined in the reference criteria. Freezeproof wall hydrants shall be located on the building exterior.
10. HVAC control schemes and sequences shall meet the requirements of latest edition, ASHRAE Standard 90.1 Energy Standard for Buildings – Except Low-Rise Residential Buildings.
11. The Contractor is responsible for obtaining any available rebates from the Utility and crediting those rebates to the Government in the bid.

C. Plumbing
1. Domestic Water Supply.
   a. Refer to Part 4 Civil Site Design, paragraph 4.10 of this Section 01010.
   b. Provide all required backflow prevention, valving and accessories.
2. Plumbing Systems.
   a. New high quality vitreous china, stainless steel, and porcelain enameled plumbing fixtures with chromium-plated fittings as applicable will be provided in each building.

Amendment #1

b. Provide new complete compressed air system for the OMS Building, with air drops provided in each bay.

c. Plumbing Piping. Replace existing building hot and cold water piping system throughout.

1) New copper piping will be provided for the entire domestic water system. Isolation shutoff valves will be provided. Plumbing piping shall be sized to accommodate flush valve plumbing fixtures.

2) Extend to fixtures, outlets, and equipment. The domestic hot water and cold water piping shall be arranged and installed to permit draining. The supply line to each item of equipment or fixture, except faucets, flush valves, or other control valves, which are supplied with integral stops, shall be equipped with an accessible shutoff valve to enable isolation of the item for repair and maintenance without interfering with operation of other equipment or fixtures. Supply piping to fixtures, faucets, hydrants, shower heads, and flushing devices shall be anchored to prevent movement.

3) Provide line sized isolation valve at each branch connection. Locate valve as close as possible to branch takeoff. Where branch line serves single piece of equipment or fixture, provide isolation valve at each branch connection and at each fixture.

4) Water hammer arrestors shall be used to minimize water system noise in accordance with the Plumbing Code. Velocities in Domestic Water piping shall be a maximum of 4 feet/second.

3. Drain Waste and Vent

a. Piping systems for water and sewer outside of the 5’-0” line of the building are to be as specified under the civil portion of the design criteria. Runs are to be kept as short as possible. Metallic vent piping shall be used through the roof from at least 6 inches below the roof to the required point of termination above the roof. All vents shall terminate within 12” of roof peak. Vents shall be designed to support snow load.

b. Existing DWV piping: Existing DWV Piping that is currently routed in a path consistent and usable with D-B contractors revised system may be reused provided it meets all tests and conditions below:

1) Is routed in a path that is consistent, logical, and usable with D-B contractors revised overall plumbing system layout.

2) Shall be fitted with cleanouts and accessories same as would be called for if installed new.

3) Shall meet current Code, same as if a new installation.

4) Shall be cast iron or copper, and in good visual condition.

5) Shall be rodded 100% using a mandrel sized for snug fit inside clean new pipe of the same type as existing.

6) Shall be pressure tested.

7) For piping 4" and over, shall be TV inspected wherever possible, with VHS videotapes made available to COTR for inspection.

8) Pipe shall be replaced if determined by Government to be sloped wrong/misaligned so as to trap water, or having significant wall erosion, cracks, deteriorated joints, or other damage to render it less than fully operable and functionally equivalent to "near-new" pipe.

c. All lavatory and sink drains and P-traps shall be coordinated with architectural millwork to isolate drains. The building Sanitary Sewer shall be designed in

accordance with Army criteria and the current International Plumbing Code. Coordinate location of floor sinks and floor drains with the structural discipline for floor sloping requirements. Provision shall be made to collect condensate from the condensate drains and drain to the sanitary sewer system.

d. Add trench drains in each bay of OMS. The design may be a trench drain along the inside face of the overhead doors, to receive drainage from inside the shop only, no rainwater. Connect to an oil-water separator, which also serves outside covered wash bay. Provide floor drains in mechanical rooms near each boiler, air-handling unit, pumps, and water heater.

4. Domestic Water Heating Systems.

a. Domestic Water Heating. Provide high efficiency storage type water heaters. The sizes will be based on ASHRAE guidelines for the specific building occupancy and usage. Water heaters will comply with the energy conservation requirements of ASHRAE Standard 90.1 – Energy Standard for Buildings Except Low-Rise Residential Buildings.

b. Domestic hot water system shall be sized as required to provide adequate hot water for the lavatories, sinks, showers, etc.

c. Training Building domestic water heating is to be new natural gas-fired, with an operating temperature of 140ºF for the kitchen. The building water supply temperature shall be 120ºF. The size of the hot water heaters shall be in accordance with the 2003 ASHRAE Applications Handbook. One hot water heater shall service the entire building, and one hot water heater shall serve the kitchen, and shall be located in the Mechanical Room. Water heaters shall be provided with fully automatic controls with safety shutoff relief valves and intermittent spark ignition. The water heater shall meet ASHRAE 90A Standards and have a minimum thermal efficiency of 80 percent.

d. Domestic water heaters for the OMS and Unit Storage Buildings shall be new, and may be electric or gas.

e. The domestic water systems shall be served by a recirculation system to provide hot water at remote fixtures continuously. Provide blending valves as required for scald protection at each fixture or group of fixtures.

f. Consider in the design using point-of-use water heaters or other means to economically provide hot water. Consider in the design that for much of the time, except drill weekends, hot water use is small.

5. Room Specific Plumbing Requirements.

a. Kitchen

1) BASE: No kitchen work.

2) OPTION: Kitchen shall be completely upgraded to meet current size requirement and UFC 4-171-05 Design: Guide for Army Reserve Facilities, dated 1 Nov 2003. Plumbing work will include new plumbing piping throughout, connections to new kitchen equipment, sinks, hand wash sink, floor drains, open receptacles, new water heater and water heater booster system. Provide 180-degree water to the dishwasher, and to a sanitizing compartment of new scullery sinks. Refer to Section 01011 for additional requirements.

3) OPTION: Construct Mobile Kitchen Equipment Pad (MKT) complete with Non-Freeze hot and cold water, sanitary drain with trap cover, and electrical connections. Refer to Section 01011 for additional requirements.

Amendment #1

b. All toilet rooms: Use criteria document UFC 4-171-05 Design: Guide for Army Reserve Facilities, dated 1 Nov 2003 as basis for designing the toilet rooms. Training building restrooms shall be revamped to be ADA & UFAS accessible. New fixtures, trim, and piping shall be provided throughout. Provide privacy screens at urinals, individual (not gang) showers, tile (not fiberglass) showers, and countertop lavatories with countertop configured to meet accessibility requirements. Provide supply and waste piping with preformed trap-wrap type insulation kits. Provide battery powered sensor-type flush valves for urinals and water closets. Showers to have new pressure balanced shower valves and water-saving showerheads.

c. Water coolers. Provide on each floor of the Training Center new hi-low (accessible) water coolers. Mount in recesses or provide side shields to meet ADA requirements. Coolers to have non-HCFC refrigerants.

d. Provide elevator sump and drainage per NFPA 101 or ANSI A 17.1.

e. OMS Building: Provide hose bibs in each maintenance bay. Provide non-freeze exterior hose bibbs to serve the vehicle wash pad area

f. Add all required backflow prevention, valving and accessories to the existing water service entering the OMS and the Training Building. Provide a reduced pressure zone type unit meeting ASSE 1013. Consider installation of a unit rated for vertical upflow mounting, as this may reduce space requirements.

g. Within the OMS Building, replace the existing water heater. Locate in mechanical room. Provide new lavatory, faucet, trim and supply. Provide new toilet, and urinal. Provide new safety shower and eyewash. Provide new hi-low cooler. Provide interior hot and cold-water hose bibb with floor set janitor's receptor in the area of the toilet room.

h. Emergency Eyewashes and Showers.

1) Replace in OMS Building the OMS Building emergency eyewash unit with a combination emergency eyewash and shower station.

D. Natural Gas System.

1. Design, furnish, and install natural gas piping from the utility connection (gas meter) to mechanical gas fired equipment as required and as specified. Provide complete design and layout of piping system coordinated with new utilities.

E. Compressed Air System.

1. Compressed Air. Provide duplex air compressor with storage tank for the OMS Building. Provide air piping distributed throughout the vehicle maintenance bays and airdrops on either side of each vehicle entrance door with shutoff valve shall remain. Each maintenance bay shall be provided with two airdrops.

F. Fire Suppression Systems

1. Design Criteria.

a. Fire suppression shall meet the criteria noted under paragraph APPLICABLE CODES AND CRITERIA in this Section 01010 and the technical specifications. Principal guide documents are:

1) UFC 3-600-1 – Fire Protection Engineering for Facilities.

2) NFPA 13 – Installation of Sprinkler Systems.

b. For issues regarding Fire Department service, investigate and meet the requirements of the local Fire Marshal– hydrant standards, fire hose threads, protocol for fire access, Post Indicator valves, Fire Department Connections, and all other requirements.

Amendment #1

2. Fire Suppression System Design.
   a. Provide complete fire protection sprinkler system for the building.
      1) Provide new dedicated fire protection water service, backflow prevention, valves and accessories as required.
      2) Provide a fire pump, pressure maintenance pump and accessories if required for proper fire protection system design.
      3) Wet-pipe fire protection piping shall not be located within unheated areas.
3. Water source:
   a. Refer to PART: SITE/CIVIL DESIGN AND CONSTRUCTION, Article: REQUIREMENTS FIELD VERIFICATION OF EXISTING CONDITIONS, for description of the existing municipal water source and on-site facilities.
   b. Flow test data in the Appendix E of this Section 01010.
4. Buildings sprinkler requirements:
   a. All of buildings 115 & 115A (Training Building), 198 (OMS), 204 (Heated Storage), and connectors: Fully Sprinklered.
   b. If design includes a pitched roof, then attic spaces with combustible material are to be fully sprinklered. The existing flat roof structure of the OMS and the Unit Storage Building are wood.
   c. Sprinklers in ventilated attics shall be dry pipe type. In general, Owner preference would be to use wet systems for all the heated areas. However, the designer where allowed by above cited criteria to do so, shall evaluate whether a wet system in the heated space and a dry system in the attic, or a single dry system throughout the particular building offers best advantage.
5. Hazard classification requirements for this facility with regard to sprinkler protection:
   a. Kitchen and storage areas to be ordinary hazard Group 1.
   b. Ordinary Hazard Group 2 Classified Areas: Repair bays, scheduled maintenance bays, circulation bays, oil dispensing rooms, mechanical rooms.
   c. Light Hazard Group Classified Areas: All areas not classified as ordinary hazard Group 2 areas including combustible attic space.
6. Design approach
   a. The Training Building shall be sprinkler protected in accordance with the criteria listed in paragraph APPLICABLE CODES AND CRITERIA of this Section 01010. The systems shall be designed hydraulically. Sufficient hydraulic calculation sets that will fully define the entire system sizing shall be provided.
   b. The D/B Contractor shall solicit, independent of the project, a fire protection design firm to provide a layout of the entire fire protection system including hydraulic calculations. The drawings and calculations shall be performed, checked and reviewed by a National Institute for Certification in Engineering Technologies (NICET) Level III certified fire protection specialist. The D/B Contractor shall be responsible for the installation, testing and field certifying of the entire system.
   c. The D/B Contractor shall provide performance specifications, fire main routing, and zone delineation as a minimum to the fire protection design firm for use in design of the fire protection system.
   d. Fire protection equipment and piping shall be coordinated with all disciplines.
   e. Recessed or concealed heads will be used in areas with ceilings. Upright or pendant heads will be used in exposed areas with no ceilings.

Amendment #1

G. Heating, Ventilating, and Air Conditioning

1. Design Criteria.
   a. Refer to paragraph: APPLICABLE CODES AND CRITERIA in this Section 01010.
2. Energy Use Budget (EUB).
   a. Follow the requirements of UFC 3-400-01 Design Energy Conservation to Establish Mechanical System and annual Energy use Budgets. The proposed design shall not exceed the area or the total building Energy Use Budget (EUB). These figures exclude energy used for process purposes. The D/B Contractor is encouraged to submit designs that will minimize energy consumption during the heating and cooling seasons.
   b. The EUB calculation for the building shall include space cooling, space heating, domestic water heating, and ventilation and lighting loads, excluding process loads, in accordance with the planned Facility's operational hours. The area used in the EUB estimation is the gross floor area of the building. For the purpose of energy design of this facility each of the existing buildings tied together with connectors may be considered a separate building. Makeup ventilation for vehicle exhaust systems shall be considered process load.
3. Design Conditions, Heating/Cooling Load Calculations.
   a. Outside Design Conditions. Obtain outside design conditions for cooling and heating from the UFC 3-400-02 28 February 2003 "Engineering Weather Data" and in accordance with UFC 4-171-05 Design: Guide for Army Reserve Facilities, dated 1 Nov 2003. Weather for Newark, NJ taken from UFC 3-400-02 is included in the Appendix to this Section 01010.
   b. The cooling load shall be calculated based on the 1% outdoor air conditions in the referenced data. The heating loads shall be calculated based on the 99% outdoor air condition. Cooling load shall be calculated using the 0.4% dewpoint condition in the ASHRAE Fundamentals, or its equivalent in UFC 3-400-02 for the locale.
   c. Load Calculations. Heat gain and loss calculations shall be, at a minimum, in accordance with the current edition of the American Society of Heating, Refrigerating, and Air Conditioning Engineers (ASHRAE) Handbook of Fundamentals and the latest edition of the ASHRAE Cooling and Heating Load Calculation Manual. The load calculations shall be in accordance with ASHRAE nonresidential Cooling and Heating Load Calculations. Calculations shall be performed on a room-by-room basis. Heating load calculations shall not consider lights or internal loads as supplementing the heating system. Provide a Design Narrative to clearly describe the features of the systems being used. Demonstrate compliance with ASHRAE 90.1 by completing the proper compliance forms available from ASHRAE. Summarize the outdoor and indoor design conditions used. State the design objectives and design assumptions. Outline design decisions made that affect the operation and maintenance of the systems. Provide all calculations used to size all equipment. Calculations shall be checked for accuracy and initialed or signed by the design professional. The method of zoning the building spaces used for computerized building load calculation input shall be clearly shown as part of the calculations.
   d. Cooling - Design Conditions: 75 degrees F at 50% relative humidity. This does not apply to storage rooms, lockers, toilets, showers, and arms vault rooms, which do not receive direct comfort cooling.

Amendment #1

e. Heating - Design Conditions: 68 degrees F occupied, 55 degrees F un-occupied. This does not apply to storage rooms, mechanical, electrical, and telephone rooms, which are heated to 55 degrees F, or per specific housed equipment requirements in these spaces if more stringent. Maintenance bays shall be heated to 69 degrees F.

f. Occupancy Loads. The sensible and latent loads for the occupied spaces will be in accordance with the ASHRAE Handbook – Fundamentals. The number of people is determined by using UFC 4-171-05 and ASHRAE recommendations. The D/B Contractor shall meet with the user to verify expected space-by-space occupancies for loads calculations prepares, and also overall building peak occupancies.

g. Lighting Load. Fixture count and heat release data will be used to calculate the lighting loads in each space.

h. Equipment Loads. A 1.5 watt per square foot allowance will be included for open office and classroom spaces. A 350 watt allowance will be included for each workstation in private and semi private offices.

i. Toilets and showers will be exhausted at a minimum of 10 air changes per hour. Mechanical rooms will be provided with a minimum of 2 air changes per hour or as required to remove excessive heat. Provide supply fans rather than exhaust fans where mechanical spaces house atmospheric burners. Unit storage is ventilated at 1 air change per hour. The arms vault and other specific areas are designed in accordance with UFC 4-171-05. Exhaust ventilation is provided within vehicle maintenance bays at a rate of 1.5 CFM/sq. ft. Kitchen hood exhaust as addressed in subparagraph "Kitchen Hoods" below of paragraph "HVAC Buildings – Training Building" in this Section 01010.

4. Hydronic Piping, Locations.
   a. Hydronic piping shall be all new.
   b. Hydronic piping shall be designed to be efficient, easily hydraulically balanced, and accessible. Riser piping located in interior partition or exterior walls is prohibited.
5. Water Quality and Treatment.
   a. Provide manual shot feeder water treatment systems for the closed-hydronic piping systems. Pipe across pumps. Provide isolation valves, and a visual flow indicator in the feeder discharge piping.
   b. Cooling tower -- N/A. Existing cooling tower shall be removed. Replacement chilled water system shall be air-cooled.
6. Equipment.
   a. All materials and equipment shall be the standard cataloged product of manufacturers regularly engaged in production of such materials and equipment, and shall be the manufacturer's latest standard design.
   b. Mechanical systems electrical characteristics shall be matched to building's electrical system voltage.
7. Access Panels.
   a. Access panels/doors shall be provided as required for valves and appurtenances of the HVAC system. Coordinate location with the Architectural discipline to ensure provisions for access panels/doors.
8. Duct System Design.
   a. The ductwork shall be sized using the static regain design method. Duct locations shall be coordinated with all disciplines.

Amendment #1

b. Flexible duct shall be insulated metallic and shall be limited to 5'-0" spans.

9. Intake and Exhaust Locations
   a. Exhaust vents shall not be located near outdoor air intakes to prevent short-circuiting of exhaust air, nor shall they be located less than 10 feet above grade.
10. Provide mechanical exhaust in all Toilet Rooms, Shower Rooms and Janitor's Rooms. Exhaust fans will relieve air from these spaces maintaining a slight negative pressure for odor control.
11. Fire and Smoke Dampers
   a. Provide fire dampers in locations where ducts penetrate fire rated wall ceiling or floor assemblies. Provide combination fire/smoke dampers when penetrating wall floor or ceiling assemblies that are smoke barriers or are required to have smoke dampers.
   b. Fire and smoke dampers shall be rated according to the wall, ceiling or floor assembly being protected. Fire dampers shall conform to the requirements of NFPA 90A, UL 555, and IBC. Smoke dampers shall conform to the requirements of NFPA 90A, UL 555S and IBC. Fire and smoke dampers shall be installed in accordance with NFPA 90A.
12. Diffusers, Grilles and Registers.
   a. Air distribution devices shall be all new, factory-fabricated of steel, corrosion-resistant steel, or aluminum and shall distribute the specified quantity of air evenly over space intended without causing noticeable drafts.
13. Automatic Temperature Controls.
   a. All existing pneumatic temperature control systems and components within the buildings shall be removed.
   b. New systems shall be DDC. Control components shall be electric, electronic, or DDC, as described -- not pneumatic.
   c. Remove existing valves, including any self-powered regulators used at some connectors and wall-fin. Provide all new controls. Provide a new control valve with wall mounted temperature sensor for each heating system control zone.
   d. Provide training for the temperature control system.
   e. OPTION: The contractor is to provide an energy management system as an Option to this RFP. Refer to section 01011 for additional requirements.
14. Testing, Adjusting, and Balancing.
   a. Testing, adjusting, and balancing shall be provided for HVAC and hydronic heating systems. Provide testing, adjusting and balancing services for all air distribution systems, hydronic distribution systems and associated equipment. The work shall include setting of speed and volume control for systems, recording data, conducting tests, and submitting reports.
15. Commissioning.
   a. Commission all HVAC systems per Guide Spec 01460L. Provide trend logs for all equipment that is under control of the DDC system to provide documentation that the equipment is functioning properly. Provide one set in the winter for one week and one in the summer for one week. Trend log will include such items as temperature, valve position and set point and status for all major pieces of HVAC equipment and for all spaces controlled by a thermostat.
16. HVAC Systems – Building complex overall
   a. Boilers:

Amendment #1

1) Verify capacity and capability of existing boilers converted to hot water to serve the system. If capacity is inadequate replace with larger new unit or additional new unit of similar construction and quality.
2) Verify and submit complete calculations concerning stack size and capacity to handle connected boilers. Provide new steel breeching and venting systems if existing is inadequate.
3) ALTERNATE: Replace boilers with high efficiency condensing type boilers direct vented with all combustion air from outside. Provide AERCO, FULTON, or approved equal. Modulating fully condensing boilers. Provide new flue systems. Do not use existing masonry flues.

b. Provide hydronic cabinet unit heaters and convectors for ancillary spaces
c. Provide hydronic unit heaters for caged storage, mechanical rooms and similar spaces.
d. Provide separate dedicated airflow systems for Mail Room in accordance with UFC 4-010-01.
e. Provide dedicated and separate unitary heating and cooling equipment for telephone rooms and IT rooms. Room requirements shall be in accordance with USAR CIO Information Technology Requirements for Military Construction Army Reserve (22 July 1999). Recirculating air conditioning unit will be located in ceiling space of rooms. Air-cooled condensing units will be located out of the way of traffic, in an unobtrusive location, on elevated pad.
f. The buildings shall be maintained at a slight positive pressure. Ventilation will comply with ASHRAE Standard 62 – Ventilation for Acceptable Indoor Air Quality.

17. HVAC Systems – Training Building
a. Training Center Building 115 Main HVAC system
1) Provide a 4-pipe fan coil system, ceiling mounted wherever possible. Fan coils shall not have wall penetrations for outside air. See DOAS below
2) Provide a dedicated outside air handling (DOAS) system to deliver tempered dehumidified "room-neutral" air to meet ASHRAE 62 requirements and to satisfy makeup for required exhausts.
3) OPTION: Kitchen Hoods shall be **provided** in the complete kitchen. Refer to section 01011 for additional requirements.

b. Training Center Building 115A Main HVAC system
1) Existing systems are ducted using rooftop type equipment. Replacement systems shall be of similar type. This can include rooftop equipment of similar equipment count and zone arrangement to the present equipment. It can also include use of use of single-zone equipment feeding into VAV reheat boxes. The VAV boxes would be mounted in the building and serve existing duct segments each representing an existing, or similar, zone. This system would likely require fewer overall handlers compared to the combination of single-zone and multizone air handlers now serving the building.
2) Existing ducts may be reused if in good condition, are adequate in size and location, and are fully cleaned and joints resealed to SMACNA Class B requirements.

Amendment #1

3) Coordinate with roof construction. If building is determined to be provided with a pitched roof, per OPTION: Refer to Section 01011 for description and information.
4) Pad-mounted roof top equipment at grade level having ventilation air intakes shall have air intakes arranged and protected to meet requirements of the Minimum Antiterrorism standards. This standard generally requires intakes 10 feet above grade.
5) As another alternative, provide a 4-pipe fan coil system and DOAS system as described for Building 115. Areas with high outside air requirements may alternatively be equipped with 4-pipe concealed unit ventilators. Unit ventilators where/if used shall be equipped with hot water coils in the reheat position.
6) With either system type, meet ASHRAE 62 requirements and satisfy makeup for required exhausts to maintain building positive pressure.
7) Consider use of air curtains in Assembly Hall, in concert with overall layout and system operation requirements.

18. HVAC Systems – Unit Storage Building 204
    a. Provide required ventilation for the Armorer's work area.
    b. Provide a dehumidifier system in the vault, wall mounted. Provide one or more dehumidifiers, wall mounted with shutoff and check valve for each. (Provide a drain for each humidifier. Avoid cutting vault floor walls or ceiling to the extent practicable. DB contractor may verify functionality, then use or revise existing drainage system (if any is available where needed) as it deems necessary to accommodate dehumidification drainage while minimizing cutting.
    c. Provide hot water unit heaters for the cage storage area.
    d. Remove special ventilation system for the loading dock area and replace with conventional hot water unit heaters and H&V unit.
    e. Revamp existing H&V unit for the caged storage for ventilation. Provide capability for both recirculation of air when unoccupied, and full outside air for summer occupied ventilation.
    f. Provide new heating ventilation system for the former firing range portion of the building, in accordance with the proposed new use of those spaces.
    g. Provide DX cooling of the office areas, with small unitary equipment equipped with hot water coils, or alternatively with ductless split units or PTAC units.
    h. Provide new restroom and shower exhaust systems.
    i. Provide supplementary hot water convectors or cabinet unit heaters each with hot water valve controls, in ancillary areas such as entrances, exterior storage/utility rooms, and in the restrooms.
19. HVAC Systems – OMS Building 198.
    a. Remove existing heating systems from the OMS.
    b. Hydronic in-floor heating system is not required to be provided within the existing OMS Building repair bays. Objective of the heating system is to
        1) Meet code requirements. Some of the code considerations include ventilation of the bays at 1.5 cfm per square foot when functioning as a repair facility; and mounting open flame heaters (where used) at heights above the floor in compliance with the building and National Fuel Gas codes. Design the lowest 18 inches of the maintenance bays in the OMS Building as a hazardous environment, Class 1 – Division 2, NFPA 70. Extend exhaust ductwork branches down to the floor area.

Amendment #1

2) Provide comfort. Provide a heating system that provides reasonable comfort for workers at the floor level and is the most cost effective for installation and operation.

c. D-B Contractor may consider several systems meeting above criteria in the maintenance bays, including:

1) Provide gas fired infrared tube radiant heating units suspended from the roof structure with dedicated combustion air intakes and vents for each bay.

2) Provide a gas fired or hot water unit heater system.

3) In addition to the above, D-B contractor shall provide a indirect gas-fired or hot water fresh air ventilation and exhaust system to meet the ventilation code requirements for a "Repair Garage". The H&V unit shall be provided with a damper/mixing box assembly, and shall be capable of switching to minimum outside air and maximum recirculation when the facility is not in active use as a repair facility. (This will be most of the time.) Changeover shall be both manually selectable, and controllable from the DDC system.

d. Provide for OMS office area a new single zone gas-fired furnace fan coil units with DX refrigerant cooling and remote grade mounted air-cooled condensing unit. Remove existing gas fired unit heaters in the office area. Ventilation to be supplied through outside air connection to furnace fan coil unit return duct. Provide equipment rated for the resulted mixed air temperature that will enter the furnace. Toilet room to have supplemental electric wall-mounted heater with self-contained controls.

e. Controlled waste and flammable storage rooms are to be heated using explosion-proof electric unit heaters with remote wall-mounted thermostats. Exhaust systems where provided shall be explosion proof with class and group rating is called for by application.

f. Tool, parts and supply rooms are to be heated with a single zone gas-fired furnace. Ventilation for units to be supplied through outside air connection to furnace.

g. Exhaust fans interlocked with ducted outside air dampers will provide summer ventilation for the non air-conditioned maintenance bay areas.

h. Exhaust Systems.

1) Remove the existing vehicle exhaust system and provide two (2) suspended vehicle tailpipe exhaust fans and tailpipe hose reels and drops at each maintenance vehicle bay, one at the front and one at the rear of the vehicle. Vehicle exhaust system shall be sized in anticipation of serving turbo charged vehicles in each bay. A manually operated switch located within the wheeled vehicle bay shall control the fan or fans.

2) General exhaust system shall automatically start when either the level of carbon monoxide is detected above set point, or the level of nitrogen dioxide is detected above set point as determined by gas monitor. Also provide manual system operation.

3) Makeup air system shall be provided with 10 percent more capacity than exhaust system. Makeup air system shall temper outside air to the space design heating temperature at a minimum.

4) Provide a new toilet exhaust fan and system.

5) Provide ventilation and exhaust systems for the flammable storage, controlled waste, and other storage rooms called for, per UFC 4-171-05 requirements.
6) Welding exhaust arm hoods are not required.

i. Gas Monitor System.
1) Provide gas monitoring system to monitor wheeled vehicle bays for carbon monoxide and nitrogen dioxide. Provide minimum of one carbon monoxide sensor, and one nitrogen dioxide sensor for each 5,000 sq. ft. of floor area.

20. HVAC Systems – Building Connectors.
a. Connecting corridors between the buildings shall be heated and air conditioned to same standard as the buildings served.
b. The Corridors may be provided with separate systems of similar type and quality to those described for the served buildings, or similar standalone systems.
c. Duct and pipe in these areas shall be routed and installed in special consideration of the fire codes, and any required maintenance of separation of the respective buildings.

5.5 ELECTRICAL

A. General.
1. Design Criteria. Comply with the requirements and recommendations of UFC 4-171-05 Design: Guide for Army Reserve Facilities, dated 1 Nov 2003.
2. Conformance to Code. The electrical system shall be designed in compliance with the current versions of the rules and recommendations of ANSI C2, National Electrical Safety Code; NFPA 70, National Electrical Code (NEC); NFPA 101, Life Safety Code; IES Lighting Reference Guide and Application Guide, Military Handbook 1012/3; and applicable state and local codes.
3. Design Analysis (DA). Provide a Design Analysis explaining the systems required by UFC 4-171-05 and as otherwise required for the project. Include the calculations required by UFC 4-171-05 and as otherwise required to substantially justify the systems design. Explain in summary form, all of the electrical, fire alarm and communications systems including backup calculations.
4. Provide electrical demolition of the three existing incoming secondary feeds to the Training Building from the existing 500kva pad-mount transformer/meter (transformer owned and maintained by PSE&G. Coordinate transformer size with PSE&G. Provide building load summary to PSE&G per their guidelines. Provide electrical demolition of distribution equipment, light fixtures, branch circuit wiring, devices, telephone system, and fire alarm system.
5. Provide design and installation of new exterior secondary feed from transformer, interior electrical power distribution, interior and exterior lighting, exit and egress lighting, fire alarm system, security system, public address system, and telephone and data systems.
6. Provide lighting calculations (including egress lighting calculations), electrical load calculations, voltage drop calculations, exterior lighting calculations using industry standard software, electrical short circuit and protective device coordination analysis. Coordinate building load with PSE&G, pay all fees to PSE&G associated with upgrading of transformer, primary conductors, metering, etc. Calculations shall be prepared by a Registered Professional Electrical Engineer. The short circuit and

protective device coordination analysis shall be done using industry standard computer software and the reports shall be furnished for Government review.

7. Seismic Protection. Provide seismic protection for electrical equipment and electrical systems as required for the project seismic zone in accordance with all applicable codes.
8. Materials and Equipment. All materials and equipment shall be the standard catalogued products of manufacturers regularly engaged in the production of such equipment and material, and shall be the manufacturer's latest design. All equipment and material shall conform to the requirements of American National Standards Institute (ANSI), American Society of Testing and Materials (ASTM), National Electrical Manufacturer's Association (NEMA), National Fire Protection Association (NFPA) or other national trade association as applicable. Where standards exist, materials and equipment shall bear the label and be listed by Underwriters Laboratories, Inc. (UL) or other Nationally Recognized Testing Laboratory (NRTL) per the NEC.
9. Provide a nylon pull cord in empty conduits, sleeves, and similar provisions, and in telephone and data system conduits whether they are empty or contain cables.

B. Electric Power Distribution.

1. Subject to confirmation of adequate capacity, the existing 120/208 volt, 3 phase, primary 500kva transformer servicing the Training and OMS building shall be remain, coordinate with PSE&G. The D/B Contractor shall be responsible for the secondary electrical connection to the transformer/meter (all utilities past meter are owned by Reserve Center). The D/B contractor shall coordinate the new electrical service with the PSE&G for all requirements and divisions of responsibility and shall pay all fees associated. At a minimum, the contractor shall provide the underground primary raceways, the underground secondary conductors, trenching, and any other items required by the utility. Coordinate all outages with the 77th RSC for time period(s) available for service switchover.
2. Dedicated Electrical Equipment Space. The main electric room shall be arranged to accommodate the new main switchboard, space for an additional (future) distribution section, new distribution board(s), new panelboard(s), space for 20% (not less than one) additional (future) panelboard(s), new fire alarm control panel, new lighting control equipment, and new additional equipment as required. Coordinate access and egress requirements. Electrical equipment dedicated space and working space will be in compliance with the NEC.
   a. All electrical closets will be sized and laid out to accommodate the electrical equipment required and space for additional (future) panelboard(s). Coordinate locations for most efficient distribution. Electrical equipment dedicated space and working space will be in compliance with the NEC.
   b. Provide conductors sized to prevent a voltage drop exceeding 3 percent to the farthest receptacle, mechanical equipment, light fixture, etc. The maximum total voltage drop on both the feeders and the branch circuits to the furthest load shall not exceed 5 percent.
3. Nonlinear Loads. In areas (including but not limited to open office spaces and NOC/ARNET) where nonlinear load type equipment predominates, such as computers, printers, uninterruptible power supply (UPS), motors with variable speed drives, electronic ballasts and dimmers and other similar loads, IEEE Std. 1100 "Power and Grounding Sensitive Electronic Equipment", and IEEE Std. 519 "Practices and Requirements for Harmonic Control in Electrical Power Systems"

shall be used as design guides. Provide dedicated K-Rated transformers with appropriate K-Rating and dedicated panelboard with 200% rated neutral busses and feeders.

4. Provide grounding electrode system as called out in UFC 4-171-05 such that the resistance of any individual made electrode has a resistance to ground of 25 ohms or less and the overall grounding electrode system has a resistance to ground of 5 ohms or less. Ground the main electrical service switchboard ground bus to the metallic water service pipe and building structural steel. Distribution panels, panelboards shall be connected directly to the building service ground. The Telecommunications Main Grounding Busbar (TMGB) located in the main comm. Room (telephone service entrance room containing the Main Distribution Frame MDF) shall be directly connected to the main building grounding system. The remaining communications rooms fed from the main comm. room shall have their equipment racks grounded to a busbar within that room, that connects directly to the TMGB. A separate green ground conductor, sized per N. E. C. Table 250-95, shall be installed in all branch circuits, and feeders.
5. Main Switchboard. Provide a new main switchboard and distribution panels equipped with circuit breakers to serve panelboards, existing and new HVAC equipment, and other large loads. The main switchboard and distribution panels shall be provided with a copper bus.
   a. The main switchboard will be service entrance rated and have the neutral bus connected to the ground bus by a properly sized main bonding jumper.
   b. Switchboard shall be designed with a spare breaker capacity of at least 10%.
6. Panelboards. Locate in the main electric room, electrical closets, and out of the way corridors. Electrical equipment dedicated space and working space will be in compliance with the NEC.
   a. Panelboards shall be located to minimize voltage drop, efficiently serve equipment, and provide system flexibility. Coordinate locations with other disciplines to avoid conflicts. Electrical equipment dedicated space and working space will be in compliance with the NEC.
   b. Panelboards shall be designed with a spare breaker capacity of at least 10%.
   c. Panelboard load separation requirements shall consist of separate distinct panels for lighting, miscellaneous power, HVAC, and computer load.
7. Provide conductors with type THHN/THWN insulation for conductor sizes #12 through 1/0, and type XHHW insulation for conductor sizes #2/0 and larger. All conductors shall be copper. All conductors shall be routed in conduit. Minimum conductor size shall be #12 AWG. MC cable or equivalent is not permitted for branch circuiting feeder distribution, or motor feeds, etc.

C. Motors.
1. Motor Efficiencies. Minimum motor efficiencies shall be either in accordance with Energy Star requirements or in accordance with DOE Buying Energy Efficient Products Recommendations (refer to www.eren.doe.gov/femp/procurement for recommended efficiencies). Provide premium efficiency motors where possible. Premium efficiencies shall meet or exceed the specifications of Baldor Super-E Products. Applications that require definite purpose, special purpose, special frame, or special mounted polyphase induction motors are excluded from these efficiency requirements.
2. 120-volt motors will be specified to have integral thermal overload protection when available. If integral thermal overload protection is not available, provide manual

thermal overload starters. Provide combination motor starter–disconnect controllers for polyphase motors. Provide reduced voltage starters for motors over 25 HP. Coordinate type with motor design and starting torque requirements.

3. Provide disconnect switches for all motors and equipment in accordance with the NEC. Provide motor-rated toggle switches for 120-volt motors with integral thermal overload protection. The manual starter may serve as the disconnect means for 120 volt motors without integral thermal overload protection when properly located. Combination motor starter-disconnect controllers may serve as the disconnect means for polyphase motors when properly located. Provide additional non-fused disconnect switches within sight of the motor when the starter-disconnect cannot be placed within sight of the motor.
4. All new motors 1/2 HP and larger shall be specified 3-phase 208 volts.

D. Receptacles and Branch Circuits.

1. All existing receptacles, power connections and all associated conduit and wire, shall be removed.
2. All general-purpose receptacles shall be 20 amps, NEMA WD 1. Provide ground fault circuit interrupter receptacles (or circuit breakers) in bathrooms and outdoors. Provide new grounding type receptacles in existing locations and as directed by the using agency. Receptacles to be manufacturer's standard nylon face. Provide type 302, satin finish, and stainless steel coverplates.
   a. Storage Rooms. Provide a minimum of one general-purpose 120 volt, 20-ampere duplex receptacle outlet in each room.
   b. Offices, mechanical rooms and electrical rooms. Provide a minimum of one general-purpose receptacle on each wall. In offices where walls exceed 12 feet, provide an additional duplex receptacle for each additional 12 feet of wall or fraction thereof. Receptacle spacing shall not exceed 12 feet.
   c. There shall be no more than 6 general purpose receptacles on one circuit and no more than 2 for dedicated computer load circuits.
3. Provide receptacles or power connections for utilization equipment included in the project as well as equipment furnished by the Government. Government furnished utilization equipment may include (but is not limited to) computers, fax machines, printers, photocopy machines, office equipment, vending machines, kitchen equipment, computer network equipment, security system equipment, card readers, motorized gates, general maintenance equipment, vehicle maintenance equipment, battery chargers, and military equipment.
4. Provide a GFI receptacle in elevator pit connected to mercury vapor light fixture. Elevator machine room shall contain one enclosed shunt trip circuit breaker for elevator motor connected to main switchboard, one enclosed circuit breaker for elevator car interior power, and one enclosed circuit breaker for power to car HVAC. The elevator installation shall comply with NFPA 101 and ANSI A17.1.
5. Provided disconnect and power connection to all overhead doors. Connection to motors and controls shall be per overhead door manufacturers recommendations.
6. Provide power connection to all HVAC and Plumbing equipment. Disconnects, Starters, Variable Frequency Controllers, Fused Disconnects, Motor rated overload protection switches, and single point connections shall be provided per equipment manufacturer's recommendation. Coordination with mechanical contractor is required.
7. Receptacles located in hazardous areas shall be mounted at a minimum of 18 inches above finished floor in vehicle maintenance, battery, and flammable storage areas.

Electrical outlets, devices and equipment located in battery or flammable storage areas or mounted at or below 18 inches AFF in vehicle maintenance areas shall meet NFPA 70, Article 511, Class 1, Division 2.

8. Provide multi-outlet raceway above workbenches with receptacles 12 inches on center in computer (ARNET/NOC/RCAS), Armorer and electrical/ communication/repair rooms. Provide a dedicated, isolated ground circuit for each multi-outlet raceway.
9. Provide two quadraplex receptacles for each telephone rack and each data communications rack. Provide each of these receptacles with a dedicated neutral and ground.
10. Workstations.
    a. Provide each stand-alone, system or non-system furniture workstations with a quadraplex receptacle for computer loads (maximum of 2 computers (or 2 quads) per circuit). Provide 3 duplex receptacles per each non-system furniture workstation for misc. loads (maximum of 6 duplex per circuit). Computer circuits shall have dedicated neutrals and dedicated grounds.
    b. Provide each group of four (or fraction thereof) modular, system furniture workstations with a ten (10) wire furniture feed consisting of a four (4) phases, (4) neutrals, and (2) grounds. Wire size shall be upsized in accordance with NEC Article 310-15(b).
    c. Power feeds for all furniture connections (receptacles, power poles, columns, etc.).
11. Provide dedicated 120v outlet in arms vault for dehumidifier.
12. Provide dedicated 120v current for connects to electric hand dryers in all restrooms.
13. All receptacle loads in offices and admin areas shall be wired with dedicated neutrals and shall be fed from separate panelboards not feeding lighting fixtures, mechanical equipment, general purpose outlets, and other miscellaneous loads. These office/admin panelboards shall be provided with 200% rated neutral busses and shall be fed with double sized neutral conductors into the panelboard. If these panelboards are fed from a 277/480V, 3-phase distribution, the contractor shall provide “k” rated transformers to step the voltage down to the 200% rated neutral panelboards.

E. Exterior Lighting. Exterior lighting shall comply with state and local codes, IES recommendations, and UFC 4-171-05 Design: Guide for Army Reserve Facilities, dated 1 Nov 2003. POV parking area lighting for IES “enhanced security” level is required for this project. MEP area shall be provided with area security lighting with a 1.0 footcandles with a uniformity ratio of 8:1 (average-to-min). Provide IES “enhanced security” light levels on sidewalk at front of building.

1. The new lighting design shall have fixtures directed so it doesn’t have direct glare across the property lines and shall limit spill light across the property line to the levels recommended by the International Dark Sky Association. The International Dark Sky Association, Model Lighting Ordinance, recommends the following horizontal light levels at eye level at the property line : (a) Areas of medium ambient light levels : urban residential areas = 2 lux (0.2 foot-candles) and (Areas with high ambient brightness, normally urban areas mixed residential and commercial use, a high level of nighttime activity = 6 lux (0.6 footcandles).
2. The flagpole and exterior facility monument sign shall be properly illuminated.
3. Exterior lighting fixtures (wall-packs, canopy lights) shall be removed and replaced, and a new time switch with photocell override control provided. Control shall be photo on/time off, time on/photo off.

Amendment #1

4. Existing POV and MEP area lighting shall be replaced with 400 watts metal halide lamp light fixtures. Lights shall provide a minimum of 1.0 footcandle for MEP and 0.5 footcandle for POV. Provide new poles and pole bases. Existing conduit is to be reused if condition is found to be suitable for new wire. Poles shall be brushed aluminum with polyester dark bronze powder paint.

F. Interior Lighting. Interior lighting shall comply with state and local building codes, International Building Code, the National Electrical Code, IES recommendations, and DG 1110-3-107.

1. All existing light fixtures shall be removed; all associated conduit and wire shall be removed.
2. Provide a new lighting system consisting of: 2 foot x 4 foot, lensed, lay-in fluorescent light fixtures in non-exclusive offices, classrooms, corridors, toilets and general areas; 2 foot x 4 foot parabolic louver, lay-in fluorescent light fixtures in open office and exclusive office spaces; and guarded industrial fluorescent strip lighting in mechanical and storage rooms. The building directory shall be provided with a fluorescent source in the top panel.
3. Efficiency. Interior lighting will be both efficient and color corrected. Color Rendering Index (CRI) of 85 or better and a standard lighting color of 3500 K are required. Minimum efficiency standards for lighting are as follows:
   a. Fluorescent T-8 tubes, 4 feet and longer: 90 lumens/watt.
   b. Fluorescent T-8 tubes less than 4 feet: 80 lumens/watt.
   c. Compact fluorescent and other lamps: 50 lumens/watt.
4. Lighting levels for the individual areas shall conform to those indicated in UFC 4-171-05 and IES recommendations. The light fixtures to be used for each functional area are scheduled in Appendix C. The fixtures scheduled represent the minimum quality and type for each functional area. Additional types of fixtures and fixtures of higher quality may be introduced as necessary to meet the design intent and to accommodate specific user needs.
   a. In calculating footcandle levels, use the surface reflectances of the proposed finish materials or the values given in the Design Guide, whichever is lower.
5. Batteries for emergency lighting fixtures and battery fluorescent ballasts shall have a minimum warranty of five years and a minimum expected battery life of 10 years.
6. Battery fluorescent ballast shall provide a minimum of 1100 lumens continuously for 90 minutes.
7. Provide emergency lighting per NFPA 101 utilizing battery fluorescent ballasts in rooms with lay-in fixtures and battery emergency lighting units in rooms without lay-in fixtures. Battery operated exit light shall be used. Exit signs shall be LED. All emergency and exit lights shall be connected to the room lighting circuit, ahead of any local switching. An emergency lighting fixture shall be installed in all mechanical rooms.
8. The security light required outside the Arms Vault shall be vandal-resistant and shall be equipped with a backup power source. It shall not be switched.
9. Light switches shall be 20 amp, 120/277 volt AC, specification grade, standard gray nylon face.
10. Provide occupancy sensors per the Design Guide and MDS Standards.
11. Provide type 302, satin finish stainless steel coverplates.
12. Provide 120V mercury Vapor light fixtures in all elevator pits.

Amendment #1

13. Fluorescent High Bay fixtures utilizing T5 lamping shall be used in the Maintenance Bay.
14. Provide emergency egress lighting throughout all paths of egress including on the exterior of the building at exit doors. Emergency lighting shall be such that failure of any individual lighting element will not leave the space in total darkness. Emergency lighting shall be in accordance with NEC Article 700.

G. Fire Alarm System.

1. Existing fire alarm system is to be removed including all wiring and conduit associated.
2. Provide new Fire Alarm Control Panel (FACP), Remote Annunciator Panel (FAA), alarm initiating devices, alarm notification appliances, signaling devices, wiring, and testing in accordance with UFC 4-171-05, NFPA 72, NFPA 101 and UFC 3-600-1.
3. FACP: Provide a complete UL listed analog, programmable, addressable system with full control, supervisory, alarm, signal, display, and battery backup features in compliance with NFPA 72. Locate in the main electrical room. Comply with UFC 3-600-1. Comply with UL 864.
4. FAA: Provide a Remote Annunciator Panel that indicates alarm conditions by device and with alarm silence control. Locate in the main entrance lobby, unless directed otherwise by the Local Authority Having Jurisdiction.
5. Alarm Initiating Devices: Provide addressable alarm initiating devices in compliance with NFPA 72 including:
   a. Double action manual pull stations located at main exit, exits adjoining assembly occupancies, and boiler room exit.
   b. Photoelectric smoke detectors for fire-rated door hold-opens, fire shutter control, and one above the FACP.
   c. Photoelectric duct smoke detectors in all HVAC main supply ducts when system is greater than 2000 cfm, and in return ducts when system is greater than 15000 CFM. Provide duct smoke detectors to control fire/smoke dampers. An alternative to duct smoke detection is area smoke detection of associated smoke compartments. This may be included in the design when more economical than multiple duct smoke detectors.
   d. Supervision and monitoring of the fire sprinkler system if this design option is selected. Provide interface modules to properly supervise each fire protection service and sprinkler zone tamper switch and to properly monitor each fire protection service and sprinkler zone flow switch.
6. Notification Appliances: Provide audible and visual notification appliances in compliance with UFC 3-600-1 and NFPA 72 including:
   a. A weatherproof alarm bell or horn located on the outside of the building at the fire protection water service “Siamese” connection in accordance with NFPA 13.
   b. Alarm horns located in accordance with the Americans with Disabilities Act – Accessibility Guidelines (ADA-AG).
   c. Visual notification appliances in common use spaces such as corridors, open office space, toilet rooms, break rooms, and similar spaces in accordance with the ADA-AG. Provide 110 candela strobes in the second floor admin common space of room 115A.
7. Signaling devices will typically include a telephone auto dialer with two dedicated telephone lines to communicate with a central station monitoring service. The Government is responsible for contracting for central station monitoring service.

Amendment #1

8. Provide all fire alarm system initiation, notification, signal, and control wiring in conduit.
9. Alarm initiating devices will be connected to Signal Line Circuits (SLC), Style 5 or 6, in accordance with NFPA 72.
10. Alarm notification appliances will be connected to notification appliance circuits (NAC), Style Z, in accordance with NFPA 72.
11. Provide power to the FACP from a locking circuit breaker.
12. Provide magnetic door holders at the locations indicated in the table in Part 5 Article Architectural Section of this document.
13. Provide acceptance testing. Preliminary testing as required to complete and submit the Certificate of Completion, in accordance with NFPA 72. Final testing to complete and submit the Inspection and Testing Form, in accordance with NFPA 72.
14. Provide a shunt trip in an enclosed circuit breaker for shutdown of the elevator upon activation of the flow switch in the sprinkler system. There shall be a 120v connection to a fire alarm voltage monitoring relay which is connected to the shunt trip device. The shunt trip shall also be connected to the fire alarm control panel through an isolation relay. All work shall be in accordance with NFPA 72.
15. The control and annunciator panel must be capable of future expansion without the requirement for changes in hardware, software or components.
16. The control and annunciator panel shall be modular, surface mounted in a steel cabinet, with hinged door and cylinder lock.
17. The control and annunciator panel shall have an LED/LCD display panel which is clearly visible when the door is closed and mounted at eye level.
18. Loss of power, including batteries shall not require the manual reloading of the program and upon restoration of power, startup shall be automatic and not require any manual operations.
19. The system shall have battery backup power using sealed, rechargeable storage batteries mounted in a steel cabinet of matching finish, surface mounted below the control panel and capable of supplying standby power for 72 hours after ac power has been disconnected followed by supplying a 15 minute alarm period.
20. The annunciator panel will be mounted conspicuously in the immediate vicinity of the main entrance lobby at a location agreed upon with the owner's Project Manager.
21. The control panel will be capable of being centrally monitored and contain all hardware, software, and programming required to do so.
22. The control panel installation will include EMT enclosed telephone wiring to accommodate 1 dedicated and 1 capture line from the panel to the main telephone terminating location in the facility. The wiring at the panel will be terminated at an RJ31X modular connector.
23. The control panel will be equipped with surge protection for both the equipment connected to the ac connection and the 24-volt dc equipment as per NFPA 70.
24. The control panel should be an Edwards EST3 system or its equivalent.
25. Provide separate loops as such: a loop for pull stations, a loop for smoke and heat detectors, a loop for tamper, flow and pressure switches. The building shall also be split up into separate zones between the OMS, 115/115A, and the caged area.

H. Communications – Information Technology (IT) and Telephone Systems.

1. The D/B contractor shall provide a turn-key IT and Telephone system including all wiring, outlets, infrastructure, boxes, raceways including cable tray as required, racks, backboards, patch panels, 110 blocks, patch cords, fiber optic switches, wire management, etc., for a complete and working system.

Amendment #1

a. Investigate outside plant capacity and expansion requirements with the local service provider(s).
b. Design an outlet layout based on the final furniture plans.
c. Provide a receptacle next to each communication and data outlet and power to each modular furniture module as required.

2. Telephone switch and handsets are not in contract.
3. The local telephone provider is Verizon. The contractor shall coordinate with Verizon for service entrance cabling requirements.
4. All telephone and data cable and jacks shall be Category 6.
5. Provide a voice and data outlet per each pre-wired or non-wired furniture workstation. Contractor shall provide jacks in the pre-wired furniture.
6. Each individual office shall be provided with 2 voice and 2 data jacks.
7. Provide data jacks in all administrative areas for general purpose, fax machines, copiers, and printers.
8. Jacks shall be Category 6, 8-position, and shall be wired for EIA/TIA 568A.
9. Voice jack and cabling shall be color-coded green. Data shall be red. If more than 1 cable and jack are provided within a box, the second data cable and jack shall be yellow.

I. Security Access.

1. Buildings shall be provided with a card key system conforming to the 77th RRC requirements. The card key system shall also be compatible with the Bid Option keypads at the front gates.
2. Card key system shall be provided at the following locations: Training Center Vestibule 1, Vestibule 2, Vestibule 3, and OMS Building Office S-6. All doors with card keys shall also be equipped with balanced magnetic switches (door position switch)
3. The intercom and push button station for control of MEP and POV entry gates shall be provided and located per owner.
4. BMS (Door Contact Switches) – Shall be provided at all exterior and overhead door locations and shall report to the Card Key System.
5. Provide all exterior doors with BMS (Door Contact Switch).
   a. Electric Door Strikes: Coordinate with door hardware. Provide power and control wiring as required to support the selected entry control scheme.
6. Provide hardware, software, wiring, devices, control interfaces, credential cards, and testing as required for a complete system acceptable to the Government.

J. Special Requirements.

1. Provide public address system with amplifier, speakers, and microphone with stand in the Assembly Hall. Provide two microphone jacks at each end of space, and sufficient cord to allow flexibility in using the microphone. Provide paging mute input to interface with “Mass Notification Public Address” paging system. Provide AM/FM receiver with antenna, CD player and cassette deck.
2. DOD is required to provide mass notification for new and existing buildings when required by UFC 4-010-01. Beginning with the fiscal year 2004 construction program, mass notification is required in all new inhabited buildings, including new primary gathering buildings and new billeting. Mass notification is required in existing primary gathering buildings and existing billeting when implementing a project exceeding the replacement cost threshold specified in UFC 4-010-01. Mass notification is recommended in other existing inhabited buildings when implementing

a project exceeding the replacement cost threshold. Mass notification is required for leased buildings, building additions, and expeditionary and temporary structures (see UFC 4-010-01). Provide a "Mass Notification" (UFC 4-020-01) public address system with amplifiers, speakers, microphone, zone paging adapter to interface with telephone system, and paging mute output to interface with Assembly Hall public address system. The "Mass Notification" public address system shall be a single zone, all call system that annunciates in all occupiable spaces (including the OMS and MEP). The system shall be accessed via the telephone system by dialing a designated telephone extension. The public address system head end equipment and back up microphone shall be located in a rack, coordinate location with owner.

K. Emergency Generator.

1. There is an existing emergency generator on site, which has been given to the unit. The generator is an Onan, 250kw/312kva, 120/208v, 3-phase genset with a 1000a, 3-pole automatic transfer switch and a 250-gallon diesel fuel tank. The Model is OTC 41000C.
2. The emergency generator shall be hardwired for automatic transfer of loads. The contractor shall coordinate the loads, which will be supplied by the generator with the owner. Life safety equipment such as fire alarm, emergency lighting etc., is presently specified with integral battery back-up. The contractor shall coordinate the use of the genset for life safety loads, in lieu of integral battery back-up, with the owner. The load and distribution equipment on the emergency generator shall be adequately sized for the capacity of the generator. The contractor shall have Onan perform a gen sizing calculation. The contractor shall perform a safety run test and engine load run test in conformance with the Onan's recommended test procedures.

PART 6 - ADDITIONAL PROJECT REQUIREMENTS

6.1 SUBMITTAL REGISTER AND SHOP DRAWING REVIEW AND APPROVAL

A. The individual Specification Sections indicate the shop drawings and other submittals required for this Project. The Contractor shall prepare a Shop Drawing Submittal Register, in both electronic and hard copy format, for Government approval, using Form 4288.

B. Following Submittal Register approval, the Contractor shall have all required submittals prepared and submitted to the Contractor's designers-of-record, using Form 4025.

C. The Contractor's designers shall review the submittals and recommend Contractor approval or disapproval, designating one of the following three actions to be taken. Designers of record shall sign approved submittals.

1. "Approved" – Straight approval only; items meet all requirements of the plans and specifications.
2. "Approved as noted." – Approved subject to corrections noted on the submitted data or the submittal form, which will result in compliance with all requirements of the plans and specifications.
3. "Not approved – resubmit" – Items do not meet all requirements of plans and specifications; designer is to note reasons for disapproval on the submittal form.

D. Equipment or material that does not meet all requirements of the plans and specifications shall not be approved. Requests to substitute equipment or material may be considered by the Government only if proposed by the Contractor, and accompanied by:
   1. A written explanation describing all points in which it differs from the Project requirements.
   2. A written description of how its substitution will affect other items.
   3. The reason for the submittal.
   4. The amount of credit (or increase) in the construction contract amount should the Government approve the substitution.

E. Contractor shall maintain an up-to-date copy of the Submittal register at all times, along with copies of all submittals and designer responses. Contractor shall promptly provide Government with two complete copies of all approved submittals, For Information Only (FIO).

6.2 WARRANTIES

A. Required warranties are indicated in the Specifications. Contractors are encouraged to offer extended warranties on mechanical equipment and controls, roofing, and other items or systems, either as a part of their proposal (betterment) or an addition to the proposal cost. If Contractor offers as an addition to the proposal cost, such extended warranties will not be a part of the Government's evaluation and selection process.

6.3 PERMITS, AND REGULATORY AGENCY AND UTILITY COORDINATION

A. The Contractor is responsible for making all applications and obtaining required municipal and regulatory agency coordination, reviews, permits, inspections and approvals, and is responsible for payment of any associated fees or charges. If Government information, signatures, names or addresses are required for applications, approvals or permits, the D/B Contractor is responsible for obtaining same. This is a Federal Government project; therefore some reviews, permits, inspections and approvals are not required. The D/B Contractor is responsible for identifying such requirements for a commercial project and verifying with the Government which of these will be waived.

6.4 GOVERNMENT REAL ESTATE FORM 1354

A. The D/B Contractor shall assist the Contracting Officer in filling out the draft Form 1354, and associated equipment lists. The D/B Contractor shall assist the 77th RRC in verifying the categories and items to be included and in providing area and cost information required. Refer to Appendix A of this Section 01010, for a sample Form 1354.

6.5 PRESENTATION PHOTOGRAPHS

A. Four sets of copies of "Before" and "After" construction digital photographs in "tif" format, on a CD and 8 ½" x 11" color copies shall be provided by the D/B Contractor of the following areas:
   1. Exterior views

Amendment #1

a. Approaching the site from the East
b. Approaching the site from the West
c. South elevation
d. North elevation
e. The Training Center Front Entry
f. The Training Center Employee Entry.

2. Interior views
   a. Assembly Hall
   b. Entry Lobby
   c. Unit Common
   d. Unit Exclusive Office
   e. Classroom
   f. Corridor
   g. Unisex Toilet
   h. Men's Toilet / Shower
   i. Women's Toilet / Shower
3. Copies and CD to be distributed to
   a. IMAAR – Fort McPherson, GA
   b. Mary Ann Just / Mike Ryan, Louisville District Corps of Engineers
   c. Raymond Scott, 77th RRC – Fort Totten, NY
   d. Arthur Patterson, 77th ARIM Gen Engineer

Amendment #1

APPENDIX 'A'

SAMPLE FORM 1354

Amendment #1

APPENDIX 'B'

5034-R FUNCTIONAL SPACE DETAILS

Amendment #1

APPENDIX 'C'

LIGHT FIXTURE SCHEDULE

Amendment #1

APPENDIX 'D'

FIRE PROTECTION / LIFE SAFETY CODE "DRAFT" SUBMITTAL

CODE DETERMINATIONS

Amendment #1

APPENDIX 'E'

FIRE FLOW DATA

Amendment #1

APPENDIX 'F'

WEATHER DESIGN DATA

Amendment #1

APPENDIX 'G'

INTERIOR DESIGN REQUIREMENTS

Amendment #1

APPENDIX 'H'

DRAWINGS

These are provided in a separate folder on the CD.

Amendment #1

APPENDIX 'I'

TOPOGRAPHIC SURVEY

To be provided by the D/B Contractor.

Amendment #1

APPENDIX 'J '

#1

GEOTECHNICAL

LANGAN
ENGINEERING & ENVIRONMENTAL SERVICES

Bernard F. Langan, P.E.
David T. Gockel, P.E.
George E. Derrick, P.E.
George P. Kelley, P.E.
Michael A. Semeraro, Jr., P.E.
Nicholas De Rose, P.G.
Cabot M. Hudson, P.E.
Andrew J. Ciancia, P.E.
George E. Levent s, P.E.

Gerard M. Coscia, P.E.
Colleen Costello, P.G.
Rudolph P. Frizzi, P.E.
Ronald A. Fuerst, C.L.A.
Michael M. Goldstein
Cristina M. González, P.E.
Sam B. Ishak, M.C.S.E.
William C. Lothian, P.E.
Leonard D. Savino, P.E.
Steven Uelland, P.E.
Gerald J. Zambrella, C.E.M.

Roger A. Archabal, P.E.
Jorge H. Berkowitz, Ph.D.
Gregory L. Biesiadecki, P.E.
Michael E. Cotreau, P.E.
Gregory M. Elko, P.E.
Edward H. Geibert, M.S.
Joel B. Landes, P.E.
John J. McElroy, Jr., Ph.D., P.E.
R. S. Murali, M.S.
John D. Plante, P.E.
Alan R. Poeppel, P.E.
George A. Reeves
Joseph E. Romano, P.L.S.

3 May 2004
Via Fax (859) 389-8879

Jon Miller
The Mason and Hanger Group
300 West Vine Street Suite 1300
Lexington, Kentucky 40507-1814

Re: Results of Subsurface Investigation
Caven Point Reserve Center
Jersey City, New Jersey
Langan Project No. 1896101

Dear Jon:

In accordance with our contract for the above referenced site, we have completed the boring at the location of the proposed elevator and provide the following summary of findings.

The subsurface conditions encountered generally consist of 12 feet of fill (primarily sand) overlying 2 feet of silt which is underlain by 6 feet of sand. The sand is underlain by 15 feet of soft organic silty clay/clayey silt which is underlain by 34 feet of sand. A 5-foot-thick layer of silt was encountered beneath the sand layer, which was underlain by clay to the end of the boring at a depth of 72 feet.

A copy of the boring log with the detailed soil descriptions and corresponding blowcounts is attached for review.

If you have any questions, please call me directly at (201) 398-4584.

Very truly yours,
Langan Engineering and Environmental Services, Inc.

Leonard D. Savino, P.E.
Senior Associate

Enclosure(s): Log of Boring B-1

G:\Data T\1896101\Office Data\Correspondence\Results of Boring.doc
NJ Certificate of Authorization 24GA27996400

LOG OF BORING NO: B-1

Project Name	Caven Point Army Reserve Facility	Project No.	1896101
Boring Location	Jersey City, New Jersey	Elevation and Datum	15 +/-
Drilling Company	Jersey Boring & Drilling Company	Date Started 4/15/2004	Date Finished 4/15/2004
Drilling Equipment	CME 55 Truck Mounted Drill Rig		
Size and Type of Bit	3 7/8" Tri-Cone Roller Bit	Completion Depth 70 ft	Rock Depth N/A
Casing	3" casing		
Casing Hammer	Weight n/a	Drop n/a	Water Level 8 ft
Sampler	2 inch O.D. Split Spoon	Driller	Carlos Tirado
Sampler Hammer Weight	140 lb	Drop 30"	Inspector Stephanie Dubyna

Depth (ft)	SAMPLE No.	Type	Recov. (in)	SPT* bl/6"	DESCRIPTION	Material	REMARKS
1	S-1	SS	4"	90 24 8 4	Asphalt	ASPHALT	Boring started at 8:47 am.
3	S-2 (a/b)	SS	12"	7 8 6 5	Tan c-f SAND, tr. f gravel, tr. Clay [FILL] (moist) Gray-black c-f SAND, tr. f gravel [FILL] (moist)	FILL	Petroleum-like odor noted.
5	S-3	SS	18"	8 9 7 12	Brown-black c-f SAND, tr. f gravel, tr. brick, tr. organics [FILL] (moist)	FILL	
7	S-4	SS	16"	36 21 10 10	Gray-red c-f SAND, tr. f gravel, tr. silt [FILL] (moist)	FILL	Petroleum-like odor noted.
9	S-5	SS	8"	14 12 7 22	Brown sandy SILT (wet)	SILT	Water table at 8 ft.
11	S-6	SS	12"	13 12 11 11	Brown c-f SAND, tr. f gravel, tr. silt (wet)	SAND	Petroleum-like odor noted. Oil-like sheen noted on soil.
13	S-7	SS	14"	8 10 6 16	Brown-red silty f SAND, tr. clay (moist)	SAND	Switched to Rotary Mud Drill.
15	S-8	SS	4"	6 2 5 2	Gray-red c-f SAND, tr. f gravel, tr. silt (moist)	SAND	Pushed casing to 14 ft.
17	S-9	SS	14"	9 5 5 4	Gray SILTY CLAY/CLAYEY SILT (wet)		Drill to 20 ft. Strong organic odor.
19							
20							

*Standard Penetration Test N-Value

LANGAN Engineering and Environmental Services, Inc.
River Drive Center 1, Elmwood Park, NJ 07407

LOG OF BORING NO: B-1

Project Name	Caven Point Army Reserve Center	Project No.	1896101
Boring Location	Jersey City, New Jersey	Date Started 8/16/ 4/15/2004	Date Finished 4/15/2004
Drilling Company	Jersey Boring & Drilling Company		

Depth (ft)	SAMPLE No.	Type	Recov. (in)	SPT* bl/6"	DESCRIPTION	Material	REMARKS
21	S-10	SS	24"	1	Gray SILTY CLAY/CLAYEY SILT (wet)	SILTY CLAY/CLAYEY SILT	
22							Drill to 25 ft.
23							
24							
25							
26	S-11	SS	6"	1	Same as previous.		
27							Drill to 30 ft.
28							
29							
30							
31	S-12	SS	10"	4 9 13 11	Same as previous.		
32					Red f SAND, some silt (wet)	SAND	Drill to 35 ft.
33							
34							
35							
36	S-13	SS	10"	16 16 16 18	Red f SAND, some silt (wet)		
37							Drill to 40 ft.
38							
39							
40	S-14	SS	14"	14 24 26 32	Turns Brown (wet)		
41							Drill to 45 ft.
42							

*Standard Penetration Test N-Value

LANGAN Engineering and Environmental Services, Inc.
River Drive Center 1, Elmwood Park, NJ 07407

LOG OF BORING NO: B-1

Project Name	Caven Point Army Reserve Center	Project No.	1896101
Boring Location	Jersey City, New Jersey	Date Started 4/15/2004	Date Finished 4/15/2004
Drilling Company	Jersey Boring & Drilling Company		

Depth (ft)	SAMPLE No.	Type	Recov. (in)	SPT* bl/6"	DESCRIPTION	Material	REMARKS
43						SAND	
44							
45	S-15	SS	12"	6 10 12 10	Brown-red f SAND, tr. silt (wet)		
46							Drill to 50 ft.
47							
48							
49							
50							
51	S-16	SS	14"	6 4 5 45	Brown-red f SAND, tr. silt (wet)		
52							Drill to 55 ft.
53							
54							
55	S-17	SS	14"	6 4 5 45	Brown-red f SAND, tr. silt (wet)		
56							Drill to 60 ft.
57							
58							
59							
60	S-18	SS	12"	9 8 10 10	Brown-red f SAND, tr. silt (wet)		
61							Drill to 65 ft.
62							
63							
64							

*Standard Penetration Test N-Value

LANGAN Engineering and Environmental Services, Inc.
River Drive Center 1, Elmwood Park, NJ 07407

LOG OF BORING NO: B-1

Project Name	Caven Point Army Reserve Center	Project No.	1896101
Boring Location	Jersey City, New Jersey	Date Started 4/15/2004	Date Finished 4/15/2004
Drilling Company	Jersey Boring & Drilling Company		

Depth (ft)	SAMPLE No.	Type	Recov. (in)	SPT* bl/6"	DESCRIPTION	Material	REMARKS
65						SAND	
66	S-19	SS	24"	3 3 5 4	Red-brown clayey-SILT, tr. f sand (wet)	SILT	Drill to 70 ft.
67							
68							
69							
70							
71	S-20	SS	24"	3 3 5 4	Gray silty-CLAY (wet)	CLAY	
72							
73					End of Boring at 72'.		Boring Complete at 12:15 pm. Hole backfilled with cuttings.
74							
75							
76							
77							
78							
79							
80							
81							
82							
83							
84							
85							
86							

*Standard Penetration Test N-Value

LANGAN Engineering and Environmental Services, Inc.
River Drive Center 1, Elmwood Park, NJ 07407

Amendment #1

APPENDIX 'K '

LEAD BASED PAINT SURVEY

These are provided in a separate folder on the CD.

Amendment #1

APPENDIX 'L'

#1

SITE FACILITY SIGN DETAILS

See Attached

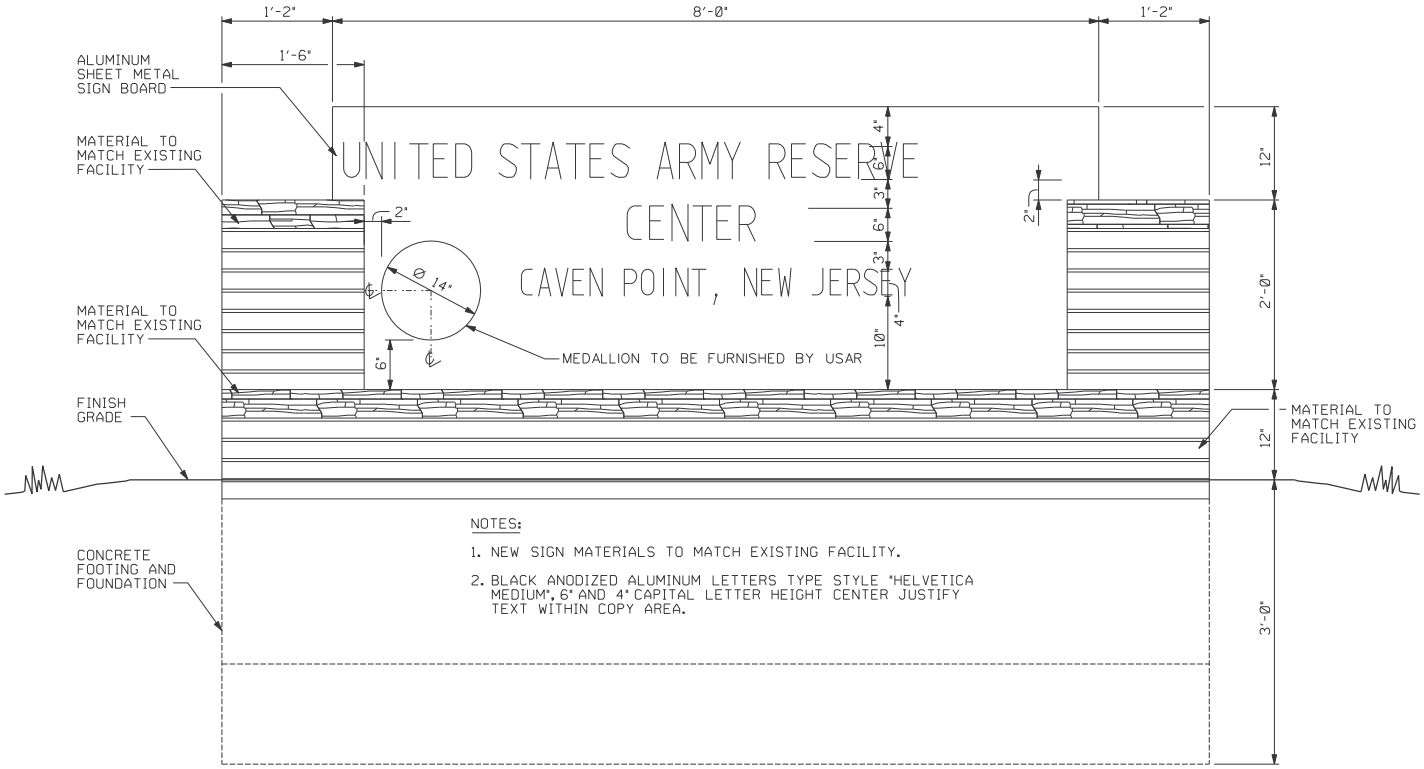

FRONT ELEVATION

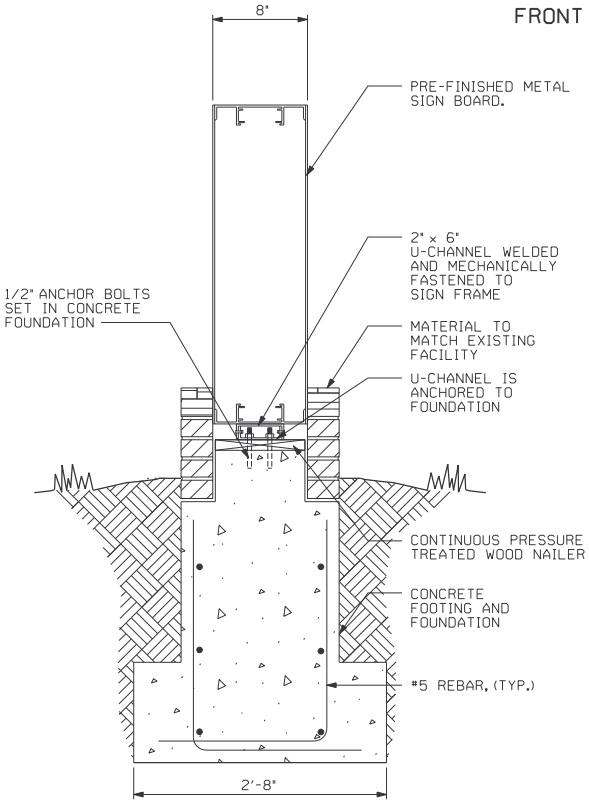

SECTION

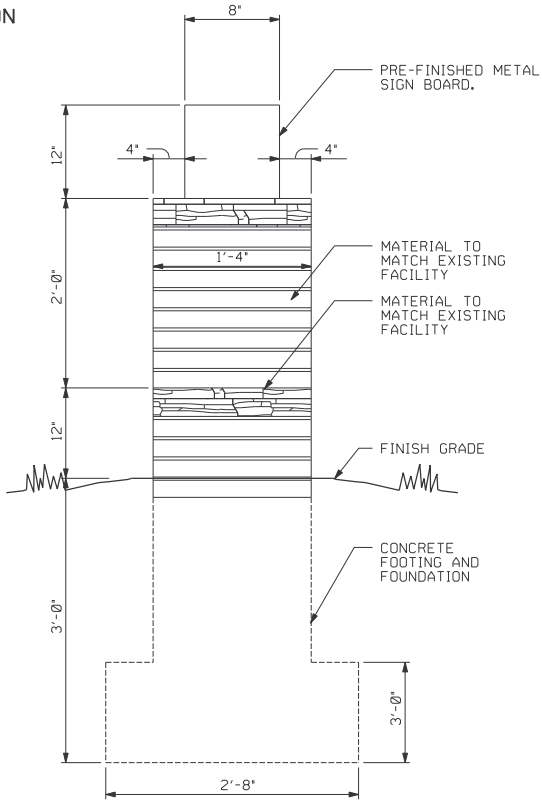

SIDE ELEVATION

FACILITIY SIGN

Amendment #1

VOLUME 2

Table of Contents

Section/Title		Page
Table of Contents		1
Division 1 - General Requirements		
01452	Testing for Mechanical and Electrical Systems	5
01552	Special Inspection For Seismic-Resisting Systems	7
01800	Equipment Operating, Maintenance, And Repair Manuals	8
Division 2 - Sitework		
02200	Demolition	12
02315	Excavation, Filling And Backfilling For Buildings	13
02316	Excavation, Trenching, and Backfilling For Utility Systems	14
02510	Water Distribution system	14
02531	Sanitary Sewers	17
02556	Gas Distribution System	19
02630	Storm-Drainage System	20
02722	Aggregate And/Or Graded-Crushed Aggregate Base Course	23
02741	Hot-Mix Asphalt (HMA) For Roads	23
02754	Concrete Pavement For Small Projects	25
02763	Pavement markers	26
02831	Chain Link Fencing And Gates	27
02900	Landscape Work	29
Division 3 - Concrete		
03100	Structural Concrete Formwork	30
03200	Concrete Reinforcement	31
03300	Cast-In-Place Concrete	33
Division 4 - Masonry		
04200	Unit Masonry System	47
Division 5 - Metals		
05120	Structural Steel	51
05210	Steel Joists	57
05300	Steel Decking	61
05400	Cold Formed Metal Framing	64
05500	Metal Fabrications	66
Division 6 - Wood And Plastics		
06100	Rough Carpentry	70
06600	Plastic Fabrications	73

Division 7 - Thermal And Moisture Protection

07110	Bituminous Dampproofing		74	
07130	Bituminous Waterproofing			74
07210	Building Insulation		75	
07220	Roof And Deck Insulation		77	
07311	Asphalt Shingles		78	
07551	Modified Bitumen Roofing	79		
07600	Flashing And Sheet Metal		82	
07840	Firestopping		84	
07900	Joint Sealers		86	

Division 8 - Doors And Windows

08110	Steel Doors and Frames		87	
08120	Aluminum Doors And Frames		90	
08210	Wood Doors		92	
08310	Access Doors And Frames			94
08330	Overhead Rolling Doors		94	
08331	Metal Coiling Counter Doors		97	
08520	Aluminum Windows		99	
08710	Door Hardware		102	
08810	Glass		105	
08840	Plastic Glazing		109	

Division 9 - Finishes

09250	Gypsum Board		110	
09310	Ceramic Tile		113	
09510	Acoustical Ceilings		116	
09650	Resilient Flooring	118		
09670	Fluid Applied Flooring		119	
09680	Carpeting		120	
09900	Paints And Coatings		123	

Division 10 - Specialties

10100	Visual Communications Specialties		134	
10106	Recessed Display Case		136	
10170	Plastic Toilet Partitions		136	
10200	Louvers And Vents		137	
10260	Wall And Corner Guards		138	
10350	Flagpoles		140	
10430	Exterior Signage		142	
10440	Interior Signage		143	
10500	Metal Lockers		146	
10520	Fire Extinguishers, Cabinets And Accessories		147	
10530	Miscellaneous Specialties		148	

	10550	Postal Specialties	149
	10605	Wire Mesh Partitions	150
#1	**10650**	**Operable Partitions (Edited)**	**150**
	10670	Storage Shelving	152
	10800	Toilet Accessories	153

Division 11 - Equipment

11132	Projection Screens	158
11400	Food Service Equipment	159
11400X	Appendix to 11400 Food Service Equipment	159
11450	Residential Equipment	176

Division 12 - Furnishings

12480	Rugs And Mats	177
12490	Window Treatment	177

Division 13 - Special Construction

13080	Sound, Vibration, And Seismic Control	178
13100	Lightning Protection	180
13110A	Cathodic Protection System	181
13700	Security Access and Surveillance	183
13850	Detection and Alarm	186
13920	Fire Pumps	190
13930	Sprinkler Systems, Fire Protection	191
13965	Wet Chemical Extinguishment System	195

Division 14 - Conveying Systems

14240	Hydraulic Elevators	195

Division 15 - Mechanical

15060	Hangers and Supports	209
15070	Mechanical Seismic Control	210
15072	Vibration Isolation	211
15075	Mechanical Identification	212
15080	Mechanical Insulation	214
15105	Piping	217
15110	Valves	218
15120	Piping Specialties	220
15130	Pumps	221
15150	Sanitary, Waste, Vent, and Storm Specialties	222
15410	Plumbing Fixtures	224
15440	Plumbing Pumps	225
15480	Domestic Water Heaters	226
15510	Heating Boilers and Accessories	227
15550	Direct-Fired Makeup Air Units	229
15575	Breeching and Stacks	230
15620	Packaged Air-Cooled Rotary-Screw Chillers	231

	15720	Air Handling Units	233
	15730	Split System Air Conditioning Units	235
	15740	Air-to-Air Heat Pumps	236
	15750	Dehumidifier Units	237
	15760	Terminal Heating Units	238
	15770	Radiant Floor Heating System	239
	15810	Metal Ductwork	240
	15820	Ductwork Accessories	241
	15830	Fans	242
	15835	Overhead Vehicle Tailpipe Exhaust System(s)	243
	15840	Air Terminal Units	244
	15850	Air Outlets and Inlets	245
	15855	Range Hood	246
	15860	Air Cleaning Devices	247
	15900	HVAC Instrumentation and Controls	247
	15950	Testing, Adjusting and Balancing	251

Division 16 - Electrical

	16050	Basic Electrical Materials and Methods	252
	16060	Grounding and Bonding	252
	16070	Hangers and Supports	253
	16075	Electrical Identification	254
	16120	Wires and Cables	254
	16130	Raceway and Boxes	255
	16140	Wiring Devices	257
	16210	Electrical Utility Services	258
	16220	Motors	258
	16240	Battery Equipment	259
	16410	Enclosed Switches and Circuit Breakers	260
	16420	Enclosed Controllers	261
	16440	Switchboards, Panelboards, and Control Centers	262
	16460	Low-Voltage Transformers	264
	16510	Interior Luminaires	266
#1	**16520**	**Exterior Luminaires (Edited)**	**268**
	16710	Communications Circuits	271
	16720	Intercommunication Equipment	273

DIVISION 1 - GENERAL REQUIREMENTS

SECTION 01452 - TESTING FOR MECHANICAL AND ELECTRICAL SYSTEMS

1. Applicability.

This section applies to all mechanical and electrical systems and all systems using electromagnetically driven equipment, pneumatic or electronic systems; high and low voltage electrical distribution systems (except branch panels) and to any system which incorporates this section into other parts of the specification by reference. For purposes of this section a "system" is an entity comprised of a series of closely related interdependent components and which is capable of independent performance of a useful function. System components shall include all software and programming as applicable for the system. Some typical examples include:

a. Independently functioning HVAC Systems.

b. Fire Alarm Systems.

c. Public Address Systems.

d. Sprinkler Systems including alarms.

e. Telephone Systems including line protectors, splices cables, switching equipment, outlets and instruments.

f. Intrusion Detection System.

g. High Voltage Equipment including cable, splices, switchgear, relays, circuit breakers, fuses, transformers, instrumentation, etc.

h. Low Voltage Switchboard including incoming and outgoing feeders, circuit protection and all accessories.

2. Test Plan.

a. Not later than sixty days after Notice to Proceed, in accordance with Section "Submittals" and other paragraphs of the technical provisions, the Contractor shall submit a list for approval consisting of all systems for which test plans are required. This list will be reviewed by the Government and any systems found to be missing will be required to be added by the Contractor, and appropriate test plans submitted. No work will be permitted on any of the above systems until this list is submitted.

b. The Contractor shall develop test plans and schedule operational testing for the systems in the approved list. The testing shall be in accordance with the requirements in the appropriate technical provisions and shall include as a minimum the requirements below. All testing required by applicable codes, standards, utility companies, manufacturers, suppliers, etc. shall be incorporated into the Contractor's test plans. Test plans shall list all equipment required to perform the tests, and any Government support required. It shall be in sufficient detail to permit a step-by step approach to the test and to demonstrate that the systems operate as intended by the contract documents. It shall describe as a minimum:

1. What system is being tested including a listing of all components to be tested.

2. What individual or organization will perform testing, who will certify the tests, and qualifications of test personnel.

3. A step by step narrative of the testing procedure to be used to demonstrate contract compliance including all governing standards, such as "sequence of controls", "ASTM Standard XXX"; or IEEE Standard XXX", etc.

4. What testing equipment will be utilized.

5. What operator interaction is required.

6. What results are to be expected.

7. Seasonal limitations, if any, including date(s) of proposed testing.

8. A complete schematic diagram (electrical, pneumatic) showing all components, and block diagram.

9. A checklist shall be developed to be used during the operational test.

c. Test plans shall be submitted for approval for all systems contained on the list submitted per para. 2a above. It is also desirable to submit all test plans as soon as possible so that the progress of the project and corresponding payments will proceed on schedule.

3. Testing Process.

a. Outlined below are a number of events relating to the status of the test plan and testing. The corresponding percentages indicate the maximum percentage of the value of the system which will be permitted to be installed after the successful completion of the corresponding event indicated, for all systems to which this section applies. Events must be completed sequentially. Any work performed in excess of the permitted percentages will be at the Contractor's own risk and will not be paid until the event corresponding to the percentage of system value permitted to be installed is successfully completed:

EVENT	MAX. % of SYSTEM VALUE PERMITTED TO BE INSTALLED
1. Contractor has submitted list of systems that require test plans to be approved, and system work is ongoing but no test plan submitted.	50
2. Test Plan Submitted	65
3. *Test Plan Approved	80
4. Successful completion of tests including submission of required documents, reports (i.e. balancing reports for all HVAC Systems), Operation and Maintenance Manuals spare parts, and spare parts data.	**100

* The Government will process the submittal in accordance with the time frames indicated in the specification section "Submittals". If the test plan is disapproved the Government has an additional 30 days to review the resubmittal from the date it receives the resubmittal.

**If a system involves both heating and cooling modes and one mode has been successfully tested this percentage shall be reduced to 90% until the testing is completed.

b. The Contractor may proceed with events as indicated in the above table for each system separately.

4. Operational tests including performance tests shall be conducted for an entire system, not component parts only. Tests may be conducted only after an entire system has been completely installed. Contractor shall provide a minimum of 14 days notice to the Contracting Officer of scheduled tests. This notice must include the Contractor's assurance that all installed work previously identified to the Contractor as being unacceptable along with all remaining work associated with the respective system will be complete and acceptable by the date scheduled for the operational test. Failure of the Contractor to have all contract work acceptably complete for this test will be cause for the Contracting Officer to bill the Contractor for the Government's additional inspection costs.

5. For each system the Contractor shall obtain the services of an experienced professional who shall certify that the operational test was conducted in accordance with the approved test plan and the results of this test meet all the contract requirements. These individuals must have a minimum of eight years experience in the testing of the particular system being tested and shall also meet qualifications (if any) set forth in other technical sections of the contract specifications.

6. For Design-Build projects, the Contractor's Designer of Record for the system shall participate in HVAC System Commissioning.

7. When considering the value of a system for payment purposes the following components shall be counted as part of a "system": All electro-magnetically driven equipment; pneumatic or electric control system; gauges, dampers, valves, actuators, controllers, pipes, test sensing elements, logic/processors, CPU's, ducts, insulation, wiring, conduit, switchgear, and all other mechanical or electrical components, devices or equipment which are essential to the proper function of the system such as pumps, motors, air- handling units, chillers, cooling towers, etc. Software programs and any refrigerants are also considered "parts" of a system.

8. The requirements contained in this section supplement other testing requirements contained in the contract documents. If a conflict exists between the requirements of this section and other parts of the contract documents, the requirements of this section shall take precedence.

SECTION 01552 - SPECIAL INSPECTION FOR SEISMIC-RESISTING SYSTEMS

Scope: 1. Special inspection and testing for seismic-resisting systems when required by paragraph 3.2 of FEMA 302 NEHRP RECOMMENDED PROVISIONS FOR SEISMIC REGULATION FOR NEW BUILDINGS AND OTHER STRUCTURES. This section applies only to buildings

References: 1. The publications referenced above (or below) establish minimum requirements for materials, systems and execution which may be specified in this Section.

ACI INTERNATIONAL (ACI)

ACI 318/318R	Building Code Requirements for Structural Concrete and Commentary
ACI 318M	Metric Building Code Requirements for Structural Concrete and Commentary
ACI 530/530.1	Building Code Requirements for Masonry Structures

AMERICAN INSTITUTE OF STEEL CONSTRUCTION (AISC)

AISC S341	Seismic Provisions for Structural Steel Buildings
AISC S342L	Load and Resistance Factor Design Specification for Structural Steel Buildings

AMERICAN SOCIETY FOR TESTING AND MATERIALS (ASTM)

ASTM A435/A435M	Straight-Beam Ultrasonic Examination of Steel Plates

ASTM A615/A615M Deformed and Plain Billet-Steel Bars for Concrete Reinforcement
ASTM A898/A898M Straight Beam Ultrasonic Examination of Rolled Steel Structural Shapes

U.S. FEDERAL EMERGENCY MANAGEMENT AGENCY (FEMA)

FEMA 302 NEHRP Recommended Provisions for Seismic Regulations for New Buildings and Other Structures

General:

1. Special Inspector: A Special Inspector shall be used to perform Special Inspections required by this section. The Special Inspector is a person employed by the Contractor and approved by the Government as being qualified by knowledge and experience to perform the Special Inspection for the category of work being constructed. Special Inspectors shall perform their duties independent from the construction quality control staff employed by the Contractor. More than one Special Inspector may be required to provide the varied knowledge and experience necessary to adequately inspect all of the categories of work requiring Special Inspection.

2. Quality Assurance Plan: The Contractor to prepare and submit quality assurance plan for Government approval. A quality assurance plan shall be developed containing the following:
   a. A list of all items that require quality assurance Special Inspection and testing, including the type, frequency, extent, and duration of the special inspection for each item on this list.
   b. A list of all items that require quality assurance testing, including the type and frequency of testing for each item on this list.
   c. The content, distribution, and frequency of special inspection reports.
   d. The content, distribution, and frequency of testing reports.
   e. The procedures, controls, and people used within the Contractor's organization to develop, sign, and distribute Special Inspection and Testing reports along with the position title and pertinent qualifications of all Contractor personnel involved.

   f. Contractor's statement of responsibility, which includes:
      1) Acknowledgment of awareness of the special requirements contained in the quality assurance plan.
      2) Acknowledgment that control will be exercised to obtain conformance with the construction documents.

3. Special Inspection: The Special Inspection for seismic-resisting system components shall be done as specified. Special Inspector personnel shall be in addition to the quality control inspections and inspectors required elsewhere in this section.
   a. Continuous Special Inspection: Continuous special inspection is the full time observation of the work by the Special Inspector present in the work area whenever work is being performed. Continuous special inspection shall be performed where specified for items as shown on the drawings and noted in this specification.

4. Periodic Special Inspection: Periodic special inspection is the intermittent observation of the work by a Special Inspector present in the work area while work is being performed. The intermittent observation periods shall be at times of significant work, shall be recurrent over the complete work period, and shall total at least 25 percent of the total work time. Periodic special inspection shall be performed where specified for items as shown on the drawings and noted in this specification.

SECTION 01800 - EQUIPMENT OPERATING, MAINTENANCE, AND REPAIR MANUALS

General Requirements:

1. The Contractor shall provide 6 complete copies of the Equipment Operating, Maintenance, and Repair Manuals. Separate manuals shall be provided for each utility system as defined hereinafter. Operations and Maintenance manuals shall be submitted and approved before field training or 90 days before substantial completion (whichever occurs earlier), and as specified in Special Contract Requirement 10. An amount of $10,000 shall be withheld until submittal and approval of O&M manuals is complete.

Definitions:

1. Equipment: A single piece of equipment operating alone or in conjunction with other equipment to accomplish a system function.

2. System: A combination of one or more pieces of equipment which function together to accomplish an intended purpose (i.e. HVAC system is composed of many individual pieces of equipment such as fans, motors, compressors, valves, sensors, relays, etc.)

3. Hard Cover Binders: The manuals shall be hard cover with posts, or 3-ring binders, so sheets may be substituted easily. The following identification shall be printed on the cover: the words "EQUIPMENT OPERATING, MAINTENANCE, AND REPAIR MANUALS," the project name, building number, and an indication of utility or systems covered, the name of the Contractor, and the Contract number. Manuals shall be approximately 8-1/2 by 11-inches with large sheets folded in and capable of being easily pulled out for reference. All manuals for the project must be similar in appearance, and be of professional quality.

4. Warning Page: A warning page shall be provided to warn of potential dangers (if they exist, such as high voltage, toxic chemicals, flammable liquids, explosive materials, carcinogens, high pressures, etc.). The warning page shall be placed inside the front cover and in front of the title page. Also, any necessary Material Safety Data Sheets (MDSD) shall be included here.

5. Title Page: The title page shall include the same information shown on the cover and show the name of the preparing firm and the date of publication.

6. Table of Contents: Each volume of the set of manuals for this project shall include a table of contents, for the entire set, broken down by volume.

Execution

1. General: Manuals shall be organized according to the following format, and will include information for each item of equipment (NOTE: This includes any equipment which may have been omitted from the items listed in Paragraph 3.2, System/Equipment Requirements.) A draft outline and table of contents shall be submitted for approval at 50% contract completion.

TABLE OF CONTENTS

PART I. Introduction.

(a) Equipment Description.
(b) Functional Description.
(c) Installation Description.

PART II. Operating Principles.

PART III. Safety.

PART IV. Preventive Maintenance

(a) Preventive Maintenance Checklist. Lubrication
(b) Charts and Diagrams.

PART V. Spare Parts Lists

(a) Troubleshooting Guide
(b) Adjustments
(c) Common Repairs and Parts Replacement

PART VI. Illustrations

2. Part I-Introduction: Part I shall provide an introduction, equipment or system description, functional description and theory of operation, and installation instructions for each piece of equipment. Complete instructions for uncrating, assembly, connection to the power source and pre-operating lubrication shall be included in the installation instructions as applicable. Illustrations, including wiring and cabling diagrams, are required as appropriate in this section. Halftone pictures of the equipment should be included in the introduction and equipment description, as well as system layout drawings with each item of equipment located and marked. Copies of previously submitted shop drawings shall not be used in these manuals.

3. Part II-Operating Principles: Part II shall provide complete instructions for operating the system, and each piece of equipment. Illustrations, halftone pictures, tables, charts, procedures, and diagrams are required when applicable. This will include step-by-step procedures for start-up and shutdown of both the system and each component piece of equipments, as well as adjustments required to obtain optimum equipment performance, and corrective actions for malfunctions. Performance sheets and graphs showing capacity data, efficiencies, electrical characteristics, pressure drops, and flow rates shall be shown here, also. Marked-up catalogs or catalog pages do not satisfy this requirements. Performance information shall be presented as concisely as possible and contain only data pertaining to equipment actually installed. Actual test data collected for Contractor performance shall be included here.

4. Part III-Safety: Part III shall contain the general and specific safety requirements peculiar to each item of equipment. Safety information should be repeated as notes cautions, and warnings in other sections where appropriate to operations described.

5. Part IV-Preventive Maintenance: Part IV shall contain a troubleshooting guide, including detailed instructions for all common adjustments and alignment procedures, including a detailed maintenance schedule. Also, include a diagnostic chart showing symptoms and solutions to problems. Include test hookups to determine the cause, special tools and test equipment, and methods for returning the equipment to operating conditions. Information may be in chart form or in tabular format with appropriate headings. Instructions shall be included for the removal, disassembly, repair, reassembly, and replacement of parts and assemblies where applicable and the task is not obvious.

6. Part V-Spare Parts List: Part V shall contain a tabulation of description data and parts location illustrations for all mechanical and electrical parts. The heading of the parts list shall clearly identify the supplier, purchase order number, and equipment. The unit price for each part shall be included, also. Parts shall be listed by major assemblies, and the listing shall be arranged in columnar form. Also, names and addresses of the nearest manufacturer's representatives will be included, as well as any special warranty information. A list of spare parts that are recommended to be kept in stock by the Government installation shall be provided.

7. Part VI-Illustrations: Part VI shall contain assembly drawings for the complete equipment or system and for all major components. Complete wiring diagrams and schematics shall be included. Other illustrations, such as exploded views, block diagrams, and cutaway drawings, are required as appropriate.

8. Framed Instructions: Framed instructions under glass or in laminated plastic, including wiring and control diagrams showing the complete layout of the entire system, including equipment, ductwork, piping valves, dampers, and control sequence, shall be posted at a location near the equipment described. Condensed operating instructions explaining preventive maintenance procedures methods of checking the system for normal safe operation, valve schedule and procedures for safely starting and stopping the system shall be prepared in type form, framed as specified above for the wiring and control diagrams and posted beside the diagrams. Proposed diagrams, instructions, and other sheets shall be submitted prior to posting. The framed instructions shall be posted before field training.

9. Field Training: Contractor shall conduct a training course for the operating staff for each particular system. The training period, a total of [...] hours of normal working time, shall start after the system is functionally completed. The field instructions shall cover all of the items contained in the Equipment Operating, Maintenance and Repair Manuals. The training will include both classroom and "hands-on" training. The Contractor shall submit a lesson plan outlining the information to be discussed during training periods. This lesson plan will be submitted 90 days before contract completion and approved before the field training occurs. [Training shall be videotaped on one-half inch VHS cassettes and shall be furnished to the Government within ten (10) days following training.] Training shall be documented by the Contractor and a list of attendees shall be furnished to the Government.

System/Equipment Requirements:

1. Facility Heating System: Information shall be provided on the following equipment: boilers, water treatment, chemical feed pumps and tanks, converters, heat exchangers, pumps, unit heaters, fin-tube radiation, air handling units (both heating only and heating and cooling), and valves (associated with heating systems).

2. Air-Conditioning Systems: Provide information in chillers, packaged air-conditioning equipment, towers, water treatment, chemical feed pumps and tanks, air-cooled condensers, pumps, compressors, air handling units, and valves (associated with air-conditioning systems).

3. Temperature Control and HVAC Distribution Systems: Provide all information described for the following equipment: valves, fans, air handling units, pumps, boilers, converters and heat exchangers, chillers, water cooled condensers, cooling towers, and fin-tube radiation, control air compressors, control components (sensors, controllers, adapters and actuators), and flow measuring equipment.

4. Central Heating Plants: Provide the information described for the following equipment: boilers, converters, heat exchangers, pumps, fans, steam traps, pollution control equipment, chemical feed equipment, control systems, fuel handling equipment, de-aerators, tanks (flash, expansion, return waters, etc.), water softeners, and valves.

5. Heating Distribution Systems: Provide the information described for the following equipment: valves, fans, pumps, converters and heat exchangers, steam traps, tanks (expansion, flash, etc.), and piping systems.

6. Exterior Electrical Systems: Information shall be provided on the following equipment: power transformers, relays, re-closers, breakers, and capacitor bank controls.

7. Interior Electrical Systems: Information shall be provided on the following equipment: relays, motor control centers, switchgear, solid state circuit breakers, motor controller, EPS lighting systems, wiring diagrams and troubleshooting flow chart on control systems, and special grounding systems.

8. Energy Monitoring and Control Systems: The maintenance manual shall include descriptions of maintenance for all equipment, including inspection, periodic preventative maintenance, fault diagnosis, and repair or replacement of defective components.

9. Domestic Water Systems: The identified information shall be provided on the following equipment: tanks, unit process equipment, pumps, motors, control and monitoring instrumentation, laboratory test equipment, chemical feeders, valves, switching gear, and automatic controls.

10. Wastewater Treatment Systems: The identified information shall be provided on the following equipment: tanks, unit process equipment, pumps, motors, control and monitoring instrumentations, laboratory test equipment chemical feeders, valves, scrapers, skimmers, comminutors, blowers, switching gear, and automatic controls.

11. Fire Protection Systems: Information shall be provided on the following equipment: alarm valves, manual valves, regulators, foam and gas storage tanks, piping materials, sprinkler heads, nozzles, pumps, and pump drivers.

12. Fire Detection Systems: The maintenance manual shall include description of maintenance for all equipment, including inspection, periodic preventive maintenance, fault diagnosis, and repair or replacement of defective components.

13. Plumbing Systems: Information shall be provided on the following equipment: water heaters, valves, pressure regulators backflow preventors, piping materials, and plumbing fixtures.

14. Liquid Fuels Systems: Information shall be provided on the following equipment: tanks, automatic valves manual valves, filter separators, pumps, mechanical loading arms, nozzles, meters, electronic controls, electrical switch gear, and fluidic controls.

15. Cathodic Protection Systems: Information shall be provided on the following material and equipment: rectifiers, meters, anodes, anode backfill, anode lead wire, insulation material and wire size, automatic controls (if any), rheostats, switches, fuses and circuit breakers, type and size of rectifying elements, type of oil in oil-immersed rectifiers, and rating of shunts.

16. Generator Installations: Information shall be provided on the following equipment: generator sets, automatic transfer panels, governors, exciters, regulators starting systems, switchgear, and protective devices.

17. Miscellaneous Systems: Information shall be provided on the following: communication and ADP systems, security and intrusion alarm, elevators, material handling, active solar, photovoltaic, nurse call, paging, intercom, closed circuit TV, irrigation, sound and material delivery systems, kitchen, refrigeration, disposal, ice making equipment, and other similar type special systems not otherwise specified.

18. Laboratory, Environmental and Pollution Control Systems: Information shall be provided on the following equipment: wet scrubbers, quench chambers, scrub tanks, liquid oil separators, and fume hoods.

19. Pricing Of Contractor-Furnished And Installed Property And Government-Furnished Contractor-Installed Property: The Contractor shall promptly furnish and shall cause any sub-contractor or supplier to furnish, in like manner, unit prices and descriptive data required by the Government for Property Record purposes of fixtures and equipment furnished and/or installed by the Contractor or sub-contractor, except prices do not need to be provided for Government-Furnished Property. This information shall be listed in the RMS CQC Module furnished by the Government. See example forms at the end of the Special Contractor Requirements.

DIVISION 2 - SITEWORK

SECTION 02200 - DEMOLITION

Scope:

1. Demolition, salvage of identified items and materials, and removal of resulting rubbish and debris
2. Disposal of non-salvageable items in accordance with Federal, local and State regulations.
3. Recycling of re-usable materials.
4. Delivery of salvaged items we furnished by the Government-to-Government facility.

Products:

1. Not applicable.

Execution:

1. Perform work in accordance with EM 385-1-1, Section 23, Demolition, and other applicable sections.

SECTION 02315 – EXCAVATION, FILLING AND BACK FILLING FOR BUILDINGS

Scope:

1. Performing excavation, dewatering, filling, compacting and grading operations both inside and outside building footprint limits as required for below grade improvements and to achieve the contours and elevations indicated on the plans.
2. Provide sub-base materials, drainage fill and common fill materials for building, slabs, pavements and improvements and preparation for foundations.
3. Provide suitable fill and soil materials from off-site sources if on-site quantities are not sufficient dispose of excess fill off-site.
4. Provide rock excavation without blasting unless blasting is specifically authorized.
5. Provide trenching and back fill for structural building components and utilities within the building envelope.
6. Provide sub-drainage system where recommended by the Geotechnical Engineer, design shall be as recommended by the Geotechnical Engineer.

References:

1. The publications referenced above (or below) establish minimum requirements for materials, systems and execution which may be specified in this Section.

AMERICAN SOCIETY FOR TESTING AND MATERIALS (ASTM)

ASTM D 1556 Density and Unit Weight of Soil in Place by the Sand-cone Method

ASTM D 1557	Laboratory Compaction Characteristics of Soil Using Modified Effort (56,000 ft – lbf/cu. Ft. (2,700 kN-m/cu. M.))
ASTM D 2216	Laboratory Determination of Water (Moisture) Content of Soil and Rock
ASTM D 2487	Classification of Soils for Engineering Purposes (Unified Soil Classification System)
ASTM D 2922	Density of Soil and Soil-Aggregate in Place by Nuclear Methods (Shallow Depth)
ASTM D 3017	Water Content of Soil and Rock in Place by Nuclear Methods (Shallow Depth)
ASTM D 4318	Liquid Limit, Plastic Limit, and Plasticity Index of Soils

Submittals:
1. Test reports, field density, gradation, Proctor Density.
2. Sub drainage system design.

Products:
1. Satisfactory materials or comprised materials classified as ASTMD 2487 such as GW, GP, GM, GP – GM, GW – GM, GC, GP – GC, GM – GC, SW and SP. Black GM materials are not satisfactory.
2. Capillary water barrier consisting of clean crushed non-porous rock, crushed gravel or un-crushed gravel with a maximum particle size of 37.5 millimeters and with no more than 2% by weight passing the 4.5 millimeter size.

Execution:
1. Backfill under structure to 95% to 98% modified proctor as required for specific applications.
2. Compact capillary water barrier under concrete floor slabs minimal 2 passes of a hand operated plate type vibratory compactor.

SECTION 02316 – EXCAVATION, TRENCHING, AND BACK FILLING FOR UTILITY SYSTEMS

Scope:
1. Excavate, shore and brace sidewalls in excavations for utility systems.
2. Dewatering
3. Provide select granular material for pipe bedding and pipe zone soil materials for utilities.
4. Backfill utility trenches.

References:
1. The publications referenced above (or below) establish minimum requirements for materials, systems and execution which may be specified in this Section.

AMERICAN SOCIETY FOR TESTING AND MATERIALS (ASTM)

ASTM D 1556	Density and Unit Weight of Soil in Place by the Sand-cone Method
ASTM D 1557	Laboratory Compaction Characteristics of Soil Using Modified Effort (56,000 ft – lbf/cu. Ft. (2,700 kN-m/cu. M.))
ASTM D 2487	Classification of Soils for Engineering Purposes (Unified Soil Classification System)
ASTM D 2922	Density of Soil and Soil-Aggregate in Place by Nuclear Methods (Shallow Depth)
ASTM D 3017	Water Content of Soil and Rock in Place by Nuclear Methods (Shallow Depth)

DEPARTMENT OF TRANSPORTATION (DOT)

Department of Transportation Specification for state in which the project is located.

Submittals: 1. Test reports, field density, gradation, Proctor Density.

Products: 1. Satisfactory materials shall comprise materials classified by ASTMD2487 as GW, GP, GM, GP – GM, GW – GM, GC, GP – GC, GM – GC, SW, SP, SW – SM, SW – SC, SP – SM. Black GM materials are not satisfactory. Plastic marking tape for utility systems according to color and utility type.

Execution 1. Construction to lines and grades for utilities as noted on the plans.

SECTION 02510 – WATER DISTRIBUTION SYSTEM

Scope: 1. Provide water system piping and appurtenances for potable water supply and fire protection on site and outside the building footprint. Conduct hydrant flow test for in place system.

2. Provide testing for leakage, pressure and water quality parameters.

3. Provide cathodic protection at buried metal pipe and fittings.

References: 1. The publications referenced above (or below) establish minimum requirements for materials, systems and execution which may be specified in this Section.

AMERICAN SOCIETY FOR TESTING AND MATERIALS (ASTM)

ASTM A 36/A 36M	Carbon Structural Steel
ASTM A 53	Pipe, Steel, Black and Hot-Dipped, Zinc-Coated, Welded and Seamless
ASTM B 88	Seamless Copper Water Tube
ASTM B 88M	Seamless Copper Water Tube (Metric)
ASTM C 76	Reinforced Concrete Culverts, Storm Drain, and Sewer Pipe
ASTM C 76M	Reinforced Concrete Culverts, Storm Drain, and Sewer Pipe (Metric)
ASTM D 1599	Resistance to Short-Time Hydraulic Failure Pressure of Plastic Pipe, Tubing, and Fittings
ASTM D 1784	Rigid Poly (Vinyl Chloride) (PVC) Compounds and Chlorinated Poly (Vinyl Chloride) (CPVC) Compounds
ASTM D 1785	Poly (Vinyl Chloride) (PVC) Plastic Pipe, Schedules 40, 80, and 120
ASTM D 2441	Poly (Vinyl Chloride) (PVC) Pressure-Rated Pipe (SDR Series)
ASTM D 2464	Threaded Poly (Vinyl Chloride) (PVC) Plastic Pipe Fittings, Schedule 80
ASTM D 2466	Poly (Vinyl Chloride) (PVC) Plastic Pipe Fittings, Schedule 40
ASTM D 2467	Poly (Vinyl Chloride) (PVC) Plastic Pipe Fittings, Schedule 80
ASTM D 2564	Solvent Cements for Poly (Vinyl Chloride) (PVC) Plastic Piping Systems
ASTM D 2657	Heat Fusion Joining Polyolefin Pipe and Fittings
ASTM D 2774	Underground Installation of Thermoplastic Pressure Piping
ASTM D 2855	Making Solvent-Cemented Joints with Poly (Vinyl Chloride) (PVC)
ASTM D 3139	Joints for Plastic Pressure Pipes Using Flexible Elastomeric Seals
ASTM F 477	Elastomeric Seals (Gaskets) for Joining Plastic Pipe

ASME INTERNATIONAL (ASME)

ASME B1.20.1	Pipe Threads, General Purpose (Inch)
ASME B16.1	Cast Iron Pipe Flanges and Flanged Fittings
ASME B16.3	Malleable Iron Threaded Fittings
ASME B16.26	Cast Copper Alloy Fittings for Flared Copper Tubes

ASME B36.10M	Welded and Seamless Wrought Steel Pine

AMERICAN WATER WORKS ASSOCIATION (AWWA)

AWWA B300	Hypochlorites
AWWA B301	Liquid Chlorine
AWWA C104	Cement-Mortar Lining for Ductile-Iron Pipe and Fittings for Water
AWWA C105	Polyethylene Encasement for Ductile-Iron Pipe Systems
AWWA C110	Ductile-Iron and Gray-Iron Fittings, 3 In. Through 48 In. (75 mm through 1200 mm), for Water and Other Liquids
AWWA C111	Rubber-Gasket Joints for Ductile-Iron Pressure Pipe and Fittings
AWWA C115	Flanged Ductile-Iron Pipe with Ductile-Iron or Gray-Iron Threaded Flanges
AWWA-C151	Ductile-Iron Pipe, Centrifugally Cast, for Water or Other Liquids
AWWA-C153	Ductile-Iron Compact Fittings, 3 In. Through 24 In. (76 mm through 610 mm) and 54 In. through 64 In. (1,400 mm through 1,600 mm) for Water Service
AWWA C200	Steel Water Pipe – 6 In. (150 mm) and Larger
AWWA C203	Coal-Tar Protective Coatings and Linings for Steel Water Pipelines – Enamel and Tape – Hot Applied
AWWA C205	Cement-Mortar Protective Lining and Coating for Steel Water Pipe – 4 In. (100 mm) and larger – Shop Applied
AWWA C207	Steel Pipe Flanges for Waterworks Service – Sizes 4 In. through 144 In. (100 mm through 3,600 mm)
AWWA C208	Dimensions for Fabricated Steel Water Pipe Fittings
AWWA C500	Metal-Sealed Gate Valves for Water Supply Service
AWWA C502	Dry-Barrel Fire Hydrants
AWWA C503	Wet-Barrel Fire Hydrants
AWWA C504	Rubber-Seated Butterfly Valves
AWWA C509	Resilient-Seated Gate Valves for Water Supply Service
AWWA C600	Installation of Ductile-Iron Water Mains and Their Appurtenances
AWWA C606	Grooved and Shouldered Joints
AWWA C651	Disinfecting Water Mains
AWWA C700	Cold-Water Meters – Displacement Type, Bronze Main Case
AWWA C701	Cold-Water Meters- Turbine Type, for Customer Service
AWWA C702	Cold-Water meters – Compound Type
AWWA C703	Cold-Water meters – Fire Service Type
AWWA C704	Propeller-Type Meters Waterworks Applications
AWWA C706	Direct-Reading, Remote-Registration Systems for Cold-Water Meters
AWWA C707	Encoder-Type Remote-Registration Systems for Cold-Water Meters
AWWA C800	Underground Service Line Valves and Fittings
AWWA C900	Polyvinyl Chloride (PVC) Pressure Pipe, 4 In. through 12. In., for Water Distribution
AWWA C901	Polyethylene (PE) Pressure Pipe and Tubing, 1/2 In. through 3 In., for Water Service
AWWA C905	Polyvinyl Chloride (PVC) Water Transmission Pipe, Nominal Diameters 14 In. through 36 In.
AWWA M23	Manual: PVC Pipe – Design and Installation

DUCTILE IRON PIPE RESEARCH ASSOCIATION (DIPRA)

DIPRA-Restraint Design	Thrust Restraint Design for Ductile Iron Pipe

MANUFACTURERS STANDARDIZATION SOCIETY OF THE VALVE AND FITTINGS INDUSTRY (MSS)

NFPA 24	Installation of Private Fire Service Mains and Their Appurtenances
NFPA 49	Hazardous Chemicals Data
NFPA 325-1	Fire Hazard Properties of Flammable Liquids, Gases, and Volatile Solids
NFPA 704	Identification of the Fire Hazards of Materials for Emergency Response
NFPA 1961	Fire Hose

NSF INTERNATIONAL (NSF)

NSF 14	Plastics Piping Components and Related Materials
NSF 61	Drinking Water System Components – Health Effects (Sections 1-9)

THE SOCIETY FOR PROTECTIVE COATINGS (SSPC)

SSPC Paint 21	White or Colored Silicone Alkyd Paint
SSPC Paint 25	Red Iron Oxide, Zinc Oxide, Raw Linseed Oil and Alkyd Primer (Without Lead and Chromate Pigments)

Submittals:
1. Manufacturing recommendations for each material and procedure used.
2. Waste water disposal method.
3. Test reports – Pressure test
4. Bacteriological test

Products:
1. Pipe: Ductile iron pipe or PVC.
2. Water control valves of the gate valve, check valve or butterfly valve type, 50 psi minimum working pressure unless system requirements are greater
3. Hydrant type compatible with municipal or public work fire protection systems
4. Water meter as furnished by local utility or compatible with local utility or public works standards.
5. Service pipe: Copper or PVC.
6. Post indicator valve according to requirements of NFPA 24.

Execution:
1. Conduct pressure and leakage tests.
2. Provide bacteriological disinfection with water sample analyses.

SECTION 02531 - SANITARY SEWERS

Scope:
1. Provide an operating underground sanitary sewer collection system outside the building footprint. system components shall include sewer pipe, manholes, frames, covers and appurtenances.
2. Provide cathodic protection for buried metal pipe and appurtenances.

References:
1. The publications referenced above (or below) establish minimum requirements for materials, systems and execution which may be specified in this Section.

AMERICAN RAILWAY ENGINEERING & MAINTENANCE-OF-WAY ASSOCIATION (AREMA)

AREMA Manual	Manual for Railway Engineering (4 Vol.)

AMERICAN SOCIETY FOR TESTING AND MATERIALS (ASTM)

ASTM A 74	Cast Iron Soil Pipe and Fittings
ASTM A 123/A 123M	Zinc (Hot-Dip Galvanized) Coatings on Iron and Steel Products
ASTM C 14	Concrete Sewer, Storm Drain, and Culvert Pipe
ASTM C 14M	Concrete Sewer, Storm Drain, and Culvert Pipe (Metric)
ASTM C 76	Reinforced Concrete Culvert, Storm Drain, and Sewer Pipe
ASTM C 76M	Reinforced Concrete Culvert, Storm Drain, and Sewer Pipe (Metric)
ASTM C 425	Compression Joints for Vitrified Clay Pipe and Fittings
ASTM C 443	Joints for Circular Concrete Sewer and Culvert Pipe, Using Rubber Gaskets
ASTM C 443M	Joints for Circular Concrete Sewer and Culvert Pipe, Using Rubber Gaskets (Metric)
ASTM C 478	Precast Reinforced Concrete Manhole Sections
ASTM C 478M	Precast Reinforced Concrete Manhole Sections (Metric)
ASTM C 564	Rubber Gaskets for Cast Iron Soil Pipe and Fittings
ASTM C 700	Vitrified Clay Pipe, Extra Strength, Standard Strength, and Perforated
ASTM C 828	Low-Pressure Air Test of Vitrified Clay Pipe Lines
ASTM C 924	Concrete Pipe Sewer Lines by Low-Pressure Air Test Method
ASTM C 924M	Concrete Pipe Sewer Lines by Low Pressure Air Test Method (Metric)
ASTM D 412	Vulcanized Rubber and Thermoplastic Rubbers and Thermoplastic Elastomers – Tension
ASTM D 624	Tear Strength of Conventional Vulcanized Rubber and Thermoplastic Elastomers
ASTM D 1784	Rigid Poly (Vinyl Chloride) (PVC) Compounds and Chlorinated Poly (Vinyl Chloride) (CPVC) Compounds
ASTM D 3034	Type-PSM (poly (Vinyl Chloride) (PVC) Sewer Pipe and Fittings
ASTM D 3212	Joints for Drain and Sewer Plastic Pipes Using Flexible Elastomeric Seals
ASTM F 477	Elastomeric Seals (Gaskets) for Joining Plastic Pipe
ASME B1.20.1	Pipe Threads, General Purpose (Inch)
ASME B16.1	Cast Iron Pipe Flanges and Flanged Fittings
ASME B16.3	Malleable Iron Threaded Fittings
ASME B16.26	Cast Copper Alloy Fittings for Flared Copper Tubes
ASME B36.10M	Welded and Seamless Wrought Steel Pine

AMERICAN WATER WORKS ASSOCIATION (AWWA)

AWWA B300	Hypochlorites
AWWA B301	Liquid Chlorine
AWWA C104	Cement-Mortar Lining for Ductile-Iron Pipe and Fittings for Water
AWWA C105	Polyethylene Encasement for Ductile-Iron Pipe Systems
AWWA C110	Ductile-Iron and Gray-Iron Fittings, 3 In. Through 48 In. (75 mm through 1200 mm), for Water and Other Liquids
AWWA C111	Rubber-Gasket Joints for Ductile-Iron Pressure Pipe and Fittings
AWWA C115	Flanged Ductile-Iron Pipe with Ductile-Iron or Gray-Iron Threaded Flanges
AWWA-C151	Ductile-Iron Pipe, Centrifugally Cast, for Water or Other Liquids
AWWA-C153	Ductile-Iron Compact Fittings, 3 In. Through 24 In. (76 mm through 610 mm) and 54 In. through 64 In. (1,400 mm through 1,600 mm) for Water Service

AWWA C200	Steel Water Pipe – 6 In. (150 mm) and Larger
AWWA C203	Coal-Tar Protective Coatings and Linings for Steel Water Pipelines – Enamel and Tape – Hot Applied
AWWA C205	Cement-Mortar Protective Lining and Coating for Steel Water Pipe – 4 In. (100 mm) and larger – Shop Applied
AWWA C207	Steel Pipe Flanges for Waterworks Service – Sizes 4 In. through 144 In. (100 mm through 3,600 mm)
AWWA C208	Dimensions for Fabricated Steel Water Pipe Fittings
AWWA C500	Metal-Sealed Gate Valves for Water Supply Service
AWWA C502	Dry-Barrel Fire Hydrants
AWWA C503	Wet-Barrel Fire Hydrants
AWWA C504	Rubber-Seated Butterfly Valves
AWWA C509	Resilient-Seated Gate Valves for Water Supply Service
AWWA C600	Installation of Ductile-Iron Water Mains and Their Appurtenances
AWWA C606	Grooved and Shouldered Joints
AWWA C651	Disinfecting Water Mains
AWWA C700	Cold-Water Meters – Displacement Type, Bronze Main Case
AWWA C701	Cold-Water Meters- Turbine Type, for Customer Service
AWWA C702	Cold-Water meters – Compound Type
AWWA C703	Cold-Water meters – Fire Service Type
AWWA C704	Propeller-Type Meters Waterworks Applications
AWWA C706	Direct-Reading, Remote-Registration Systems for Cold-Water Meters
AWWA C707	Encoder-Type Remote-Registration Systems for Cold-Water Meters
AWWA C800	Underground Service Line Valves and Fittings
AWWA C900	Polyvinyl Chloride (PVC) Pressure Pipe, 4 In. through 12. In., for Water Distribution
AWWA C901	Polyethylene (PE) Pressure Pipe and Tubing, 1/2 In. through 3 In., for Water Service
AWWA C905	Polyvinyl Chloride (PVC) Water Transmission Pipe, Nominal Diameters 14 In. through 36 In.
AWWA M23	Manual: PVC Pipe – Design and Installation

DUCTILE IRON PIPE RESEARCH ASSOCIATION (DIPRA)

DIPRA-Restraint Design	Thrust Restraint Design for Ductile Iron Pipe

MANUFACTURERS STANDARDIZATION SOCIETY OF THE VALVE AND FITTINGS INDUSTRY (MSS)

NFPA 24	Installation of Private Fire Service Mains and Their Appurtenances
NFPA 49	Hazardous Chemicals Data
NFPA 325-1	Fire Hazard Properties of Flammable Liquids, Gases, and Volatile Solids
NFPA 704	Identification of the Fire Hazards of Materials for Emergency Response
NFPA 1961	Fire Hose

NSF INTERNATIONAL (NSF)

NSF 14	Plastics Piping Components and Related Materials
NSF 61	Drinking Water System Components – Health Effects (Sections 1-9)

THE SOCIETY FOR PROTECTIVE COATINGS (SSPC)

SSPC Paint 21	White or Colored Silicone Alkyd Paint
SSPC Paint 25	Red Iron Oxide, Zinc Oxide, Raw Linseed Oil and Alkyd Primer (Without Lead and Chromate Pigments)

Submittals:
1. Cement type for manholes and pipe.
2. Oil resistant joints

Products:
1. Pipe: PVC, cement line ductile iron pipe (DIP), vitrified clay pipe only where clay PVC and DIP are not suitable.
2. Manholes: Pre-cast reinforced concrete according to ASTM C478.
3. Manhole frames, covers, grates: gray cast iron with utility type information cast in the cover.
4. Manhole steps – Polypropylene encased steel design and for personnel access and safety.

Execution:
1. Provide deflection and leakage testing.

SECTION 02556 – GAS DISTRIBUTION SYSTEM

Scope:
1. Provide piping and controls for a gas distribution system on site and outside of the building footprint.

References:
1. The publications referenced above (or below) establish minimum requirements for materials, systems and execution which may be specified in this Section.

AMERICAN GAS ASSOCIATION (AGA)

AGA Manual	A.G.A. Plastic Pipe Manual for Gas Service

AMERICAN NATIONAL STANDARDS INSTITUE (ANSI)

ANSI B109.2	Diaphragm Type Gas Displacement Meters (500 Cubic Feet per Hour Capacity and Over)

AMERICAN PETROLEUM INSTITUTE (API)

API Spec 5L	Line Pipe
API Spec 6D	Pipeline Valves (Gate, Plug, Ball, and Check Valves)

AMERICAN SOCIETY FOR TESTING AND MATERIALS (ASTM)

ASTM A 53	Pipe, Steel, Black and Hop-Dipped, Zinc-Coated, Welded and Seamless
ASTM A 181/A 181/M	(1995b) Carbon Steel Forgings, for General-Purpose Piping

Submittals:
1. Equipment list.
2. Spare parts list.
3. Schedule for connection to the in place lines.
4. Qualification welder, jointers, inspectors, training.

5. Gas tie-in procedures.

6. O&M data.

Products: 1. Conduit: polyethylene pipe or steel pipe with protective coating and cathodic protection.

2. Valves: according to and compatible with piping system type.

3. Meters: provide meter compatible with and meeting standards of the local gas supplying utility.

SECTION 02630 – STORM – DRAINAGE SYSTEM

Scope: 1. Provide an operating underground storm sewer collection system outside of the building footprint. The storm sewer system shall include pipe, manholes, catch basins with frames, covers and grates.

2. Special water level control manholes and associated gates and/or valves and weirs.

References: 1. The publications referenced above (or below) establish minimum requirements for materials, systems and execution which may be specified in this Section.

ACI INTERNATIONAL (ACI)

ACT 346/346R	Standard Specification for Cast-in-Place Nonreinforced Concrete Pipe and Recommendations

AMERCIAN ASSOCIATION OF STATE HIGHWAY AND TRANSPORTATION OFFICIALS (AASHTO)

ASHTO HB-16	Standard Specifications for Highway Bridges
AASHTO M 167	Corrugated Steel Structural Plate, Zinc Coated, for Field Bolted Pipe
AASHTO M 190	Bituminous Coated Corrugated Metal Culvert Pipe and Pipe Arches
AASHTO M 198	Joints for Circular Concrete Sewer and Culvert Pipe Using flexible Watertight Gaskets.
AASHTO M 219	Aluminum Alloy Structural Plate for Field Bolted Conduits
AASHTO M 243	Field Applied Coating of Corrugated Metal Structural Plate or Pipe, Pipe-Arches, and Arches
AASHTO M 294	Corrugated Polyethylene Pipe, 300-to 1200- mm Diameter
AASHTO MP 7	Corrugated Polyethylene Pipe, 1350 and 1500 mm Diameter

AMERICAN RAILWAY ENGINEERING & MAINTENANCE-OF-WAY ASSOCIATION (ARMEA)

AREMA Manual	Manual for Railway Engineering (4 Vol.)

AMERICAN SOCIETY FOR TESTING AND MATERIALS (ASTM)

ASTM A 48	Gray Iron Castings
ASTM A 48M	Gray Iron Castings (Metric)
ASTM A 123/A 123M	Zinc (Hot-Dip Galvanized) Coatings on Iron and Steel Products
ASTM A 536	Ductile Iron Castings
ASTM A 716	Ductile Iron Culvert Pipe

ASTM A 742/A 742M	Steel Sheet, Metallic Coated and Polymer Precoated for Corrugated Steel Pipe
ASTM A 760/A 760M	Corrugated Steel Pipe, Metallic-Coated for Sewers and Drains
ASTM A 762/A 763M	Corrugated Steel Pipe, Polymer Precoated for sewers and Drains
ASTM A 798/A 798M	Installing Factory-Made Corrugated Steel Pipe for Sewers and Other Applications
ASTM A 870	Installing Corrugated Steel Structural Plate Pipe for Sewers and Other Applications
ASTM A 849	Post-Applied Coatings, Pavings, and Linings for Corrugated Steel Sewer and Drainage Pipe
ASTM A 929/A 929M	Steel Sheet, Metallic-Coated by the Hot-Dip Process for Corrugated Steel Pipe
ASTM B 26/B 26M	Aluminum-Alloy Sand Castings
ASTM B 745/B 745M	Corrugated Aluminum Pipe for Sewers and Drains
ASTM C 12	Installing Vitrified Clay Pipe Lines
ASTM C 14	Concrete Sewer, Storm Drain, and Culvert Pipe
ASTM C 14M	Concrete Sewer, Storm Drain, and Culvert Pipe (Metric)
ASTM C 32	Sewer and Manhole Brick (Made from Clay or shale)
ASTM C 55	Concrete Brick
ASTM C 62	Building Brick (Solid Masonry Units Made from Clay or shale)
ASTM C 76	Reinforced Concrete Culvert, Storm Drain, and Sewer Pipe
ASTM C 76M	Reinforced Concrete Culvert, Storm Drain, and Sewer Pipe (Metric)
ASTM C 139	Concrete Masonry Units for Construction of Catch Basins and Manholes
ASTM C 425	Compression Joints for Vitrified Clay Pipe and Fittings
ASTM C 443	Joints for Circular Concrete Sewer and Culvert Pipe, Using Rubber Gaskets
ASTM C 443M	Joints for Circular Concrete Sewer and Culvert Pipe, Using Rubber Gaskets (Metric)
ASTM C 478	Precast Reinforced Concrete Manhole Sections
ASTM C 478M	Precast Reinforced Concrete Manhold Sections (Metric)
ASTM C 506	Reinforced Concrete Arch Culvert, Storm Drain, and Sewer Pipe
ASTM C 506M	Reinforced Concrete Arch Culvert, Storm Drain, and Sewer Pipe (Metric)
ASTM C 507	Reinforced Concrete Elliptical Culvert, Storm Drain and Sewer Pipe
ASTM C 507M	Reinforced Concrete Elliptical Culvert, Storm Drain, and Sewer Pipe (Metric)
ASTM C 850	Precast Reinforced Concrete Box Sections for Culverts, Storm Drains, and Sewers with Less Than 2 Ft. of Cover Subjected to Highway Loadings
ASTM C 877	External Sealing Bands for Noncircular Concrete Sewer, Storm Drain, and Culvert Pipe
ASTM C 877M	External Sealing Bands for Noncircular Concrete Sewer, Storm Drain, and Culvert Pipe (Metric)
ASTM C 923	Resilient Connectors Between Reinforced Concrete Manhole Structures, Pipes and Materials
ASTM C 924	Concrete Pipe Sewer Lines by Low Pressure Air Test Method
ASTM C 924M	Concrete Pipe Sewer Lines by Low Pressure Air Test Method (Metric)
ASTM C 1103	Joint Acceptance Testing of Installed Precast Concrete Pipe Sewer Lines
ASTM C 1103M	Joint Acceptance Testing of Installed Precast Concrete Pipe Sewer Lines (Metric)
ASTM D 1056	Flexible Cellular Materials – Sponge or Expanded Rubber
ASTM D 1171	Rubber Deterioration – Surface Ozone Cracking Outdoors or Chamber (Triangular Specimens)
ASTM D 3034	Type PSM Poly (Vinyl Chloride) (PVC) Sewer Pipe and Fittings
ASTM D 3212	Joints for Drain and Sewer Plastic Pipes Using Flexible Elastometric Seals
ASTM D 3350	Polyethylene Plastics Pipe and Fittings Materials

ASTM F 477	Elastometric Seals (Gaskets) for Joining Plastic Pipe
ASTM F 679	Poly (Vinyl Chloride) (PVC) Large-Diameter Plastic Gravity Sewer Pipe and Fittings
ASTM F 714	Polyethylene (PE) Plastic Pipe (SDR-PR) Based on Outside Diameter
ASTM F 794	Poly (Vinyl Chloride) (PVC) Profile Gravity Sewer Pipe and Fittings Based on Controlled Inside Diameter
ASTM F 894	Polyethylene (PE) Large Diameter Profile Wall and Sewer and Drain Pipe
ASTM F 949	Poly (Vinyl Chloride) (PVC) Corrugated Sewer Pipe with a Smooth Interior and Fittings
ASTM F 1417	Installation Acceptance of Plastic Gravity Sewer Lines Using Low Pressure Air

Submittals:
1. Product data.
2. Certificates, pipe line testing, soil density, water tight joints.
3. Frame and grating load capacity.

Products:
1. Pipe: Reinforced concrete pipe according to ASTM C 76.
2. Manholes and catch basins: Pre-cast reinforced concrete according to ASTM C 478.
3. Manhole castings, catch basins, frames, covers and grates: Grey cast iron with utility type cast in covers.
4. Manhole steps: Polypropylene encased steel design and for personnel access and safety.

Execution:
1. Provide pipe deflection and leakage testing.

SECTION 02722 – AGGREGATE AND/OR GRADED – CRUSHED AGGREGATE BASE COARSE

Scope:
1. Provide aggregate base course for site paving and surfacing systems.

References:
1. The publications referenced above (or below) establish minimum requirements for materials, systems and execution which may be specified in this Section.

AMERICAN SOCIETY FOR TESTING AND MATERIALS (ASTM)

ASTM C 88	Soundness of Aggregates by Use of Sodium Sulfate or Magnesium Sulfate
ASTM C 117	Materials Finer than 75 micrometer(No. 200) Sieve in Mineral Aggregates by Washing
ASTM C 127	Specific Gravity and Absorption of Course Aggregate
ASTM C 128	Specific Gravity and Absorption of Fine Aggregate
ASTM C 131	Resistance to Degradation of Small-Size Coarse Aggregate by Abrasion and Impact in the Los Angeles Machine
ASTM C 136	Sieve Analysis of Fine and Coarse Aggregates
ASTM D	Sampling Aggregates
ASTM D 422	Particle-Size Analysis of Soils
ASTM D 1556	Density and Unit Weight of Soil in Place by the Sand-Cone Method
ASTM D 1557	Laboratory Compaction Characteristics of Soil Using Modified Effort (56,000 ft-lbf/cu. Ft. (2,700 KN-m/cu.m.))
ASTM D 2487	Classification of Soils for Engineering Purposes (Unified Soil Classification System)

ASTM D 2922	Density of Soil and Soil-Aggregate in Place by Nuclear Methods (Shallow Depth)
ASTM D 3017	Water Content of Soil and Rock in Place by Nuclear Methods (Shallow Depth)
ASTM D 4318	Liquid Limit, Plastic Limit, and Plasticity Index of Soils

DEPARTMENT OF TRANSPORTATION (DOT)

Department of Transportation Specification for state in which the project is located.

Submittals: 1. Plants, tools and equipment used.

2. Delivery tickets.

3. Test reports – Field density and thickness, samplings.

Products: 1 Clean sound durable particles of crushed stone, gravel, recycled concrete or angular sand.

Execution: 1 Construct aggregate base and drainage layer according to the lines and grades shown on the plan.

SECTION 02741 – HOT-MIX ASPHALT (HMA) FOR ROADS

Scope: 1 Provide asphaltic concrete paving for roadways, parking areas, driveways, walkways.

References: 1. The publications referenced above (or below) establish minimum requirements for materials, systems and execution which may be specified in this Section.

AMERICAN ASSOCIATION OF STATE HIGHWAY AND TRANSPORTATION OFFICIALS (AASHTO)

AASHTO MP 1	Provisional Specification for Performance Graded Asphalt Binder
AASHTO MP 2	Superpave Volumetric Mix Design
AASHTO TP53	Determining Asphalt Content of Hot Mix Asphalt by the Ignition Method

AMERICAN SOCIETY FOR TESTING AND MATERIALS (ASTM)

ASTM C 88	Soundness of Aggregates by Use of Sodium Sulfate or Magnesium Sulfate
ASTM C 117	Materials Finer than 75 micrometer(No. 200) Sieve in Mineral Aggregates by Washing
ASTM C 131	Resistance to Degradation of Small-Size Coarse Aggregate by Abrasion and Impact in the Los Angeles Machine
ASTM D 140	Sampling Bituminous Materials
ASTM D 242	Mineral Filer for Bituminous Paving Mixtures
ASTM D 946	Penetration-Graded Asphalt Cement for Use in Pavement Construction
ASTM D 946	Penetration-Graded Asphalt Cement for Use in Pavement Construction
ASTM D 995	Mixing Plants for Hot-Mixed, Hot-Laid Bituminous Paving Mixtures
ASTM D 1461	Moisture or Volatile Distillates in Bituminous Paving Mixtures
ASTM D 1559	Resistance to Plastic Flow of Bituminous Mixtures Using Marshall Apparatus
ASTM D 2041	Theoretical Maximum Specific Gravity and Density of Bituminous Paving Mixtures
ASTM D 2172	Quantitative Extraction of Bitumen From Bituminous Paving Mixtures

ASTM D 2419	Sand Equivalent Value of Soils and Fine Aggregate
ASTM D 2489	Degree of Particle Coating of Bituminous-Aggregate Mixtures
ASTM D 2726	Bulk Specific Gravity and Density of Non-Absorptive Compacted Bituminous Mixture
ASTM D 2950	Density of Bituminous Concrete in Place by Nuclear Method
ASTM D 3381	Viscosity-Graded Asphalt Cement for Use in Pavement Construction
ASTM D 3665	Random Sampling of Construction Materials
ASTM D 3666	Minimum Requirements for Agencies Testing and Inspecting Bituminous Paving Materials
ASTM D 4125	Asphalt Content of Bituminous Mixtures by the Nuclear Method
ASTM D 4791	Flat Particles, Elongated Particles, or Flat and Elongated Particles in Course Aggregate
ASTM D 4867/D 4867M	Effect of Moisture on Asphalt Concrete Paving Mixture
ASTM D 5444	Mechanical Size Analysis of Extracted Aggregate
ASTM D 6307	Asphalt Content of Hot Mix Asphalt by Ignition Method

ASPHALT INSTITUTE (AI)

AI MS-2	Mix Design Methods for Asphalt, Concrete and Other Hot-Mix Types
AI-MS-22	Construction of Hot-Mix Asphalt Pavements

STATE OF CALIFORNIA DEPARTMENT OF TRANSPORTATION (CDT)

CDT Test 526	Operation of California Profilograph and Evaluation of Profiles

U.S. ARMY CORPS OF ENGINEERS (USACE)

COE CRD-C 171	Test Method for Determining Percentage of Crushed Particles in Aggregate.

DEPARTMENT OF TRANSPORTATION (DOT)

Department of Transportation Specification for state in which the project is located.

Submittals:

1. Mix design Job Mix Formula (JMF).
2. Quality control plan.
3. Aggregate tests.
4. Asphalt cement binder certification.
5. Equipment compliance, plant scale certification.

Products:

1. Provide JMF according to the local State DOT requirements and tolerances. Asphaltic cement materials shall be as designed and specified according to JMF.
2. Clean, sound durable aggregates meeting the Job Mix Formula (JMF) requirements.
3. Bituminous tack and prime coat according to State DOT Specifications.

Execution:

1. Prepare, mix and place job mix formula and other pavement section components according the State DOT practices and specifications to provide quality control monitoring and test results.

SECTION 02754 – CONCRETE PAVEMENT FOR SMALL PROJECTS

Scope: 1. Provide Portland cement concrete for small site projects such as sidewalks, driveway aprons, and vehicle door aprons.

References: 1. The publications referenced above (or below) establish minimum requirements for materials, systems and execution which may be specified in this Section.

ACI INTERNATIONAL (ACT)

ACT 211.1	Standard Practice for Selecting Proportions for Normal, Heavyweight, and Mass Concrete
ACI 301	Standard Specifications for Structural Concrete
ACI 305R	Hot Weather Concreting

AMERICAN SOCIETY FOR TESTING AND MATERIALS (ASTM)

ASTM A 184/A 184M	Fabricated Deformed Steel Bar Mats for Concrete Reinforcement
ASTM A 615/A 615M	Deformed and Plain Billet-Steel Bars for Concrete Reinforcement
ASTM C 31/C 31M	Making and Curing Concrete Test Specimens in the Field
ASTM C 33	Concrete Aggregates
ASTM C 39/C 39M	Compressive Strength of Cylindrical Concrete Specimens
ASTM C 94/C 94 M	Ready-Mixed Concrete
ASTM C 123	Lightweight Particles in Aggregate
ASTM C 143/C 143 M	Slump of Hydraulic Cement Concrete
ASTM C 150	Portland Cement
ASTM C 192/C 192 M	Making and Curing Concrete Test Specimens in the Laboratory
ASTM C 231	Air Content of Freshly Mixed Concrete by the Pressure Method
ASTM C 260	Air-Entraining Admixtures for Concrete
ASTM C 494/C 494M	Chemical Admixtures for Concrete
ASTM C 595	Blended Hydraulic Cements
ASTM C 618	Coal Fly Ash and Raw or Calcined Natural Pozzolan for Use as a Mineral Admixture in Concrete
ASTM C 666	Resistance of Concrete to Rapid Freezing and Thawing
ASTM C 881	Epoxy-Resin-Base Bonding Systems for Concrete
ASTM C 989	Ground Granulated Blast-Furnace Slag for Use in Concrete and Mortars
ASTM C 1077	Laboratories testing Concrete and Concrete Aggregates for Use in Construction and Criteria for Laboratory Evaluation
ASTM D 1751	Preformed Expansion Joint Filler for Concrete paving and Structural Construction (Nonextruding and Resilient Bituminous Types)
ASTM D 1752	Preformed Sponge Rubber and Cork Expansion Joint Fillers for Concrete Paving and Structural Construction

U.S. ARMY CORPS OF ENGINEERS (USACE)

COE CRD-C 130	Scratch Hardness of Coarse Aggregate Particles
COE CRD-C 300	Specifications for Membrane-Forming Compound for Curing Concrete

COE CRD-C 450	Standard Specification for Nonbituminous Inserts for Contraction Joints in Portland Cement Concrete Airfield Pavements, Sawable Type
COE CRD-C 572	Corps of Engineers Specifications for Polyvinylchloride Waterstop

NATIONAL READY-MIXED CONCRETE ASWOCIATION (NRMCA)

NRMCA CPMB 100	Concrete

DEPARTMENT OF TRANSPORTATION (DOT)

Department of Transportation Specification for state in which the project is located.

Submittals:
1. Product Data
2. Mix Proportions

Products:
1. Concrete mix design: Specific mix as required for sidewalks and aprons.
2. Reinforcing: Welded wire mesh and deformed bars.
3. Joints: Pre-formed joint fillers with applied sealers
4. Finish: Light broom.

SECTION 02763 – PAVEMENT MARKERS

Scope:
1. Provide pavement markings for striping, traffic control and pedestrian control, and information.

References:
1. The publications referenced above (or below) establish minimum requirements for materials, systems and execution which may be specified in this Section.

AMERICAN SOCIETY FOR TESTING AND MATERIALS (ASTM)

ASTM D 792	Density and Specific Gravity (Relative Density) of Plastics by Displacement
ASTM E 28	Softening Point of Resins by Ring and Ball Apparatus

U.S. GENERAL SERVICES ADMINISTRATION (GSA)

FS TT-B1325	Beads (Glass Spheres) Retro-Reflective (Metric)
FS TT-P-1952	Paint, Traffic and Airfield Marking, Waterborne (Metric)

Submittals:
1. Product data – Equipment, paint composition, personnel qualifications.
2. Test reports – Paint materials.
3. VOC certification meeting EPA and local requirements.

Products:
1. Paint and thermo plastic compounds with cleaners and primers need applicable stain local laws and conform to FS TT-P-152.
2. Comply with applicable State and local laws enacted to ensure compliance with Federal Clean Air Standards.

SECTION 02831 - CHAIN LINK FENCES AND GATES

Scope:

1. Chain link fence for general and high security applications.

2. Sliding and swing gates

References:

1. The publications referenced above (or below) establish minimum requirements for materials, systems and execution which may be specified in this Section.

AMERICAN SOCIETY FOR TESTING AND MATERIALS (ASTM)

ASTM A 121	Zinc-Coated (Galvanized) Steel Barbed Wire
ASTM A 153/A 153M	Zinc-Coating (Hot Dip) on Iron and Steel Hardware
ASTM A 392	Zinc-Coated Steel Chain-Link Fence Fabric
ASTM A 491	Aluminum-Coated Steel Chain-Link Fence Fabric
ASTM A 585	Aluminum-Coated Steel Barbed Wire
ASTM A 780	Repair of Damaged and Uncoated Areas of Hot-Dipped Galvanized Coatings
ASTM A 824	Metallic-Coated Steel Marcelled Tension Wire for Use With Chain Link Fence
ASTM C 94/C 94M	Ready-Mixed Concrete
ASTM F 626	Fence Fittings
ASTM F 883	Padlocks
ASTM F 900	Industrial and Commercial Swing Gates
ASTM F 1043	Strength and Protective Coatings on Metal Industrial Chain-Link Fence Framework
ASTM F 1083	Specification for Pipe, Steel, Hot-Dipped Zinc-Coated (Galvanized) Welded, for Fence Structures
ASTM F 1184	Industrial and Commercial Horizontal Slide Gate

Submittals:

1. Certificates: Statement, signed by an official authorized to certify on behalf of the manufacturer, attesting that the chain link fence and component materials meet the specified requirements.

Products:

1. Chain Link Fence Fabric: ASTM A 392, Class 2, zinc-coated steel wire with minimum coating weight of 2.0 ounces of zinc per square foot of coated surface, or ASTM A 491, Type I, aluminum-coated steel wire 0.3 ounces of zinc per square foot Fabric shall be fabricated of 9 gauge wire woven in 2 inch mesh. Fabric height shall be as shown. Fabric shall be twisted and barbed on the top selvage and knuckled on the bottom selvage.

2. Gates: ASTM F 900 and/or ASTM F 1184. Gate shall be the type and swing shown. Gate frames shall conform to strength and coating requirements of ASTM F 1083 for Group IA, steel pipe, with external coating Type A, nominal pipe size (NPS) 1-1/2. Gate frames shall conform to strength and coating requirements of ASTM F 1043, for Group IC, steel pipe with external coating Type A or Type B, nominal pipe size (NPS) 1-1/2. Gate fabric shall be as specified for chain link fabric. Gate leaves more than 8 feet wide shall have either intermediate members and diagonal truss rods or shall have tubular members as necessary to provide rigid construction, free from sag or twist. Gate leaves less than 8 feet wide shall have truss rods or intermediate braces. Gate fabric shall be attached to the gate frame by method standard with the manufacturer except that welding will not be permitted. Latches, hinges, stops, keepers, rollers, and other hardware items shall be furnished as required for the operation of the gate. Latches shall be arranged for padlocking so that the padlock will be accessible from both sides of the gate. Stops shall be provided for holding the gates in the open position. For high security applications, each end member of gate frames shall

be extended sufficiently above the top member to carry three strands of barbed wire in horizontal alignment with barbed wire strands on the fence.

3. Metal Posts for Chain Link Fence: ASTM F 1083, zinc-coated. Group IA, with external coating Type A steel pipe. Group IC steel pipe, zinc-coated with external coating Type A or Type B and Group II , roll-formed steel sections, shall meet the strength and coating requirements of ASTM F 1043. Group III, ASTM F 1043 steel H-section may be used for line posts in lieu of line post shapes specified for the other classes. Sizes shall be as shown on the drawings. Line posts and terminal (corner, gate, and pull) posts selected shall be of the same designation throughout the fence. Gate post shall be for the gate type specified subject to the limitation specified in ASTM F 900 and/or ASTM F 1184.

4. Braces And Rails: ASTM F 1083, zinc-coated, Group IA, steel pipe, size NPS 1-1/4. Group IC steel pipe, zinc-coated, shall meet the strength and coating requirements of ASTM F 1043. Group II, formed steel sections, size 1-21/32 inch, conforming to ASTM F 1043, may be used as braces and rails if Group II line posts are furnished.

5. Tension Wire: Type I or Type II, Class 2 coating, in accordance with ASTM A 824

6. Accessories: ASTM F 626. Ferrous accessories shall be zinc or aluminum coated. Truss rods shall be furnished for each terminal post. Truss rods shall be provided with turnbuckles or other equivalent provisions for adjustment. Barbed wire shall be 2 strand, 12-1/2 gauge wire, zinc-coated, Class 3 in accordance with ASTM A 121 or aluminum coated Type I in accordance with ASTM A 585. Barbed wire shall be four-point barbed type steel wire. Barbed wire support arms shall be the singlearm type and of the design required for the post furnished. Tie wire for attaching fabric to rails, braces, and posts shall be 9 gauge steel wire and match the coating of the fence fabric. Tie wires for attaching fabric to tension wire on high security fences shall be 16 ga stainless steel. The tie wires shall be a double loop and 6.5 inches in length. Miscellaneous hardware coatings shall conform to ASTM A 153/A 153M unless modified.

7. Concrete: ASTM C 94/C 94M, using 3/4 inch maximum size aggregate, and having minimum compressive strength of 3000 psi at 28 days. Grout shall consist of one part portland cement to three parts clean, well-graded sand and the minimum amount of water to produce a workable mix

8. Padlocks: ASTM F 883, Type P01, Option B, Grade 6. All padlocks shall be keyed into master key system as specified in Section 08710 DOOR HARDWARE.

Execution:

1. Grounding: Fences shall be grounded on each side of all gates, at each corner, at the closest approach to each building located within 50 feet of the fence, and where the fence alignment changes more than 15 degrees. Grounding locations shall not exceed 650 feet. Each gate panel shall be bonded with a flexible bond strap to its gate post. Fences crossed by powerlines of 600 volts or more shall be grounded at or near the point of crossing and at distances not exceeding 150 feet on each side of crossing. Ground conductor shall consist of No. 8 AWG solid copper wire. Grounding electrodes shall be 3/4 inch by 10 foot long copper-clad steel rod. Electrodes shall be driven into the earth so that the top of the electrode is at least 6 inches below the grade. Where driving is impracticable, electrodes shall be buried a minimum of 12 inches deep and radially from the fence. The top of the electrode shall be not less than 2 feet or more than 8 feet from the fence. Ground conductor shall be clamped to the fence and electrodes with bronze grounding clamps to create electrical continuity between fence posts, fence fabric, and ground rods. After installation the total resistance of fence to ground shall not be greater than 25 ohms.

SECTION 02900 - LANDSCAPING

Scope:

1. Provide topsoil.

2. Provide trees, shrubs, ground covers, perennials and vines.

3. Provide lawns and native grass/wildflower areas
4. Provide related materials such as soil amendments and fertilizers.

5. Provide related landscape accessories such as metal edgings, rock mulch and weed barrier.

6. Provide pruning and relocation of existing plant materials.

7. Provide weather and climatic planting limitations.

8. Define plant warranty (one-year typical). Require landscape maintenance instructions to be submitted which recommend procedures to be established by the Owner for maintenance of exterior plants during a calendar year.

Products:

1. Trees and plants: Balled and burlapped and container–grown plants in accordance with American Standard for Nursery Stock, ANSI Z60.1. (Bare root plants are generally not used).

2. Topsoil: From site stockpile with additional fertile, friable topsoil from local source.

3. Lawns:
   a. Seed: New crop seed mixture.
   b. Sod: Vigorous, strongly rooted sod, 2 years old.

4. Native Grass Seed Areas
   a. Seed source shall not exceed a 250 mile radius from the project site.

5. Soil Amendments and Fertilizer: Nursery recommended corrections and planting soil additions based upon certified soil and percolation test.

6. Mulch:
   a. Building Maintenance Strip: Washed, 4-6” river-bed fieldstone.
   b. Parking lot islands: ¾” river-bed stone mulch.
   c. Periphery landscape: Shredded hardwood bark.

7. Accessories:
   a. Edgings: 3/16” x 4” Steel Edger (ASTM A 569)
   b. Fibermat weed barrier.
   c. Guying and Staking Material
   d. Tree wrapping material.

Execution:

1. Protection of Planting Areas

   Before excavations are made, precautionary measures shall be taken to protect existing vegetation during planting operations. Locations for plants and outlines of areas to be planted shall be marked on the ground and approved before excavation is made. Shrubs shall be planted not less than 30’ from a building unless specifically designated.

2. Plant Pit Excavation

Excavation for planting shall include stripping and stacking all acceptable topsoil encountered within the areas to be excavated for trenches, plant pits, and planting beds. Excavation shall extend to the required subgrades indicated, but in no case less than specified. Plant pits shall be circular in outline or square if machine dug and shall have vertical sides and flat bottoms. Minimum depths of plant pits shall be measured from finished grade. Planting beds in which ground cover or similar plantings are required shall be excavated to the depth shown to eliminate objectionable weeds or grasses. Diameter or minimum width of pits shall be at least 1/3 greater than the diameter of the ball. Acceptable excess excavated topsoil shall be used to form saucers around plants, wasted uniformly over nearby low or rough lawn areas, or disposed as approved. Excess soils not required or not suitable for the above usage shall be disposed as directed.

3. Plant Installation

Plants shall be planted in pits and at such levels that, after settlement, plants will bear the same relation to the finished grade of the surrounding ground as to the grade of the ground from which plants were dug. Plants shall be set plumb and rigidly braced in position until the soil has been tamped solidly around the ball. Plants shall be planted in approved topsoil blend which shall be settled by watering and tamping. To compensate for shrinkage, the finished grade of the topsoil blend prior to watering shall be fixed at an elevation that is 10 percent of the fill depth higher than the desired finished grade. To facilitate watering, a shallow saucer deep shall be formed around each plant by placing a ridge of topsoil blend around the edge of each filled-in pit. NOTE: The following paragraph describes the setting of balled and burlapped plants. Balled and burlapped (BB) plants shall be placed on a minimum of 6” of compacted topsoil blend that has been hand-tamped prior to placing plants. Plants shall then be placed in the plant pit and the topsoil blend tamped to fill all voids under the base and around the ball to a height of one-half the depth of the ball. Cloth, ropes, wires, and other wrapping material shall be cut away from the top half of the ball, and backfilling shall be completed. In no case shall cloth be pulled out from under the ball,: Containers shall be opened and the plants carefully removed so that the earth around the roots of the plants remains unbroken. Plants shall be placed on a minimum of 6” of compacted topsoil blend that has been hand-tamped prior to placing plants. Plants shall be placed in the plant pit and the topsoil blend tamped to fill all voids under the base and around the ball to the full depth of the ball.

DIVISION 3 - CONCRETE

SECTION 03100 – STRUCTURAL CONCRETE FORMWORK

Scope: 1. Form work for cast-in-place and architectural cast-in-place concrete

References: 1. The publications referenced above (or below) establish minimum requirements for materials, systems and execution which may be specified in this Section.

ACI INTERNATIONAL (ACI)

ACI 301	Standard Specifications for Structural Concrete
ACI 318/318R	Building Code Requirements for Structural Concrete and Commentary
ACI 347R	Guide to Formwork for Concrete

AMERICAN HARDBOARD ASSOCIATION (AHA)

AHA A135.4	Basic Hardboard

AMERICAN SOCIETY FOR TESTING AND MATERIALS (ASTM)

ASTM C578 Rigid, Cellular Polystyrene Thermal Insulation

U.S. DEPARTMENT OF COMMERCE (DOC)

PS-1 Voluntary Product Standard - Construction and Industrial Plywood

General:

1. Design: Formwork shall be designed in accordance with methodology of ACI 347R for anticipated loads, lateral pressures, and stresses. Forms shall be capable of producing a surface, which meets the requirements of the class of finish specified in Section 03300 CAST-IN-PLACE STRUCTURAL CONCRETE. Forms shall be capable of withstanding the pressures resulting from placement and vibration of concrete.

2. Storage And Handling: Form materials shall be stored above ground level in a dry location. Form materials shall be kept dry until installed and overlaid with concrete.

Products:

1. Form Materials
   a. Forms For Class A and Class B Finish: Forms for Class A and Class B finished surfaces shall be plywood panels conforming to PS-1, Grade B-B concrete form panels, Class I or II. Other form materials or liners may be used provided the smoothness and appearance of concrete produced will be equivalent to that produced by the plywood concrete form panels. Forms for round columns shall be the prefabricated seamless type.
   b. Forms For Class C Finish: Forms for Class C finished surfaces shall be shiplap lumber; plywood conforming to PS-1, Grade B-B concrete form panels, Class I or II; tempered concrete form hardboard conforming to AHA A135.4; other approved concrete form material; or steel, except that steel lining on wood sheathing shall not be used. Forms for round columns may have one vertical seam.
   c. Forms For Class D Finish: Forms for Class D finished surfaces, except where concrete is placed against earth, shall be wood or steel or other approved concrete form material.
   d. Retain-In-Place Metal Forms: Retain-in-place metal forms for concrete slabs and roofs shall be as specified in Section 05300 STEEL DECKING.
   e. Pan-Form Units: Pan-form units for one-way or two-way concrete joist and slab construction shall be factory-fabricated units of the approximate section indicated. Units shall consist of steel or molded fiberglass concrete form pans. Closure units shall be furnished as required.
   f. Form Ties: Form ties shall be factory-fabricated metal ties, shall be of the removable or internal disconnecting or snap-off type, and shall be of a design that will not permit form deflection and will not spall concrete upon removal. Solid backing shall be provided for each tie. Except where removable tie rods are used, ties shall not leave holes in the concrete surface less than 1/4 inch nor more than 1 inch deep and not more than 1 inch in diameter. Removable tie rods shall be not more than 1-1/2 inches in diameter.
   g. Form Releasing Agents: Form releasing agents shall be commercial formulations that will not bond with, stain or adversely affect concrete surfaces. Agents shall not impair subsequent treatment of concrete surfaces depending upon bond or adhesion nor impede the wetting of surfaces to be cured with water or curing compounds.

SECTION 03200 – CONCRETE REINFORCEMENT

Scope

1. Concrete reinforcement, including welded wire fabric, for building construction in conjunction with Section 03300 CAST-IN-PLACE CONCRETE

References: 1. The publications referenced above (or below) establish minimum requirements for materials, systems and execution which may be specified in this Section.

ACI INTERNATIONAL (ACI)

ACI 301	Standard Specifications for Structural Concrete
ACI 318/318R	Building Code Requirements for Structural Concrete and Commentary
ACI 318M/318RM	Building Code Requirements for Structural Concrete and Commentary (Metric)

AMERICAN SOCIETY FOR TESTING AND MATERIALS (ASTM)

ASTM A53	Pipe, Steel, Black and Hot-Dipped, Zinc-Coated, Welded and Seamless
ASTM A82	Steel Wire, Plain, for Concrete Reinforcement
ASTM A184/A184M	Fabricated Deformed Steel Bar Mats for Concrete Reinforcement
ASTM A185	Steel Welded Wire Fabric, Plain, for Concrete Reinforcement
ASTM A496	Steel Wire, Deformed, for Concrete Reinforcement
ASTM A497	Steel Welded Wire Fabric, Deformed, for Concrete Reinforcement
ASTM A615/A615M	Deformed and Plain Billet-Steel Bars for Concrete Reinforcement
ASTM A675/A675M	Steel Bars, Carbon, Hot-Wrought, Special Quality, Mechanical Properties
ASTM A706/A706M	Low-Alloy Steel Deformed and Plain Bars for Concrete Reinforcement
ASTM A767/A767M	Zinc-Coated (Galvanized) Steel Bars in Concrete Reinforcement
ASTM A775/A775M	Epoxy-Coated Reinforcement Steel Bars
ASTM A884/A884M	Epoxy-Coated Steel Wire and Welded Wire Fabric for Reinforcement
ASTM C1116	Fiber-Reinforced Concrete and Shotcrete

AMERICAN WELDING SOCIETY (AWS)

AWS D1.4	Structural Welding Code - Reinforcing Steel

CONCRETE REINFORCING STEEL INSTITUTE (CRSI)

CRSI MSP-1	Manual of Standard Practice

General: 1. Submittals: The following shall be submitted to the Engineer of Record for approval in accordance with Section 01331 Submittal Procedures For Design/Build:

a. Shop Drawings; Detail drawings showing reinforcing steel placement, schedules, sizes, grades, and splicing and bending details. Drawings shall show support details including types, sizes and spacing.

b. Certificates

1) Reinforcing Steel; Certified copies of mill reports attesting that the reinforcing steel furnished contains no less than 25 percent recycled scrap steel and meets the requirements specified herein, prior to the installation of reinforcing steel.

2) Welder certificates, certifying welders employed on the Work, verifying AWS qualification within the previous 12 months.

2. Welding: Welders shall be qualified in accordance with AWS D1.4. Qualification test shall be performed at the worksite and the Contractor shall notify the Contracting Officer 24 hours prior to conducting tests. Special welding procedures and welders qualified by others may be accepted as permitted by AWS D1.4.

3. Delivery And Storage: Reinforcement and accessories shall be stored off the ground on platforms, skids, or other supports.

Products: 1. Fabricated Bar Mats: Fabricated bar mats shall conform to ASTM A184/A184M.

2. Reinforcing Steel: Reinforcing steel shall be deformed bars conforming to ASTM A615/A615M or ASTM A706/A706M, grades and sizes as indicated. Cold drawn wire used for spiral reinforcement shall conform to ASTM A82. In highly corrosive environments or when directed by the Contracting Officer, reinforcing steel shall conform to ASTM A767/A767M or ASTM A775/A775M as appropriate.

3. Welded Wire Fabric: Welded wire fabric shall conform to ASTM A185 . When directed by the Contracting Officer for special applications, welded wire fabric shall conform to ASTM A884/A884M.

4. Wire Ties: Wire ties shall be 16 ga or heavier black annealed steel wire.

5. Supports: Bar supports for formed surfaces shall be designed and fabricated in accordance with CRSI MSP-1 and shall be steel or precast concrete blocks. Precast concrete blocks shall have wire ties and shall be not less than 4 inches square when supporting reinforcement on ground. Precast concrete block shall have compressive strength equal to that of the surrounding concrete. Where concrete formed surfaces will be exposed to weather or where surfaces are to be painted, steel supports within 1/2 inch of concrete surface shall be galvanized, plastic protected or of stainless steel. Concrete supports used in concrete exposed to view shall have the same color and texture as the finish surface. For slabs on grade, supports shall be precast concrete blocks, plastic coated steel fabricated with bearing plates, or specifically designed wire-fabric supports fabricated of plastic.

6. Welds: Weld reinforcement in accordance with AWS D1.4 and AWS D12.1. Welding shall be limited to A706 reinforcing only

SECTION 03300 - CAST-IN-PLACE CONCRETE

Scope:

1. Provide cast-in-place concrete for general building construction, including, without limitation:
   a. Footings and foundations.
   b. Slab on grade.
   c. Concrete fill for metal floor and roof decks.
   d. Base course for exterior paving.
   e. Retaining walls.
   f. Requirements (materials, mixes, finishes) apply to concrete work specified in other sections, such as sidewalk paving, aprons and fill for metal pan stair treads.

References:

1. The publications referenced above (or below) establish minimum requirements for materials, systems and execution which may be specified in this Section.

   ACI INTERNATIONAL (ACI)

ACI 117/117R	Standard Tolerances for Concrete Construction and Materials
ACI 211.1	Standard Practice for Selecting Proportions for Normal, Heavyweight, and Mass Concrete
ACI 211.2	Standard Practice for Selecting Proportions for Structural Lightweight Concrete
ACI 213R	Guide for Structural Lightweight Aggregate Concrete
ACI 214.3R	Simplified Version of the Recommended Practice for Evaluation of Strength Test Result Concrete
ACI 301	Standard Specifications for Structural Concrete
ACI 303R	Guide to Cast-In-Place Architectural Concrete Practice
ACI 305R	Hot Weather Concreting

ACI 318/318R Building Code Requirements for Structural Concrete and Commentary

AMERICAN ASSOCIATION OF STATE HIGHWAY AND TRANSPORTATION OFFICIALS (AASHTO)

AASHTO M 182 Burlap Cloth Made from Jute or Kenaf

AMERICAN SOCIETY FOR TESTING AND MATERIALS (ASTM)

ASTM C1017/C1017M	Chemical Admixtures for Use in Producing Flowing Concrete
ASTM C1059	Latex Agents for Bonding Fresh to Hardened Concrete
ASTM C1064/C1064M	Temperature of Freshly Mixed Portland Cement Concrete
ASTM C1077	Laboratories Testing Concrete and Concrete Aggregates for Use in Construction and Criteria for Laboratory Evaluation
ASTM C1107	Packaged Dry, Hydraulic-Cement Grout(Nonshrink)
ASTM C1116	Fiber-Reinforced Concrete and Shotcrete
ASTM C1240	Silica Fume for Use as a Mineral Admixture in Hydraulic Cement Concrete, Mortar and Grout
ASTM C131	Resistance to Degradation of Small-Size Coarse Aggregate by Abrasion and Impact in the Los Angeles Machine
ASTM C136	Sieve Analysis of Fine and Coarse Aggregates
ASTM C143/C143M	Slump of Hydraulic Cement Concrete
ASTM C150	Portland Cement
ASTM C171	Sheet Materials for Curing Concrete
ASTM C172	Sampling Freshly Mixed Concrete
ASTM C173	Air Content of Freshly Mixed Concrete by the Volumetric Method
ASTM C192/C192M	Making and Curing Concrete Test Specimens in the Laboratory
ASTM C231	Air Content of Freshly Mixed Concrete by the Pressure Method
ASTM C260	Air-Entraining Admixtures for Concrete
ASTM C309	Liquid Membrane-Forming Compounds for Curing Concrete
ASTM C31/C31M	Making and Curing Concrete Test Specimens in the Field
ASTM C33	Concrete Aggregates
ASTM C330	Lightweight Aggregates for Structural Concrete
ASTM C39/C39M	Compressive Strength of Cylindrical Concrete Specimens
ASTM C42/C42M	Obtaining and Testing Drilled Cores and Sawed Beams of Concrete
ASTM C494/C494M	Chemical Admixtures for Concrete
ASTM C496	Splitting Tensile Strength of Cyclindrical Concrete Specimens
ASTM C552	Cellular Glass Thermal Insulation
ASTM C567	Unit Weight of Structural Lightweight Concrete
ASTM C578	Rigid, Cellular Polystyrene Thermal Insulation
ASTM C591	Unfaced Preformed Rigid Cellular Polyisocyanurate Thermal Insulation
ASTM C595	Blended Hydraulic Cements
ASTM C595M	Blended Hydraulic Cements (Metric)
ASTM C618	Coal Fly Ash and Raw or Calcined Natural Pozzolan for Use as a Mineral Admixture in Concrete
ASTM C685	Concrete Made by Volumetric Batching and Continuous Mixing
ASTM C78	Flexural Strength of Concrete (Using Simple Beam With Third-Point Loading)
ASTM C881	Epoxy-Resin-Base Bonding Systems for Concrete
ASTM C937	Grout Fluidifier for Preplaced-Aggregate Concrete
ASTM C94/C94M	Ready-Mixed Concrete
ASTM C940	Expansion and Bleeding of Freshly Mixed Grouts for Preplaced-Aggregate Concrete in the Laboratory
ASTM C989	Ground Granulated Blast-Furnace Slag for Use in Concrete and Mortars

ASTM D1751	Preformed Expansion Joint Filler for Concrete Paving and Structural Construction (Nonextruding and Resilient Bituminous Types)
ASTM D1752	Preformed Sponge Rubber and Cork Expansion Joint Fillers for Concrete Paving and Structural Construction
ASTM D75	Sampling Aggregates
ASTM E1155	Determining Floor Flatness and Levelness Using the F-Number System
ASTM E1155M	Determining Floor Flatness and Levelness Using the F-Number System (Metric)
ASTM E96	Water Vapor Transmission of Materials

NATIONAL INSTITUTE OF STANDARDS AND TECHNOLOGY (NIST)

NIST HB 44	NIST Handbook 44: Specifications, Tolerances, and other Technical Requirements for Weighing and Measuring Devices

NATIONAL READY-MIXED CONCRETE ASSOCIATION (NRMCA)

NRMCA CPMB 100	Concrete Plant Standards \n/c\X
NRMCA QC 3	Quality Control Manual: Section 3, Plant Certifications Checklist: Certification of Ready Mixed Concrete Production Facilities
NRMCA TMMB 100	Truck Mixer Agitator and Front Discharge Concrete Carrier Standards

U.S. ARMY CORPS OF ENGINEERS (USACE)

COE CRD-C 104	Method of Calculation of the Fineness Modulus of Aggregate
COE CRD-C 400	Requirements for Water for Use in Mixing or Curing Concrete
COE CRD-C 521	Standard Test Method for Frequency and Amplitude of Vibrators for Concrete
COE CRD-C 540	Standard Specification for Nonbituminous Inserts for Contraction Joints in Portland Cement Concrete Airfield Pavements, Sawable Type
COE CRD-C 572	Corps of Engineers Specifications for Polyvinylchloride Waterstop
COE CRD-C 94	Surface Retarders

General:

1. Submittals: The following shall be submitted to the Engineer of Record (unless noted otherwise) for approval in accordance with Section 01300 SUBMITTALS:
   a. Shop Drawings
      1) Mixture Proportions; The results of trial mixture design studies along with a statement giving the maximum nominal coarse aggregate size and the proportions of ingredients that will be used in the manufacture of each strength or class of concrete, at least 14 days prior to commencing concrete placing operations. Aggregate weights shall be based on the saturated surface dry condition. The statement shall be accompanied by test results from an approved independent commercial testing laboratory, showing that mixture design studies have been made with materials proposed for the project and that the proportions selected will produce concrete of the qualities indicated. No substitutions shall be made in the materials used in the mixture design studies without additional tests to show that the quality of the concrete is satisfactory.
      2) Lightweight Aggregate Concrete; Written recommendations from lightweight aggregate supplier on batching and mixing cycles.
   b. Samples
      1) Surface Retarder; Sample of surface retarder material with manufacturer's instructions for application in conjunction with air-water cutting.
   c. Test Reports
      1) Testing and Inspection for Contractor Quality Control; Certified copies of laboratory test reports, including mill tests and all other test data, for portland cement, blended cement, pozzolan, ground

granulated blast furnace slag, silica fume, aggregate, admixtures, and curing compound proposed for use on this project.

d. Certificates
   1) Qualifications; Written documentation for Contractor Quality Control personnel.

2. Qualifications:
   a. Contractor Quality Control personnel assigned to concrete construction shall be American Concrete Institute (ACI) Certified Workmen in one of the following grades or shall have written evidence of having completed similar qualification programs:
      1) Concrete Field Testing Technician, Grade I
      2) Concrete Laboratory Testing Technician, Grade I or II
      3) Concrete Construction Inspector, Level II
   a. Concrete Transportation Construction Inspector or Reinforced Concrete Special Inspector, Jointly certified by American Concrete Institute (ACI), Building Official and Code Administrators International (BOCA), International Conference of Building Officials (ICBO), and Southern Building Code Congress International (SBCCI).
   b. The foreman or lead journeyman of the flatwork finishing crew shall have similar qualification for ACI Concrete Flatwork Technician/Finisher or equal, with written documentation.

3. Field Test Panels:
   a. Field test panels shall be constructed prior to beginning of work using the materials and procedures proposed for use on the job, to demonstrate the results to be attained. The quality and appearance of each panel shall be subject to the approval of the Contracting Officer, and, if not judged satisfactory, additional panels shall be constructed until approval is attained. Formed or finished surfaces in the completed structure shall match the quality and appearance of the approved field example.
      1) Sample Wall Panels: One sample panel at least 4 feet by 5 feet and 6 inches thick shall be constructed to demonstrate Class A formed finish and a similar one for Class B formed finish. Panels shall be located on project site. Each panel shall include a full length and full width joint line and shall have at least two voids each at least 12 inches by 12 inches by 3 inches deep either impressed in the concrete as placed or chipped in the hardened concrete. After the concrete is 7 days old, the voids shall be patched to demonstrate the effectiveness and the appearance of the Contractor's repair procedures.

4. Special Requirements: Not Used.

5. General Requirements: Conform to ACI 301 except as herein modified. All materials are to be certified by the Manufacturer or sampled, pretested and approved before use.
   a. Tolerances: Except as otherwise specified herein, tolerances for concrete batching, mixture properties, and construction as well as definition of terms and application practices shall be in accordance with ACI 117/117R. Level and grade tolerance measurements of slabs shall be made as soon as possible after finishing; when forms or shoring are used, the measurements shall be made prior to removal.
   b. Strength Requirements and w/c Ratio
      1) Strength Requirements: Specified compressive strength (f'c) shall be as required by the structural design. Concrete made with high-early strength cement shall have a 7-day strength equal to the specified 28-day strength for concrete made with Type I or II portland cement. Compressive strength shall be determined in accordance with ASTM C39/C39M. Flexural strength shall be determined in accordance with ASTM C78.
         a). Evaluation of Concrete Compressive Strength. Compressive strength specimens 6 by 12 inch cylinders) shall be fabricated by the Contractor and laboratory cured in accordance with ASTM C31/C31M and tested in accordance with ASTM C39/C39M. The strength of the concrete will be considered satisfactory so long as the average of all sets of three consecutive test results equals or exceeds the specified compressive strength f'c and no individual test

result falls below the specified strength f'c by more than 500 psi. A "test" is defined as the average of two companion cylinders, or if only one cylinder is tested, the results of the single cylinder test. Additional analysis or testing, including taking cores and/or load tests may be required at the Contractor's expense when the strength of the concrete in the structure is considered potentially deficient.

b) Investigation of Low-Strength Compressive Test Results. When any strength test of standard-cured test cylinders falls below the specified strength requirement by more than 500 psi or if tests of field-cured cylinders indicate deficiencies in protection and curing, steps shall be taken to assure that the load-carrying capacity of the structure is not jeopardized. When the strength of concrete in place is considered potentially deficient, cores shall be obtained and tested in accordance with ASTM C42/C42M. At least three representative cores shall be taken from each member or area of concrete in place that is considered potentially deficient. The location of cores will be determined by the Engineer of Record to least impair the strength of the structure. Concrete in the area represented by the core testing will be considered adequate if the average strength of the cores is equal to at least 85 percent of the specified strength requirement and if no single core is less than 75 percent of the specified strength requirement. Non-destructive tests (tests other than test cylinders or cores) shall not be used as a basis for acceptance or rejection. The Contractor shall perform the coring and repair the holes.

c) Load Tests. If the core tests are inconclusive or impractical to obtain or if structural analysis does not confirm the safety of the structure, load tests may be directed by the Government in accordance with the requirements of ACI 318/318R. Concrete work evaluated by structural analysis or by results of a load test as being understrength shall be corrected in a manner satisfactory to the Government. All investigations, testing, load tests, and correction of deficiencies shall be performed by and at the expense of the Contractor and must be approved by the Government, except that if all concrete is found to be in compliance with the drawings and specifications, the cost of investigations, testing, and load tests will be at the expense of the Government.

d) Evaluation of Concrete Flexural Strength. Flexural strength specimens (beams) shall be fabricated by the Contractor and laboratory cured in accordance with ASTM C31/C31M and tested in accordance with ASTM C78. The strength of the concrete will be considered satisfactory so long as the average of all sets of three consecutive test results equals or exceeds the specified flexural strength and no individual test result falls below the specified flexural strength by more than 50 psi. A "test" is defined as the average of two companion beams. Additional analysis or testing, including taking cores and/or load tests may be required at the Contractor's expense when the strength of the concrete in the slab is considered potentially deficient.

2) Water-Cement Ratio

A. Maximum water-cement ratio (w/c) for normal weight concrete shall be as follows:

WATER-CEMENT RATIO, BY WEIGHT	STRUCTURE OR PORTION OF STRUCTURE
0.45	4500 psi
0.50	4000 psi
0.60	3000 psi

These water-cement ratios may cause higher strengths than that required above for compressive or flexural strength. The maximum water cement ratio required will be the equivalent water cement ratio as determined by conversion from the weight ratio of water to cement plus pozzolan, silica fume, and ground granulated blast furnace slag (GGBF slag) by the weight equivalency method as described in ACI 211.1. In the case where silica fume or

GGBF slag is used, the weight of the silica fume and GGBF slag shall be included in the equations of ACI 211.1 for the term P which is used to denote the weight of pozzolan.

c. Air Entrainment: Except as otherwise specified for lightweight concrete, all normal weight concrete exposed to weather shall be air entrained as required by the structural design. Concrete with specified strength over 5000 psi may have 1.0 percent less air than specified. Specified air content shall be attained at point of placement into the forms. Air content for normal weight concrete shall be determined in accordance with ASTM C231. Lightweight concrete in the floor framing parts of the structure shall be air-entrained with a total air content of 4.5 to 7.5 percent, except that if the nominal maximum size coarse aggregate is 3/8 inch or less, the air content shall be 5.5 to 8.5 percent. Air content for lightweight concrete shall be determined in accordance with ASTM C173.

d. Slump: Slump of the concrete, as delivered to the point of placement into the forms, shall be within the structural design requirements. Slump shall be determined in accordance with ASTM C143/C143M.

e. Concrete Temperature: The temperature of the concrete as delivered shall not exceed 90 deg F. When the ambient temperature during placing is 40 deg F or less, or is expected to be at any time within 6 hours after placing, the temperature of the concrete as delivered shall be between 55 and 75 deg F.

f. Size of Coarse Aggregate: The largest feasible nominal maximum size aggregate (NMSA) specified in paragraph AGGREGATES shall be used in each placement. However, nominal maximum size of aggregate shall not exceed any of the following: three-fourths of the minimum cover for reinforcing bars, three-fourths of the minimum clear spacing between reinforcing bars, one-fifth of the narrowest dimension between sides of forms, or one-third of the thickness of slabs or toppings.

g. Special Properties and Products: Concrete may contain admixtures other than air entraining agents, such as water reducers, superplasticizers, or set retarding agents to provide special properties to the concrete, if specified or approved. Any of these materials to be used on the project shall be used in the mix design studies.

h. Lightweight Aggregate Structural Concrete: Lightweight aggregate structural concrete shall conform to the requirements specified for normal weight concrete except as specified herein. Compressive strength shall be determined by test specimens that have been air dried at 50 percent relative humidity for the last 21 days. Air-dry unit weight shall be not over 115 pcf at 28 days as determined by ASTM C567. However, fresh unit weight shall be used for acceptance during concreting, using a correlation factor between the two types of unit weight as determined during mixture design studies. Lightweight aggregate structural concrete floor fill shall have an air-dry unit weight not exceeding 115 pcf.

i. Technical Service for Specialized Concrete: The services of a factory trained technical representative shall be obtained to oversee proportioning, batching, mixing, placing, consolidating, and finishing of specialized structural concrete. The technical representative shall be on the job full time until the Contracting Officer is satisfied that field controls indicate concrete of specified quality is furnished and that the Contractor's crews are capable of continued satisfactory work. The technical representative shall be available for consultation with, and advice to, Government forces.

6. Mixture Proportions: Concrete shall be composed of portland cement, other cementitious and pozzolanic materials as specified, aggregates, water and admixtures as specified.

a. Proportioning Studies for Normal Weight Concrete: Trial design batches, mixture proportioning studies, and testing requirements for various classes and types of concrete specified shall be the responsibility of the Contractor. Except as specified for flexural strength concrete, mixture proportions shall be based on compressive strength as determined by test specimens fabricated in accordance with ASTM C192/C192M and tested in accordance with ASTM C39/C39M. Samples of all materials used in mixture proportioning studies shall be representative of those proposed for use in the project and shall be accompanied by the manufacturer's or producer's test reports indicating compliance with these specifications. Trial mixtures having proportions, consistencies, and air content suitable for the work shall be made based on methodology described in ACI 211.1, using at least three different water-cement ratios for each type of mixture, which will produce a range of strength encompassing those required for each class and type of concrete required on the project. The maximum water-cement ratios required in subparagraph Water-Cement Ratio will be the equivalent water-cement ratio as determined by

conversion from the weight ratio of water to cement plus pozzolan, silica fume, and ground granulated blast furnace slag (GGBF slag) by the weight equivalency method as described in ACI 211.1. In the case where silica fume or GGBF slag is used, the weight of the silica fume and GGBF slag shall be included in the equations in ACI 211.1 for the term P, which is used to denote the weight of pozzolan. If pozzolan is used in the concrete mixture, the minimum pozzolan content shall be 15 percent by weight of the total cementitious material, and the maximum shall be 35 percent. Laboratory trial mixtures shall be designed for maximum permitted slump and air content. Separate sets of trial mixture studies shall be made for each combination of cementitious materials and each combination of admixtures proposed for use. No combination of either shall be used until proven by such studies, except that, if approved in writing and otherwise permitted by these specifications, an accelerator or a retarder may be used without separate trial mixture study. Separate trial mixture studies shall also be made for concrete for any conveying or placing method proposed which requires special properties and for concrete to be placed in unusually difficult placing locations. The temperature of concrete in each trial batch shall be reported. For each water-cement ratio, at least three test cylinders for each test age shall be made and cured in accordance with ASTM C192/C192M. They shall be tested at 7 and 28 days in accordance with ASTM C39/C39M. From these test results, a curve shall be plotted showing the relationship between water-cement ratio and strength for each set of trial mix studies. In addition, a curve shall be plotted showing the relationship between 7 day and 28 day strengths. Each mixture shall be designed to promote easy and suitable concrete placement, consolidation and finishing, and to prevent segregation and excessive bleeding.

b. Proportioning Studies for Flexural Strength Concrete: Trial design batches, mixture proportioning studies, and testing requirements shall conform to the requirements specified in paragraph Proportioning Studies for Normal Weight Concrete, except that proportions shall be based on flexural strength as determined by test specimens (beams) fabricated in accordance with ASTM C192/C192M and tested in accordance with ASTM C78. Procedures given in ACI 211.1 shall be modified as necessary to accommodate flexural strength.

c. Proportioning Studies for Lightweight Aggregate Structural Concrete: Trial design batches, mixture proportioning studies, and testing requirements shall conform to the requirements specified in paragraph Proportioning Studies for Normal Weight Concrete, except as follows. Trial mixtures having proportions, consistencies and air content suitable for the work shall be made based on methodology described in ACI 211.2, using at least three different cement contents. Trial mixes shall be proportioned to produce air dry unit weight and concrete strengths specified in paragraph GENERAL REQUIREMENTS. Trial mixtures shall be proportioned for maximum permitted slump and air content. Test specimens and testing shall be as specified for normal weight concrete except that 28-day compressive strength and splitting tensile strength in accordance with ASTM C 496 shall be determined from test cylinders that have been air dried at 50 percent relative humidity for the last 21 days. Air dry unit weight shall be determined in accordance with ASTM C567 and shall be designed to be at least 2.0 pcf less than the maximum specified air dry unit weight in paragraph GENERAL REQUIREMENTS. Curves shall be plotted using these results showing the relationship between cement factor and strength and air dry unit weight. Normal weight fine aggregate may be substituted for part or all of the lightweight fine aggregate, provided the concrete meets the strength and unit weight. A correlation shall also be developed showing the ratio between air dry unit weight and fresh concrete unit weight for each mix.

d. Average Compressive Strength Required for Mixtures: The mixture proportions selected during mixture design studies shall produce a required average compressive strength (f'cr) exceeding the specified compressive strength (f'c) by the amount indicated below. This required average compressive strength, f'cr, will not be a required acceptance criteria during concrete production. However, whenever the daily average compressive strength at 28 days drops below f'cr during concrete production, or daily average 7-day strength drops below a strength correlated with the 28-day f'cr, the mixture shall be adjusted, as approved, to bring the daily average back up to f'cr. During production, the required f'cr shall be adjusted, as appropriate, based on the standard deviation being attained on the job.

1) Computations from Test Records: Where a concrete production facility has test records, a standard

deviation shall be established in accordance with the applicable provisions of ACI 214.3R. Test records from which a standard deviation is calculated shall represent materials, quality control procedures, and conditions similar to those expected; shall represent concrete produced to meet a specified strength or strengths (f'c) within 1,000 psi of that specified for proposed work; and shall consist of at least 30 consecutive tests. A strength test shall be the average of the strengths of two cylinders made from the same sample of concrete and tested at 28 days. Required average compressive strength f'cr used as the basis for selection of concrete proportions shall be the larger of the equations that follow using the standard deviation as determined above:

f'cr = f'c + 1.34S where units are in psi

f'cr = f'c + 2.33S - 500 where units are in psi

Where S = standard deviation

Where a concrete production facility does not have test records meeting the requirements above but does have a record based on 15 to 29 consecutive tests, a standard deviation shall be established as the product of the calculated standard deviation and a modification factor from the following table:

NUMBER OF TESTS	MODIFICATION FACTOR FOR STANDARD DEVIATION
15	1.16
20	1.08
25	1.03
30 or more	1.00

2) Computations without Previous Test Records: When a concrete production facility does not have sufficient field strength test records for calculation of the standard deviation, the required average strength f'cr shall be determined as follows:
   a). If the specified compressive strength f'c is less than 3,000 psi,
   f'cr = f'c + 1000 psi
   b). If the specified compressive strength f'c is 3,000 to 5,000 psi,
   f'cr = f'c + 1,200 psi
   c). If the specified compressive strength f'c is over 5,000 psi,
   f'cr = f'c + 1,400 psi

e. Average Flexural Strength Required for Mixtures: The mixture proportions selected during mixture design studies for flexural strength mixtures and the mixture used during concrete production shall be designed and adjusted during concrete production as approved, except that the overdesign for average flexural strength shall simply be 15 percent greater than the specified flexural strength at all times.

f. Mix Design for Bonded Topping for Heavy Duty Floors: The concrete mix design for bonded topping for heavy duty floors shall contain the greatest practical proportion of coarse aggregate within the specified proportion limits. The mix shall be designed to produce concrete having a 28-day strength of at least 5000 psi. Concrete for the topping shall consist of the following proportions, by weight:

1.00 part portland cement
1.15 to 1.25 parts fine aggregate
1.80 to 2.00 parts coarse aggregate

Maximum w/c shall be 0.33. The topping concrete shall not be air-entrained. The concrete shall be mixed so as to produce a mixture of the driest consistency possible to work with a sawing motion of the

strike-off and which can be floated and compacted as specified without producing water or excess cement at the surface. In no case shall slump exceed 1 inch as determined by ASTM C143/C143M.

7. Storage Of Materials: Cement and other cementitious materials shall be stored in weathertight buildings, bins, or silos which will exclude moisture and contaminants and keep each material completely separated. Aggregate stockpiles shall be arranged and used in a manner to avoid excessive segregation and to prevent contamination with other materials or with other sizes of aggregates. Aggregate shall not be stored directly on ground unless a sacrificial layer is left undisturbed. Reinforcing bars and accessories shall be stored above the ground on platforms, skids or other supports. Other materials shall be stored in such a manner as to avoid contamination and deterioration. Admixtures which have been in storage at the project site for longer than 6 months or which have been subjected to freezing shall not be used unless retested and proven to meet the specified requirements. Materials shall be capable of being accurately identified after bundles or containers are opened.
8. Government Assurance Inspection And Testing: Day-to day inspection and testing shall be the responsibility of the Contractor Quality Control (CQC) staff. However, representatives of the Government can and will inspect construction as considered appropriate and will monitor operations of the Contractor's CQC staff. Government inspection or testing will not relieve the Contractor of any of his CQC responsibilities.
   a. Materials: The Government will sample and test aggregates, cementitious materials, other materials, and concrete to determine compliance with the specifications as considered appropriate. The Contractor shall provide facilities and labor as may be necessary for procurement of representative test samples. Samples of aggregates will be obtained at the point of batching in accordance with ASTM D75. Other materials will be sampled from storage at the jobsite or from other locations as considered appropriate. Samples may be placed in storage for later testing when appropriate.
   b. Fresh Concrete: Fresh concrete will be sampled as delivered in accordance with ASTM C172 and tested in accordance with these specifications, as considered necessary.
   c. Hardened Concrete: Tests on hardened concrete will be performed by the Government when such tests are considered necessary.
   d. Inspection: Concrete operations may be tested and inspected by the Government as the project progresses. Failure to detect defective work or material will not prevent rejection later when a defect is discovered nor will it obligate the Government for final acceptance.
9. Contractor Quality Control/Verification: Perform work in conformance with Division 01- Quality Control and ACI 301.
   a. The Contractor shall maintain a documented Quality Control (QC) Program during the cast-in-place concreting operations covered by this section of specs. The QC Program shall include the following:
      1) Coordination, scheduling and monitoring of all sampling, testing and inspections required herein (whether the service is a part of the Contractor's QC Program or part of the Owner/Architect Acceptance/Verification operation).
      2) Evaluation and selection of qualified producers/suppliers/subcontractors and their conformance to the requirements of the Contract Documents.
      3) Preparation of appropriate procurement documents with adequate reference to the requirements of the Contract Documents.
      4) Scheduling and conducting installation and in-progress job conferences.
      5) Preparation, review, and submittal of CIP reinforced concrete shop drawings.
      6) Prequalification of proposed concrete materials and establishment of mix designs. Review and approve mix designs before submittals for approval.
      7) Conduct Quality Control tests and inspections herein designated as being the responsibility of the Contractor.
      8) Periodic monitoring and verification of producer/supplier/subcontractor quality control procedures.
      9) Provide verification of conformance for all materials furnished. The Contractor shall designate a responsible qualified person to receive ready-mixed concrete at the job site to verify each truck load for appropriate quality for the portion of the work being placed.

10) Make preplacement of concrete inspections: lines and grades, formwork, reinforcing steel, embedments, blockouts and embedded items.
11) Review formwork design, construction, shoring and reshoring procedures and assure conformance with design parameters and loading conditions.
12) Placement supervision: Pouring conditions, field tests of concrete, conveyance, placement and consolidation, finishing and curing.

b. Quality Verification Testing:
1) Testing services required for construction Quality Verification shall be as follows:
a). Pre qualification of proposed materials including: Course and Fine Aggregated, Cement, Water, Admixtures, Reinforcing and Prestressing Steel and establishment or review of concrete mix designs (ACI 301 Chapter 3, Proportioning).
b). NRMCA Certification or equivalent inspection of batch plant(s) and truck mixers before and during construction.
c). Other testing services needed as required to assure required Concrete Quality.

c. Quality Verification Inspections: Inspection of the cast-in-place, reinforced concrete as required by applicable local building code and by ACI 318, Building Code Chapter 1. The Independent Inspection Agency specified in Division 01 will perform the inspections of cast-in-place reinforced concrete.
1) Inspection to conform to the "ACI Manual of Concrete Inspection" and shall consist of the following services by the Project Special Inspector:
a). Make intensive observations and investigations during construction of the CIP reinforced concrete portions of the project to promote conformity to the intent of the Contract Documents. These services shall be performed during form construction, placement of reinforcement, mix design; and mixing, conveying, testing, placing, finishing, curing and protection of all concrete work specified herein.
(1) Review and approve batching and mixing facilities and operation.
(2) Review and approve concrete mix designs.
(3) Monitor and evaluate Testing Laboratory procedures in the testing of materials and verification of quality control in the production and delivery of concrete to the project.
(4) Observe forms and placement of reinforcing steel, embedded items, joints, etc. and verify same to be according to plans and specifications.
(5) Review concrete conveying and placing methods and equipment.
(6) Observe concrete placing, consolidation, finishing, curing, protection, repair, and/or patching.
(7) Keep a record of all inspections of the progress of the work, and of any pertinent facts relevant to this portion of the work.
b). Project Inspector's duties are not to be confused nor will they replace any of the Contractor's supervisory functions; nor will engineering inspection in any way relieve the Contractor of his complete responsibility of these supervisory functions. General Contractor is solely responsible for the direction and supervision of the entire construction operation, the performance of materials and labor, safety of working conditions, and the ultimate quality of the structure. The Project Inspector's responsibility is to make detailed observations while the work is in progress to provide a large measure of assurance to the Government and the Contractor that the concrete work is conforming to the intent of the Contract Documents. His/her role in no way serves as guarantor of the Contractor's work.

10. Testing Laboratory Services: Comply with general requirements of Division 01 and ACI 301, Chapter 16. The testing laboratory shall provide the following:
a. Review the Contractor's prequalification tests, and certifications for CIP Concrete Materials and evaluate for conformance to Contract Document requirements and advise Contracting Officer. (ACI 301, Chapter 16).
b. Procure random samples of the concrete as it is discharged from the mixer/truck at the jobsite and just prior to being deposited in the forms and conduct strength tests as specified in ACI 301, Chapter 16.

c. In addition to the requirements and duties in ACI 301, Chapter 16, the testing lab shall provide the following:
   1) Review and evaluate Concrete Mix Designs submitted by the Contractor before submittal for A/E Review.
   2) Review Manufacturer's reports and/or certification for each shipment of cement and reinforcing steel and/or conduct spot checks and laboratory tests of the materials as received for compliance with specifications.
   3) Inspect concrete batching, mixing, and delivery operations periodically or as directed.
   4) Sample (and test when directed) cement and aggregates and verify approved admixtures. Store samples in a protected place until authorize to dispose of them.
   5) Submit to the Concrete Producer, Contractor, and Contracting Officer during construction, the results of concrete tests. As a minimum include the following information:
      a). Weight of concrete - ASTM C138.
      b). Slump - ASTM C143
      c). Air content of freshly-mixed concrete by the pressure method, ASTM C231 or the volumetric method, ASTM C173 or ASTM C567 for lightweight concrete.
      d). Concrete temperature (at placement time).
      e). Air temperature (at placement time)
      f). Strength determined in accordance with ASTM C39.
   6) Other testing or inspection as required by the Government or Government's representative.

d. Periodic field and concrete plant inspections made by a competent representative of the Testing Laboratory during structural concreting operations including audit and spot check of the Producer's and/or Contractor's quality control procedures to assure proper and adequate control. When it appears that any material furnished fails to fulfill specification requirements, the Testing Laboratory is to report such deficiency immediately to the Government and Contractor and appropriately record it in his/her report.

e. Concrete reinforcement verification and/or testing: Receive and evaluate mill test certifications for conformance with contract document requirements. Perform quality tests if in the absence of identifiable mill test certifications the quality is in doubt at the cost of the Contractor.

Products:

1. Cementitious Materials: Cementitious Materials shall be portland cement, ASTM C150 - Type I or II unless otherwise approved. ACI 301, Section 2.1. Use of cementitious materials in concrete which will have surfaces exposed in the completed structure shall be restricted so there is no change in color, source, or type of cementitious material.
   a. The Contractor shall assume responsibility for verification of the quality and soundness of cement. Cement is to be of one type and from the same mill; it is to be of uniform color for all concrete with exposed architectural concrete finishes.
   b. Where the identity of the cement can be maintained, the Manufacturer's Mill Test Reports may be accepted as certification of pretesting of cement to be used. Where the delivery methods make it impractical to pretest and/or maintain proper identity of the tested cement, pretesting may be waived; in which case, samples are to be taken of all shipments of cement used and retained by the Testing Lab for a period of one year. Such samples are to be tested when directed to verify conformance.

2. Aggregates: Aggregates shall conform to the following. ACI 301, Chapter 2, and ACI 221R.
   a. Normal-weight concrete - ASTM C33
   b. All concrete exposed to the weather shall conform to the limits of deleterious substances and physical properties of Table 3, ASTM C33.
   c. Local aggregates: Local aggregates not complying with ASTM C33 but which have been shown by special test or actual service to produce concrete of adequate strength and durability may be used when acceptable to the A/E.
   d. Maximum size of coarse aggregates: ACI 301, Chapter 4.
   e. Abrasive aggregates non-slip finishes: Fused aluminum oxide grits, or crushed emery, as abrasive for

non-slip finish with emery aggregate containing not less than 40% aluminum oxide and not less than 25% ferric oxide. Use material that is factory-graded, packaged, rust-proof, non-glazing, and unaffected by freezing, moisture, and cleaning materials.

f. Lightweight Aggregate: Lightweight fine and coarse aggregate shall conform to the quality and gradation requirements of ASTM C330. Lightweight aggregate shall be prewetted in accordance with the Manufacturer's instructions unless otherwise specified. For pumped concrete, prewetting shall be sufficient to ensure that slump loss through the pump line does not exceed 4 inches.

3. Chemical Admixtures: Chemical admixtures, when required or permitted, shall conform to the appropriate specification listed. Admixtures shall be furnished in liquid form and of suitable concentration for easy, accurate control of dispensing. Refer to ACI 301, Sections 2.2 and 3.7; and ACI 212.2R. The following admixtures are permitted or are required as specified herein and are to be used in strict accordance with the Manufacturer's specifications or recommendations. Admixtures containing calcium chloride, thiocyanates or admixtures containing more than 0.05% chloride ions are not permitted.
   a. Air-Entraining Admixture: ASTM C260 shall consistently entrain the air content in the specified ranges under field conditions and achieve the specified air content in all permanently exposed exterior concrete. (See ACI 301, Chapter 3).
   b. Accelerating Admixture: ASTM C494/C494M, Type C or E, except that calcium chloride or admixtures containing calcium chloride shall not be used all Accelerating Admixtures shall have long-term test results showing non-rusting on metal deck and reinforcing steel..
   c. Water-Reducing or Retarding Admixture: Water-reducing admixture: ASTM C494/C494M, Type A, containing not more chloride ions than allowed in paragraph 2.3 above. Water-reducing/retarding admixtures: ASTM C494, Type D containing not more than 1% chloride ions.
   d. High-Range Water Reducer: ASTM C494/C494M, Type F or G, super plasticizers containing 0.05% maximum chloride ions may be used with low slump (3 inch maximum) concrete to produce flowable concrete (up to 8 inch slump) with early strength gain and 28-day strengths equal to reference concrete. HRWR admixture may be used providing not more than 60 minutes is allowed from addition of admixture to final placement of concrete. HRWR admixture shall be used to adjust the workability of onsite concrete as needed.
      1) Where more than 30 minutes is required between the addition of admixtures to final placement of the concrete, a combination of water-reducing, set controlling admixtures (ASTM C494, Types A, D, & E) may be used.
   e. Fly Ash: ASTM C618: The use of a quality fly ash will be permitted as a cement-reducing admixture (maximum 20%). The fly ash shall be from a single source and meet all of the requirements of ASTM C618, Class C or Class F, with the following special requirements: The loss on ignition in Table 1 shall not exceed 3%. Compliance to Table 1A shall apply. The amount retained on the 325 sieve in Table 2 shall not exceed 20%. The chemical analysis of the fly ash shall be reported in accordance with ASTM C114. Quality assurance testing and reports for a minimum of six (6) months shall be submitted by the fly ash supplier. The option to use fly ash must be approved prior to use.
   f. Certification: Certification of the above requirements is required from the admixture manufacturer prior to mix design review and approval by the Contracting Officer. Use of admixtures, other than listed above will be permitted only when approved prior to bidding.
   g. Compatibility: Supplier shall certify the compatibility of all proposed admixtures. Certification shall accompany submittal of mix design.

4. Curing And Protection Materials: ACI 301, Chapter 12
   a. Impervious-Sheet: Impervious-sheet materials shall conform to ASTM C171, type optional, except, that polyethylene sheet shall not be used.
   b. Membrane-Forming Compound: Membrane-Forming curing compound shall conform to ASTM C309, Type 1-D or 2, except that only a styrene acrylate or chlorinated rubber compound meeting Class B requirements shall be used for surfaces that are to be painted or are to receive bituminous roofing, or waterproofing, or floors that are to receive adhesive applications of resilient flooring. The curing

compound selected shall be compatible with any subsequent paint, roofing, waterproofing, or flooring specified. Nonpigmented compound shall contain a fugitive dye, and shall have the reflective requirements in ASTM C 309 waived.

c. Burlap and Cotton Mat: Burlap and cotton mat used for curing shall conform to AASHTO M 182.

5. Water: Water for mixing and curing shall be fresh, clean, potable, and free of injurious amounts of oil, acid, salt, or alkali, except that non-potable water may be used if it meets the requirements of COE CRD-C 400.

6. Grout And Mortars
   a. Cement grout (ASTM C476-80 Grout for Reinf. and Non-Reinf. Masonry), dry-pack grout (ASTM C387, Dry packaged Mixtures), or:
      1) Mix at the site, in composition of one volume of portland cement to 2 1/2 volumes of fine aggregate.
      2) Mix the materials dry; then add sufficient water to make the mixture flow under its own weight.
      3) When grout is used as dry-pack concrete, add sufficient water to make a stiff mixture which can be molded into a sphere.
   b. High strength non-shrink grout: Corps of Engineers Specifications, (CRD-D-621-83), prepackaged factory-premixed grout, Type B (metallic) or D (non-metallic). It shall be tested at a fluid consistency (flow cone) of 25+ 5 seconds. Grout shall attain 7000 psi compressive strength at 28 days and shall not bleed. Expansion shall not be caused by gas liberation. Include Manufacturer's certification that materials meet specification requirements.
      1) Submittals: The following laboratory test results shall be submitted to show compliance with the requirements of this specification:
         a). Initial setting time: 8 hours maximum
         b). Vertical shrinkage: 0
      2) Field Service: The Contractor, when required, shall provide a qualified concrete technician employed by the Grout Manufacturer to assist in the initial grouting operations.

7. Nonslip Surfacing Material: Nonslip surfacing material shall consist of 55 percent, minimum, aluminum oxide or silicon-dioxide abrasive ceramically bonded together to form a homogeneous material sufficiently porous to provide a good bond with portland cement paste; or factory-graded emery aggregate consisting of not less than 45 percent aluminum oxide and 25 percent ferric oxide. The aggregate shall be well graded from particles retained on the No. 30 sieve to particles passing the No. 8 sieve.

8. Latex Bonding Agent: Latex agents for bonding fresh to hardened concrete shall conform to ASTM C1059.

9. Epoxy Resin: Epoxy resins for use in repairs shall conform to ASTM C881, Type V, Grade 2. Class as appropriate to the existing ambient and surface temperatures. ACI 301, Chapter 9.

10. Embedded Items: Embedded items shall be of the size and type indicated or as needed for the application. Dovetail slots shall be galvanized steel. Hangers for suspended ceilings shall be as specified in Section 09510 ACOUSTICAL CEILINGS. Inserts for shelf angles and bolt hangers shall be of malleable iron or cast or wrought steel.

11. Floor Hardener: Floor hardener shall be a colorless aqueous solution containing zinc silicofluoride, magnesium silicofluoride, or sodium silicofluoride. These silicofluorides can be used individually or in combination. Proprietary hardeners may be used if approved in writing by the Contracting Officer.

12. Perimeter Insulation: Perimeter insulation shall be polystyrene conforming to ASTM C578, Type II; polyurethane conforming to ASTM C591, Type II; or cellular glass conforming to ASTM C552, Type I or IV. The Contractor shall comply with EPA requirements.

13. Vapor Barrier: Vapor barrier shall be polyethylene sheeting with a minimum thickness of 8 mils or other

equivalent material having a vapor permeance rating not exceeding 0.5 perms as determined in accordance with ASTM E96. Use only material which are resistant to decay when coated and tested in accordance with ASTM E154.

14. Joint Materials: ACI 301, Chapter 2
    a. Construction Joints: ACI 301, Section 2.2.5
        1) Locate and install construction joints, which are not shown on drawings, so as not to impair strength and appearance of the structure, as acceptable to the A/E.
        2) Provide keyways at least 1 1/2 inches deep in construction joints, unless shown otherwise on plans, in walls, slabs and between walls and footings.
        3) Place construction joints perpendicular to the main reinforcement. Continue reinforcement across construction joints.
    b. Expansion/Contraction Joint Filler: ACI 301, Section 2.2.1.4
        1) Install premolded expansion joint filler 1 inch thick unless otherwise indicated of the following types:
            a) Asphalt - impregnated fiberboard (ASTM D1751, for interior work)
            b). Self expanding corkboard (ASTM D1752, Type III) for exterior work.
            c). Fiberboard/GlassFiber - (ASTM D994)
            d). Polyvinyl/polystyrene (ASTM D1752)
            e). Sponge Rubber (ASTM D1752, Type 1)
        2) Hot-poured type shall conform to Federal Specification SS-S-1401.
    c. Control Joints In Slab-On-Ground: Construct control joints in slab-on-ground to form panels of patterns as shown (10 feet o.c. maximum). Use Zipstrip, Greenstreak or equal inserts 1/8 to 1/4 inch wide x 1/4 of slab depth, unless otherwise indicated. Form control joints by inserting premolded plastic, hardboard or fiberboard strip into fresh concrete until top surface of strip is flush with slab surface. Tool slab edges round on each side of insert. After concrete has cured, remove inserts and clean groove of loose debris. Control joints may be formed by saw cuts made as soon as possible after slab finishing as may be safely done without dislodging aggregate. Submit sawing schedule to the A/E for review.
    d. Isolation Joint Fillers: Fillers shall consist of 1/8 inch width strips of neoprene; synthetic rubber, or approved substitute, extending the full depth of the slab.
    e. Water Stops: ACI 301, Section 2.2.3.5 - Splice, seal, and install water stop for watertight joint as recommended by manufacturer and designed to allow for the anticipated movement at the joint.
        1) PVC - Corps of Engineers, CRD-C572, minimum 1700 psi tensile strength, minus 51 deg F to plus 174 deg F working temperature range; flat profile; corrugated flaps, ribbed flaps on one side only, large center bulb, or split center bulb of the sizes and profile shown on drawings.
        2) Rubber - Corps of Engineers, CRD-C513
        3) Neoprene - Corps of Engineers, continuous maximum lengths; 60 Shore A hardness; 2000 psi minimum tensile strength; recessed from joint; vertical turns; lubricant/adhesive; black color.
        4) Copper - Minimum 16 ounce copper; temper; maximum possible length.

15. Repair Of Surface Defects: Aci 301, 5, paragraph 3.7.

16. Proportioning: Aci 301, Section 4.2.3
    a. Concrete types and strengths: See General and Specific Notes on structural drawings.
        1. Weights: All concrete shall be normal-weight (N.W.) concrete unless otherwise designated on the structural drawings.
        2. Durability:
            A. All concrete exposed to potentially destructive weathering, such as freezing and thawing, or to deicer chemicals is to be air-entrained, (ACI 301 Table 4.2.2.4) water-cement ratio less than 0.45 by weight, 10 sacks cement per cubic yard minimum, 4 inch maximum slump. All concrete subject to aggressive chemical exposure in designated areas shall conform to the recommendations of ACI 201, Chapter 2.

B. Water-cement ratio: For concrete subject to freezing and thawing or deicer chemicals, the water-cement ratio shall not exceed 0.50 by weight including any water added to meet specified slump in accordance with the requirements of ASTM C94 unless otherwise noted.

3. Slump: ACI 301, 4.2.2.2
   A. 4 inch maximum for consolidation by vibration
   B. 5 inch maximum for consolidation by other methods
   C. 8 inch maximum for flowable concrete. Concrete containing HRWR admixture (super plasticizer): 3 inch maximum before addition of HRWR.
   D. Where field conditions require slump to exceed that specified above, the increase slump shall be obtained by the use of a superplasticizer only, and the Contractor shall obtain written approval from the Contracting Officer who may require an adjustment to the mix.
4. Selection of proportions (mix design): ACI 301, Section 4.2.3 and ACI 211.1-81.
5. Mix Designs:
   A. Mixes for each type and strength of concrete by either laboratory trial batch or field experience methods as specified in ACI 301, 4.2.3.2. The testing facility shall not be the same as used for field quality control testing and inspection unless otherwise acceptable to Contracting Officer.
   B. Submit written testing laboratory reports to the testing laboratory for review for each proposed mix for each class of concrete at least 15 days prior to start of work. Do not begin concrete production until mixes have been reviewed and verified by the Testing Laboratory to be in conformance with these Contracting Officer. Include the following information for each concrete mix design:
      (1) Method used to determine the proposed mix design.
      (2) Gradation of fine and coarse aggregates
      (3) Proportions of all ingredients including all admixtures added either at the time of batching or at the job site.
      (4) Water-cement ratio
      (5) Slump, ASTM C143
      (6) Certification of the chloride content of individual admixtures and of the mixes as proposed.
      (7) Air Content: ASTM C173 (Volumetric Method)
      (8) Unit weight of concrete, ASTM C138
      (9) Strength at 4, 7, and 28 days, ASTM C39
      (10) Method of recording batch proportions
      (11) Substantiating test reports which have been reviewed and approved by the independent testing lab.
      (12) Maximum allowable field dosages of water and admixtures which meet mix design criteria and allow Contractor to achieve proper field results.

DIVISION 4 - MASONRY

SECTION 04200 - UNIT MASONRY SYSTEM

Scope: 1. Provide unit masonry for walls and partitions:
   a. Concrete masonry bearing walls and non-bearing partitions.
   b. Repair and remodeling at existing construction.

References: 1. The publications referenced above (or below) establish minimum requirements for materials, systems and execution which may be specified in this Section.

ACI INTERNATIONAL (ACI)

ACI SP-66 ACI Detailing Manual

ACI 530	Building Code Requirements for Masonry Structures

AMERICAN SOCIETY FOR TESTING AND MATERIALS (ASTM)

ASTM A82	Steel Wire, Plain, for Concrete Reinforcement
ASTM A153/A153M	Zinc Coating (Hot-Dip) on Iron and Steel Hardware
ASTM A615/A615M	Deformed and Plain Billet-Steel Bars for Concrete Reinforcement
ASTM C90	Loadbearing Concrete Masonry Units
ASTM C91	Masonry Cement
ASTM C129	Nonloadbearing Concrete Masonry Units
ASTM C140	Sampling and Testing Concrete Masonry Units
ASTM C270	Mortar for Unit Masonry
ASTM C476	Grout for Masonry
ASTM C494/C494M	Chemical Admixtures for Concrete
ASTM C578	Rigid, Cellular Polystyrene Thermal Insulation
ASTM C641	Staining Materials in Lightweight Concrete Aggregates
ASTM C744	Prefaced Concrete and Calcium Silicate Masonry Units
ASTM C780	Preconstruction and Construction Evaluation of Mortars for Plain and Reinforced Unit Masonry
ASTM C1019	Sampling and Testing Grout
ASTM C1072	Measurement of Masonry Flexural Bond Strength
ASTM D2000	Rubber Products in Automotive Applications
ASTM D2240	Rubber Property - Durometer Hardness
ASTM D2287	Nonrigid Vinyl Chloride Polymer and Copolymer Molding and Extrusion Compounds
ASTM E119	Fire Tests of Building Construction and Materials
ASTM E447	Compressive Strength of Masonry Prisms

General:

1. Submittals: The following shall be submitted to the Engineer of Record (unless noted otherwise) for approval in accordance with Section 01331 SUBMITTALS:
   a. Shop Drawings: Drawings including plans, elevations, and details of wall reinforcement; details of reinforcing bars at corners and wall intersections; offsets; tops, bottoms, and ends of walls; control and expansion joints; and wall openings. Bar splice locations shall be shown. Drawings shall be provided showing the location and layout of glass block units. If the Contractor opts to furnish inch-pound CMU products, drawings showing elevation of walls exposed to view and indicating the location of all cut CMU products shall be submitted for approval. Bent bars shall be identified on a bending diagram and shall be referenced and located on the drawings. Wall dimensions, bar clearances, and wall openings greater than one masonry unit in area shall be shown. No approval will be given to the shop drawings until the Contractor certifies that all openings, including those for mechanical and electrical service, are shown. If, during construction, additional masonry openings are required, the approved shop drawings shall be resubmitted with the additional openings shown along with the proposed changes. Location of these additional openings shall be clearly highlighted. The minimum scale for wall elevations shall be 1/4 inch per foot. Reinforcement bending details shall conform to the requirements of ACI SP-66.
   b. Product Data
      1) Manufacturer’s descriptive data for the following:
         a). Concrete Masonry Units
      2) Cold Weather Installation; Cold weather construction procedures.
   c. Samples
      1) Color samples of three stretcher units and one unit for each type of special shape. Units shall show the full range of color and texture.
         a). Concrete Masonry Units

2) Anchors, Ties, and Bar Positioners; Two of each type used.
3) Expansion-Joint Material; One piece of each type used.
4) Joint Reinforcement; One piece of each type used, including corner and wall intersection pieces, showing at least two cross wires.

d. Test Reports
1) Test reports from an approved independent laboratory. Test reports on a previously tested material shall be certified as the same as that proposed for use in this project.
a) Efflorescence Test
b) Field Testing of Mortar
c) Field Testing of Grout
d) Prism tests
e) Masonry Cement
f) Fire-rated CMU
2) Special Inspection; Copies of masonry inspector reports.

e. Certificates
1) Certificates of compliance stating that the materials meet the specified requirements.
a) Concrete Masonry Units (CMU)
b) Control Joint Keys
c) Anchors, Ties, and Bar Positioners
d) Expansion-Joint Materials
e) Joint Reinforcement
f) Reinforcing Steel Bars and Rods
g) Masonry Cement
h) Mortar Coloring
i) Mortar Admixtures
j) Grout Admixtures

Products: 1. General Requirements: The source of materials which will affect the appearance of the finished work shall not be changed after the work has started except with Governments approval.

2. CONCRETE MASONRY UNITS (CMU): Hollow and solid concrete masonry units shall conform to ASTM C 90. Cement shall have a low alkali content and be of one brand.

a. Aggregates: Lightweight aggregates and blends of lightweight and heavier aggregates in proportions used in producing the units, shall comply with the following requirements when tested for stain-producing iron compounds in accordance with ASTM C 641: by visual classification method, the iron stain deposited on the filter paper shall not exceed the "light stain" classification.

b. Kinds and Shapes: Units shall be modular in size and shall include closer, jamb, header, lintel, and bond beam units and special shapes and sizes to complete the work as indicated. In exposed interior masonry surfaces, units having a bullnose shall be used for vertical external corners except at door, window, and louver jambs. Radius of the bullnose shall be 1 inch. Units used in exposed masonry surfaces in any one building shall have a uniform fine to medium texture and a uniform color.

c. Fire-Rated CMU: Concrete masonry units used in fire-rated construction shown on the drawings shall be of minimum equivalent thickness for the fire rating indicated and the corresponding type of aggregates indicated in TABLE I. Units containing more than one of the aggregates listed in TABLE I will be rated on the aggregate requiring the greater minimum equivalent thickness to produce the required fire rating.

TABLE I: FIRE-RATED CONCRETE MASONRY UNITS
See note (a) below
Minimum equivalent thickness in inches for fire rating of:

Aggregate Type	4 hours	3 hours	2 hours

Pumice	4.7	4.0	3.0
Expanded slag	5.0	4.2	3.3
Expanded clay, shale, or slate	5.7	4.8	3.7
Limestone, scoria, cinders or unexpanded slag	5.9	5.0	4.0
Calcareous gravel	6.2	5.3	4.2
Siliceous gravel	6.7	5.7	4.5

Note: (a) Minimum equivalent thickness shall equal net volume as determined in conformance with ASTM C 140 divided by the product of the actual length and height of the face shell of the unit in inches. Where walls are to receive plaster or be faced with brick, or otherwise form an assembly; the thickness of plaster or brick or other material in the assembly will be included in determining the equivalent thickness.

5. Mortar: Mortar shall be Type S, N, or M as indicated on the Structural drawings in accordance with the proportion specification of ASTM C 270 except Type S cement-lime mortar proportions shall be 1 part cement, 1/2 part lime and 4-1/2 parts aggregate; Type N cement-lime mortar proportions shall be 1 part cement, 1 part lime and 6 parts aggregate; when masonry cement ASTM C 91 is used the maximum air content shall be limited to 12 percent and performance equal to cement-lime mortar shall be verified. Verification of masonry cement performance shall be based on ASTM C 780 and ASTM C 1072. Mortar for prefaced concrete masonry unit wainscots shall contain aggregates with 100 percent passing the 2.36 mm No. 8 sieve and 95 percent passing the No. 16 sieve. Pointing mortar in showers and kitchens shall contain ammonium stearate, or aluminum tri-stearate, or calcium stearate in an amount equal to 3 percent by weight of cement used. Cement shall have a low alkali content and be of one brand. Aggregates shall be from one source.
   a. Mortar Admixtures: In cold weather, a non-chloride based accelerating admixture may be used subject to approval. Accelerating admixture shall be non-corrosive, shall contain less than 0.2 percent chlorides, and shall conform to ASTM C 494/C 494M, Type C.
   b. Mortar Coloring: Mortar coloring shall be added to the mortar used for exposed masonry and brick surfaces to produce a uniform color matching the adjacent masonry and face brick. Mortar coloring shall not exceed 3 percent of the weight of cement for carbon black and ten percent of the weight of cement for all other pigments. Mortar coloring shall be chemically inert, of finely ground limeproof pigment, and furnished in accurately pre-measured and packaged units that can be added to a measured amount of cement.

6. Grout: Grout shall conform to ASTM C 476. Cement used in grout shall have a low alkali content. Grout slump shall be between 8 and 10 inches. Grout shall be used subject to the limitations of Table III. Proportions shall not be changed and materials with different physical or chemical characteristics shall not be used in grout for the work unless additional evidence is furnished that the grout meets the specified requirements.
   a. Grout Admixtures: In cold weather, a non-chloride based accelerating admixture may be used subject to approval. Accelerating admixture shall be non-corrosive, shall contain less than 0.2 percent chlorides, and shall conform to ASTM C 494/C 494M, Type C.
   b. Grout Barriers: Grout barriers for vertical cores shall consist of fine mesh wire, fiberglass, or expanded metal.

7. Anchors, Ties, And Bar Positioners: Anchors and ties shall be fabricated without drips or crimps and shall be zinc-coated in accordance with ASTM A 153/A 153M, Class B-2. Steel wire used for anchors and ties shall be fabricated from steel wire conforming to ASTM A 82. Anchors and ties shall be sized to provide a minimum of 5/8 inch mortar cover from either face.
   a. Wire Mesh Ties: Wire mesh for tying 4 inch thick concrete masonry unit partitions to other intersecting masonry partitions shall be 1/2 inch mesh of minimum 16 gauge steel wire. Minimum lengths shall be not less than 12 inches.
   b. Wall Ties: Wall ties shall be rectangular-shaped or Z-shaped fabricated of 3/16 inch diameter zinc-coated steel wire. Rectangular wall ties shall be no less than 4 inches wide. Wall ties may also be of a continuous type conforming to paragraph JOINT REINFORCEMENT. Adjustable type wall ties, if approved for use, shall consist of two essentially U-shaped elements fabricated of 3/16 inch diameter zinc-coated steel wire. Adjustable ties shall be of the double pintle to eye type and shall allow a maximum of 1/2 inch eccentricity between each element of the tie. Play between pintle and eye opening shall be not more than 1/16 inch. The pintle and eye elements shall be formed so that both can be in the same plane.
   c. Dovetail Anchors: Dovetail anchors shall be of the flexible wire type, 3/16 inch diameter zinc-coated steel wire, triangular shaped, and attached to a 12 gauge or heavier steel dovetail section. These anchors shall be used for anchorage of veneer wythes or composite-wall facings extending over the face of concrete columns, beams, or walls. Cells within vertical planes of these anchors shall be filled solid with grout for full height of walls or partitions, or solid units may be used. Dovetail slots are specified in Section 03300 CAST-IN-PLACE STRUCTURAL CONCRETE.
   d. Adjustable Anchors: Adjustable anchors shall be 3/16 inch diameter steel wire, triangular-shaped. Anchors attached to steel shall be 5/16 inch diameter steel bars placed to provide 1/16 inch play between flexible anchors and structural steel members. Spacers shall be welded to rods and columns. Equivalent welded-on steel anchor rods or shapes standard with the flexible-anchor manufacturer may be furnished when approved. Welds shall be cleaned and given one coat of zinc-rich touch up paint.
   e. Bar Positioners: Bar positioners, used to prevent displacement of reinforcing bars during the course of construction, shall be factory fabricated from 9 gauge steel wire or equivalent, and coated with a hot-dip galvanized finish. Not more than one wire shall cross the cell.

8. Joint Reinforcement: Joint reinforcement shall be factory fabricated from steel wire conforming to ASTM A82, welded construction. Tack welding will not be acceptable in reinforcement used for wall ties. Wire shall have zinc coating conforming to ASTM A153/A153M, Class B-2. All wires shall be a minimum of 4 gauge. Reinforcement shall be ladder type design, having one longitudinal wire in the mortar bed of each face shell for hollow units and one wire for solid units. Joint reinforcement shall be placed a minimum of 5/8 inch cover from either face. The distance between crosswires shall not exceed 16 inches. Joint reinforcement for straight runs shall be furnished in flat sections not less than 3 m 10 feet long. Joint reinforcement shall be provided with factory formed corners and intersections. If approved for use, joint reinforcement may be furnished with adjustable wall tie features.

9. Reinforcing Steel Bars And Rods: Reinforcing steel bars and rods shall conform to ASTM A615/A615M, Grade 60.

10. Control Joint Keys: Control joint keys shall be a factory fabricated solid section of natural or synthetic rubber (or combination thereof) conforming to ASTM D2000 or polyvinyl chloride conforming to ASTM D2287. The material shall be resistant to oils and solvents. The control joint key shall be provided with a solid shear section not less than 5/8 inch thick and 3/8 inch thick flanges, with a tolerance of plus or minus 1/16 inch. The control joint key shall fit neatly, but without forcing, in masonry unit jamb sash grooves. The control joint key shall be flexible at a temperature of minus 30 degrees F after five hours exposure, and shall have a durometer hardness of not less than 70 when tested in accordance with ASTM D2240.

11. Expansion-Joint Materials: Backer rod and sealant shall be adequate to accommodate joint compression equal to 50 percent of the width of the joint. The backer rod shall be compressible rod stock of polyethylene foam, polyurethane foam, butyl rubber foam, or other flexible, nonabsorptive material as recommended by the sealant manufacturer. Sealant shall conform to Section 07900 JOINT SEALING.

12. Flashing: Flashing shall be as specified in Section 07600 SHEET METALWORK, GENERAL.

13. Weep Hole Ventilators: Weephole ventilators shall be prefabricated aluminum grill type vents designed to prevent insect entry with maximum air entry. Ventilators shall be sized to match modular construction with a standard 3/8-inch mortar joint.

DIVISION 5 - METALS

SECTION 05120 - STRUCTURAL STEEL

Scope:

1. Provide structural steel for building construction including sub-framing units which are part of the general framing system. Include anchors, bases, bearing plates, bracing, lintels when part of structural framing, and detail fittings.

2. Modify existing structural steel systems and components to accommodate remodeling and new work.

References:

1. The publications referenced above (or below) establish minimum requirements for materials, systems and execution which may be specified in this Section.

AMERICAN INSTITUTE OF STEEL CONSTRUCTION (AISC)

AISC ASD Manual	Manual of Steel Construction Allowable Stress Design
AISC ASD/LRFD Vol II	Manual of Steel Construction Vol II: Connections
AISC Design Guide No. 10	Erection Bracing of Low-Rise Structural Steel Frames
AISC FCD	Quality Certification Program
AISC LRFD Vol I	Manual of Steel Construction Load & Resistance Factor Design, Vol I: Structural Members, Specifications & Codes
AISC LRFD Vol II	Manual of Steel Construction Load & Resistance Factor Design, Vol II: Structural Members, Specifications & Codes
AISC Pub No. S303	Code of Standard Practice for Steel Buildings and Bridges
AISC Pub No. S341	Seismic Provisions for Structural Steel Buildings
AISC Pub No. M013	Detailing for Steel Construction
AISC Pub No. S323	Quality Criteria and Inspection Standards

AMERICAN INSTITUTE FOR HOLLOW STRUCTURAL SECTIONS-STRUCTURAL STEEL TUBING; (HSS)

AMERICAN SOCIETY FOR TESTING AND MATERIALS (ASTM)

ASTM A242/A242M	High-Strength Low-Alloy Structural Steel
ASTM A307	Carbon Steel Bolts and Studs
ASTM A325	Structural Bolts, Steel, Heat Treated
ASTM A325M	High-Strength Bolts for Structural Steel Joints (Metric)
ASTM A36/A36M	Carbon Structural Steel
ASTM A490	Heat-Treated Steel Structural Bolts, 150 ksi Minimum Tensile Strength
ASTM A490M	High-Strength Steel Bolts, Classes 10.9 and 10.9.3, for Structural Steel Joints (Metric)

ASTM A500	Cold-Formed Welded and Seamless Carbon Steel Structural Tubing in Rounds and Shapes
ASTM A501	Hot-Formed Welded and Seamless Carbon Steel Structural Tubing
ASTM A502	Steel Structural Rivets
ASTM A514/A514M	High-Yield-Strength, Quenched and Tempered Alloy Steel Plate, Suitable for Welding
ASTM A529/A529M	High-Strength Carbon-Manganese Steel of Structural Quality
ASTM A53/A53M	Pipe, Steel, Black and Hot-Dipped, Zinc-Coated, Welded and Seamless
ASTM A563	Carbon and Alloy Steel Nuts
ASTM A563M	Carbon and Alloy Steel Nuts (Metric)
ASTM A572/A572M	High-Strength Low-Alloy Columbium-Vanadium Structural Steel
ASTM A588/A588M	High-Strength Low-Alloy Structural Steel with 50 ksi (345 MPa) Minimum Yield Point to 4 in. (100 mm) Thick
ASTM A6/A6M	General Requirements for Rolled Structural Steel Bars, Plates, Shapes, and Sheet Piling
ASTM A618	Hot-Formed Welded and Seamless High-Strength Low-Alloy Structural Tubing
ASTM A709/A709M	Carbon and High-Strength Low-Alloy Structural Steel Shapes, Plates, and Bars and Quenched-and-Tempered Alloy Structural Steel Plates for Bridges
ASTM A852/A852M	Quenched and Tempered Low-Alloy Structural Steel Plate with 70 ksi (485 MPa) Minimum Yield Strength to 4 in. (100 mm) Thick
ASTM A992/A992M	Steel for Structural Shapes For Use in Building Framing
ASTM F 1554	Anchor Bolts, Steel, 36, 55, and 105-ksi Yield Strength.
ASTM F436	Hardened Steel Washers
ASTM F436M	Hardened Steel Washers (Metric)
ASTM F844	Washers, Steel, Plain (Flat), Unhardened for General Use
ASTM F959	Compressible-Washer-Type Direct Tension Indicators for Use with Structural Fasteners
ASTM F959M	Compressible-Washer-Type Direct Tension Indicators for Use with Structural Fasteners (Metric)

AMERICAN WELDING SOCIETY (AWS)

AWS A2.4	Standard Symbols for Welding, Brazing and Nondestructive Examination
AWS B1.10-86	Guide for the Non-destructive Inspection of Welds
AWS D1.1	Structural Welding Code - Steel
AWS QC1-86	Guide to "Standard for Qualification and Certification of Welding Inspectors"
AWS 2nd Edition, WI-80	Welding Inspection

ASME INTERNATIONAL (ASME)

ASME B18.21.1	Lock Washers (Inch Series)
ASME B46.1	Surface Texture (Surface Roughness, Waviness, and Lay)

THE SOCIETY FOR PROTECTIVE COATINGS (SSPC)

SSPC Paint 25	Red Iron Oxide, Zinc Oxide, Raw Linseed Oil and Alkyd Primer (Without Lead and Chromate Pigments)

INDUSTRIAL FASTENERS INSTITUTE (IFI)

IFI	Handbook for Bolt, Nut and Rivet Standards

AMERICAN SOCIETY FOR NON-DESTRUCTIVE TESTING (ASNT)

ASNT	Recommended Practice SNT-TC-1A

AMERICAN COUNCIL OF INDEPENDENT LABORATORIES INC. (ACIL)

ACIL	Quality Control System, Requirements for a Testing and Inspection Laboratory.
ACIL	Scope of Service, Materials, Engineering Testing and Inspections.

General: . General Requirements: Structural steel fabrication and erection shall be performed by an organization experienced in structural steel work of equivalent magnitude. The Contractor shall be responsible for correctness of detailing, fabrication, and for the correct fitting of structural members. Connections, for any part of the structure not shown on the contract drawings, shall be considered simple shear connections and shall be designed and detailed in accordance with pertinent provisions of AISC ASD Manual and AISC LRFD Vol II. Substitution of sections or modification of connection details will not be accepted unless approved by the Engineer of Record. AISC ASD Manual and AISC ASD/LRFD Vol II or AISC LRFD Vol I and AISC LRFD Vol II shall govern the work. Welding shall be in accordance with AWS D1.1 or paragraph WELDING. High-strength bolting shall be in accordance with AISC ASD Manual or AISC LRFD Vol I.

a. Steel fabricator shall design connections not detailed on the contract drawings under direct supervision of a Professional Structural Engineer experienced in the design of this work and licensed in the state where the Project is located.
b. General Requirements: Conform to general requirements for Quality Control and Assurance covered in Division 01 and specific requirements as outlined in the following AISC documents:
   1) "Code of Standard Practice for Steel Buildings and Bridges", AISC-S303, Section 8 - Quality Control.
   2) "Specifications for Steel Buildings, with Commentary, AISC-ASD Manual, AISC-S335, Ch. M, Fabrications, Erection and Quality Control, LRFD Spec., Ch. M, including "Commentary" and supplements thereto as issued.
   3) Maintain a copy of each document on site.
c. Quality Control Criteria: The Quality Criteria and Inspection Standards for the preparation of materials, fitting and fastening, dimensional tolerances, surface preparation and painting, non-destructive examination and special fabrication problems shall conform to the AISC recommendations contained in Publication "Quality Criteria and Inspection Standards" (S323). Mill material camber, flatness, straightness, sweep, and cross section are established by ASTM A6. The Fabricator is allowed to use controlled heating, mechanical straightening, or a combination of both methods, consistent with the manufacturer's recommendations, to adjust for conformance.
d. Quality Assurance: Both the Fabricator and Erector shall maintain a Quality Assurance program conforming to AISC-S303 Code of Standard Practice, Section 8, and AISC Specification for Structural Steel Buildings, Section M5, to assure that all of the work is performed in accordance with the contract documents. It shall be the responsibility of the Contractor to maintain control of the quality of the materials and workmanship, and conformance to the project Specifications. Materials and fabrication procedures are subject to inspections and tests in mill, shop, and field, conducted by a qualified inspection agency. Such inspections and tests will not relieve Contractor of responsibility for providing materials and fabrication procedures in compliance with specified requirements.
e. Material Certification: The Fabricator shall provide an affidavit stating that the structural steel furnished meets the requirements of this specification. Certified mill test reports or certified reports of tests made by the Fabricator or a testing laboratory in accordance with ASTM A6 or A568, as applicable, shall constitute sufficient evidence of conformity with the above standards if the identity of these materials are properly maintained.
f. Identification: When the structural steel is furnished to be a specified minimum yield point greater than 36 ksi, the ASTM specification number or other specifications designation shall be indicated by the mill near one end of each structural shape or plate, such specifications designation may be applied to the

top piece of each bundle or lift, or the bundle or lift may be tagged. After fabrication, each piece shall be marked in the Fabricator's plant by painting the ASTM or other specification designation on the piece, over any shop coat of paint, prior to shipment from the Fabricator's plant. Pieces of such steel which are to be cut to smaller sizes shall, before cutting, be legibly marked with the Fabricator's identification mark on each of the smaller pieces to provide continuity of identification.

g. Welding (Shop and Field): Fabrication/erection inspection and testing of weldments shall be provided by the Contractor in accordance with AWS D1.1, Section 6. The fabrication/erection inspector(s) shall be AWS Certified Welding Inspector(s) in accordance with the provisions of AWS QCI, Standard for Qualifications and Certification of Welding Inspectors. Provide certification that welding inspectors, welders, welding operators, and tack welders to be employed in work have satisfactorily passed AWS qualification tests within previous twelve (12) months prior to starting the work. If recertification of welders is required, it will be Contractor's responsibility to assure compliance. Each welder working on the project shall mark his identification symb ol at each weldment completed whether in shop or field.

h. High-Strength Bolts: Installation shall conform to AISC, Specification for Structural Joints using ASTM A325 and A490. Each member of bolting crew applying high - strength bolts shall be assigned an identification mark or symbol which he shall apply to each joint worked. The Contractor shall verify that all contact surfaces in slip critical (friction-type) connections conform to the applicable requirements, and that all bolts have been appropriately installed and tightened.

3. Submittals: The following shall be submitted to the Engineer of Record (unless noted otherwise) for approval in accordance with Section 01300 SUBMITTALS:
   a. Shop Drawings
      1) Structural Steel System and Structural Connections; Shop and erection details including members (with their connections) not shown on the contract drawings. Welds shall be indicated by standard welding symbols in accordance with AWS A2.4.
   b. Product Data
      1) Erection; Prior to erection, erection plan of the structural steel framing describing all necessary temporary supports, including the sequence of installation and removal.
      2) Welding; WPS not pre-qualified and WPS pre-qualified.
   c. Samples
      1) Random samples of bolts, nuts, and washers as delivered to the job site if requested, taken in the presence of the Quality Control Inspector and provided to the Quality Control Inspector for testing to establish compliance with specified requirements.
         a). High Strength Bolts and Nuts
         b). Carbon Steel Bolts and Nuts
         c) Nuts Dimensional Style
         d). Washers
   d. Certificates
      1) Mill Test Reports; Certified copies of mill test reports for structural steel, structural bolts, nuts, washers and other related structural steel items, including attesting that the structural steel furnished contains no less than 25 percent recycled scrap steel and meets the requirements specified, prior to the installation.
      2) Welder Qualifications; Certified copies of welder qualifications test records showing qualification in accordance with AWS D1.1.
      3) Welding Inspector; Welding Inspector qualifications.
      4) Fabrication; A copy of the AISC certificate indicating that the fabrication plant meets the specified structural steelwork category.

4. Product Handling And Storage
   a. Delivery of materials to be installed under other sections:
      1) Anchor bolts and other anchorage devices, which are embedded in cast-in-place concrete or masonry construction, shall be delivered to the project site in time to be installed before the start of

cast-in-place concrete operations or masonry work.

2) Provide setting drawings, templates, and directions for the installation of the anchor bolts and other devices.

b. Storage of Materials:

1) Structural steel members which are stored at the project site shall be above ground on platforms, skids, or other supports.
2) Steel shall be protected from corrosion.
3) Other materials shall be stored in a weather tight and dry place until ready for use in the work.
4) Packaged materials shall be stored in their original, unbroken packages or containers.

5. Welding Inspector: Welding Inspector qualifications shall be in accordance with AWS D1.1

6. Qualifications: The structural steel fabricating plant and the steel erector shall have the personnel, organization, experience, procedures, knowledge, equipment, capacity, and commitment to produce and erect fabricated steel of the structural steel work involved in this project.
   a. The Fabricator shall have specialized in performing the work of this section with a minimum of 5 years documented experience.
   b. The Erector shall have specialized in performing the work of this section with minimum 5 years documented experience.
   c. Fabricator shall be certified under the AISC "Quality Certification Program" or equivalent verification for the following category: I. Conventional Steel Buildings.

7. Verification Testing And Inspection: Provide Testing and Inspection services conforming with the requirements of the Contract Documents as provided is Specification Division 1. These services will consist of the following:
   a. Independent Testing and Inspection Agency (Materials Engineering Laboratory) qualified to perform the following services:
      1) Review the pertinent Construction Documents and included reference standards.
      2) Inspect, test, and/or verify the following in accordance with ACIL Manual of Practice, Scope of Services, Section VI.
         a). Mill Materials: ASTM Specification and grade, camber, flatness, straightness, sweep, cross section, surface and edge condition, surface preparation and soundness.
         b). Fabricated Material: Traceability and identification of special strength or proper material, edge roughness, straightness, curving and cambering, fitting and fastening, welding, painting, handling, and storage.
         c). Erection: Dimensional tolerances, fielding bolting and welding, non-destructive examination where specified, damaged or distorted material, laminations and lamellar tearing, base plates and bearing.
         d). Corrections: Review corrections.
      3) Reports: Report discrepancies immediately; periodic reports weekly.
      4) Maintain Identity: Test requirements for materials as specified herein or incorporated in referenced documents may be waived provided certified copies of mill test or test reports from approved laboratories performed on previously manufactured materials are submitted and approved. Test reports shall be accompanied by notarized certificates from the Manufacturer certifying that the tested material was of the same type, quality, and manufacture as that being supplied for this project. Test shall have been conducted not more than one year prior to the date such materials are submitted for approval. Proper identification of all high-strength of special steels shall be maintained throughout the fabrication process.
      5) Inspection of Shop and Field Welds: Inspection of shop welds shall be in accordance with Section 6 and 8.15 of AWS Structural Welding Code and as follows:
         a). Visual inspection of all shop welds in accordance with AWS D1.1, 6.5.
         b). A representative sample of full penetration welds and all questionable quality full penetration

welds shall be non-destructive tested by one of the following as appropriate:
(1) Liquid penetrant inspection of the shop welds in accordance with AWS D1.1, 6.5 (ASTM-E165)
(2) Magnetic particle inspection of the shop welds in accordance with AWS D1.1, 6.7.5 (ASTM-E105)
(3) Radiographic inspection of the shop welds in accordance with AWS D1.1, Part B, Chapter 6 - Inspection (ASTM E94 and E99)
(4) Ultasonic inspection of the shop welds indicated in accordance with AWS D1.1, Part C, Chapter 6 - Inspection (ASTM E164).

c). Stud welding inspection of shop-welded studs in accordance with AWS D1.1, 7.8.

6) Inspection of shop painting:
a). Surface preparation prior to painting shall be visually evaluated for degree of cleaning by comparison with SSPC pictorial standards.
b). Measurement of dry film thickness of each coat of shop-applied paint shall be in accordance with ASTM D1005-72.

7) Erection verification inspection and testing:
a). Verification of qualifications of field procedures and personnel.
b). Inspection of erected structural steel work for conformance with the requirements specified.
c). Inspection of field-assembled high-strength bolted construction shall be in accordance with AISC Specification for Structural Joints, Section 6, using ASTM A325 or A490 bolts.
d). Inspection of field welds shall be in accordance with AWS Structural Welding Code, section 6.
e). Perform non-destructive testing as appropriate for all field welds of questionable quality (or replace weld) and test a minimum of 10% of all full penetration field welds.
f). The Fabricator and Erector shall receive copies of all inspection reports.

b. The Contractor shall correct deficiencies in structural steel work which inspections and laboratory test reports have indicated to be not in compliance with requirements. Perform additional tests, at Contractor's expense, as may be necessary to reconfirm any non-compliance of original work and as may be necessary to show compliance of corrected work.

8. Responsibilities
a. The Contractor/Fabricator is responsible for properly implementing the design drawings, properly furnishing materials and workmanship, maintaining the specified fabrication and erection tolerances, and for fit and erectability of the structure. The project A/E is not responsibility for reviewing the means and methods of construction or related job safety issues, which are the Contractor's responsibility.
b. AISC-S303 Code, paragraph 1.5.1. Where connections are not shown on drawings, the connections shall be in accordance with the requirements of the AISC Specifications Sections 1.15 Connections. Where reactions and/or moments are shown on drawings, connections shall be designed to accommodate these forces, under the supervision of a Professional Structural Engineer experienced in the design of this work, and subject to review and approval by the Structural Engineer.
c. Substitutions of member sizes due to non-availability of materials shall be of equivalent strength and rigidity to that specified, shall be compatible with the design and shall be approved by the Structural Engineer of Record after being specifically called to his/her attention in writing.

9. Field Measurements: Verify that field measurements are as shown on drawings or as approved on shop drawings.

Products: 1. Structural Steel
a. Carbon Grade Steel: Carbon grade steel shall conform to ASTM A36/A36M, grade 36.
b. High-Strength Low-Alloy Steel: High-strength low-alloy steel shall conform to ASTM A572/A572M, Grade 50.
c. Structural Shapes for Use in Building Framing: Wide flange shapes in accordance with ASTM

A992/A992M.

2. Structural Tubing: Structural tubing shall conform to ASTM A 500, Grade B.

3. Steel Pipe: Steel pipe shall conform to ASTM A53/A53M, Grade B.

4. High Strength Bolts And Nuts: High strength bolts shall conform to ASTM A325

5. Carbon Steel Bolts And Nuts: Carbon steel bolts shall conform to ASTM A307, Grade A. High-Strength (heat-treated) Steel Bolts: ASTM A490. High-Strength Anchor Bolts and Threaded Rod: ASTM A449.

6. Nuts Dimensional Style: Carbon steel nuts shall be Hex style when used with ASTM A307 bolts or Heavy Hex style when used with ASTM A325/A325M or ASTM A490/A490M bolts.

7. Paint
   a. Prepare structural component surfaces in accordance with SSPC SP3.
   b. Shop prime structural steel members. Do not prime surfaces that will be field welded, friction bolted, or in contact with concrete.

8. Shear Stud Connectors: In accordance with AWS D1.1

9. Threaded Hanger Rods: ASTM A36

10. Welding Materials: AWS D1.1; type required for materials being welded.

11. Grout: Non-shrink type, pre-mixed compound consisting of non-metallic aggregate, cement, water reducing and plasticizing additives, capable of developing a minimum compressive strength of 7000 psi at 28 days.

12. Expansion Bolts: Stud type with single piece wedge, carbon steel.

13. Anchor Bolts: ASTM F 1554.

14. Source Quality Control And Tests
   a. Provide Certified Mill Test Reports (CMTR) for all structural steel sections.
   b. Provide manufacturer's Certificate of Conformance for all bolts, nuts, washers, rods, weld materials, stud shear connectors, grout and other materials provided under this section.

SECTION 05210 - STEEL JOISTS

Scope:

1. Provide steel joists for floor and roof construction:
   a. Open web steel joists: K-series.
   b. Longspan steel joists: LH-series.
   c. Deep longspan steel joists: DLH-series.

References:

1. The publications referenced above (or below) establish minimum requirements for materials, systems and execution which may be specified in this Section.

   STEEL JOIST INSTITUTE (SJI)

SJI Specs & Tables	Standard Specifications Load Tables and Weight Tables for Steel Joists and Joist Girders

SJI	Recommended Code of Standard Practice for Steel Joists and Joist Girders
SJI	Tech. Digest No. 1, Design of Compression Chords.
SJI	Tech. Digest No. 2, Spacing of Bridging.
SJI	Tech. Digest No. 3, Structural Design of Steel Joists to Resist Ponding Loads.
SJI	Tech. Digest No. 4, Design of Fire-Resistive Assemblies.
SJI	Tech. Digest No. 5, Vibration of Steel Joist - Concrete Slab Floors.
SJI	Tech. Digest No. 6, Structural Design of Steel Joist Roofs to Resist Uplift Loads.
SJI	Tech. Digest No. 8, Welding of Open Web Steel Joists.
SJI	Tech. Digest No. 9, Handling and Erection of Joists.

AMERICAN WELDING SOCIETY (AWS)

AWS D1.1	Structural Welding Code - Steel

AMERICAN SOCIETY FOR TESTING AND MATERIALS (ASTM)

ASTM A36/A36M	Carbon Structural Steel
ASTM A307	Carbon Steel Bolts and Studs, 60,000 PSI Tensile Strength
ASTM A325	Structural Bolts, Steel, Heat Treated, 120/105 KSI Minimum Tensile Strength

General:

1. Submittals: The following shall be submitted to the Engineer of Record (unless noted otherwise) for approval in accordance with Section 01300 SUBMITTALS:
   a. Shop Drawings
      1) Steel Joists; Detail drawings shall include fabrication and erection details, specifications for shop painting, and identification markings of joists and joist girders.
   b. Product Data
      1) Manufacturer's instructions; Submit manufacturer's specifications and installation instructions for each type of joist and accessories. Include manufacturer's certification that joists comply with SJI "Specifications".
   c. Certificates
      1) Steel Joists; Certificates stating that the steel joists and joist girders have been designed and manufactured in accordance with SJI Specs & Tables. Complete engineering design computations may be submitted in lieu of the certification.
      2) Weld Test Data and Certificates; Copies of weld tests performed on welds to be used in the fabrication of the girders. Submit manufacturer's certificates that welders employed on the work have met AWS verification within previous 12 months.

2. General Requirements: Designate steel joists and joist girders on the contract drawings in accordance with the standard designations of the Steel Joist Institute. Joists of other standard designations or joists with properties other than those shown may be substituted for the joists designated provided the structural properties are equal to or greater than those of the joists shown and provided all other specified requirements are met.

3. Delivery And Storage: Materials shall be delivered to the site in undamaged condition and stored off the ground in a well drained location, protected from damage, and easily accessible for inspection and handling.

4. Quality Assurance
   a. Perform work in accordance with SJI, including headers and other supplementary framing.
   b. Maintain one copy of each document on site.
   c. Fabricator: Company specializing in performing the work of this section with minimum five years documented experience.
   d. Erector: Company specializing in performing the work of this section with minimum five years

documented experience.

e. Design connections not detailed on the contract drawings under direct supervision of a Professional Structural Engineer experienced in design of this work and licensed in the state where the project is located.

f. Provide joists fabricated in compliance with the following, and as herein specified.
   1) Steel Joist Institute (SJI) Standard Specifications, Load Tables and Weight Tables for; K-Series open web steel joists, LH-Series Longspan steel joists, and Joist Girders.

g. Qualification of Welding: Qualify welding processes and welding operators in accordance with American Welding Society (AWS) "Standard Qualification Proceedure". Joists welded in place are subject to inspection and testing. Expense of removing and replacing any portion of steel joists for testing purposes will be borne by Government if welds are found to be satisfactory. Remove and replace work found to be defective and provide new acceptable work.

h. Supplier furnish written certification that his current design(s) has been checked by SJI and found to conform to the applicable SJI Specifications and the recommended Code of Standard Practice for Steel Joists or furnish Design Verification Tests conforming to requirements of SJI Standard Specifications, Section 4.6 (K-Series), Section 103.8 (LH-Series and DLH-Series) and Section 1003.8 (Joist Girders).

i. The government reserves the right to have his representative make an inspection of the joists prior to shipment.

j. Performance Test: If required, conduct performance tests in accordance with procedures described in SJI "Recommended Code of Standard Practice".

Products:

1. Open Web Steel JoisTS: Open web steel joists shall conform to SJI Specs & Tables, K-Series. Joists shall be designed to support the loads given in the standard load tables of SJI Specs & Tables.

2. Longspan Steel Joists: Longspan steel joists and deep longspan steel joists shall conform to SJI Specs & Tables, LH-Series and DLH-Series. Joists designated LH and DLH shall be designed to support the loads given in the applicable standard load tables of SJI Specs & Tables.

3. Joist Girders: Joist girders shall conform to SJI Specs & Tables.

4. Accessories And Fittings: Accessories and fittings, including end supports and bridging, shall be in accordance with the standard specifications under which the members were designed. Anchor bolts and required nuts and washers: ASTM A325. Structural Steel for Supplementary Framing and Joist Leg Extensions: ASTM A36. Welding materials: Applicable AWS D1.1, type required for materials being welded. For Open Web Joists K-Series conform to SJI Standard Specifications for Open Web Structural Joists, K-Series, and to SJI Technical Digest No. 8, Welding of Open Web Steel Joists.

5. Shop Painting: Joists, joist girders and accessories shall be shop painted with a rust-inhibiting primer paint. For joists and joist girders which will be finish painted under Section 09900 PAINTS AND COATING, the primer paint shall be limited to a primer which is compatible with the specified finish paint. Shop and Touch-Up Primer: SSPC 15, Type 1 red oxide.

6. Design And Fabrication
   a. Fabricate joists to achieve minimum end bearings of:
      1) 2 1/2 inches on steel for K-Series. (4 inches for LH-Series)
      2) 4 inches on masonry for K-Series. (6 inches LH-Series)
   b. Fabricate joists and joist girders with bearing depths indicated on the contract drawings.
   c. The Fabricator shall have complied with the requirements for Verifications of Design and Manufacture stipulated in the applicable SJI Specifications herein referenced.
   d. Design and fabricate steel joists in accordance with SJI Standard Specifications, including headers and other support framing. Verify drawing dimensions and field conditions prior to commencing fabrication. Provide for concentrated loads shown on the contract drawings. Provide for uplift wind pressures

applied to the roof joists.

e. Bottom Chord Extensions: Provide bottom joist chord extensions at all columns not framed in at least two directions with structural steel members and connect thereto or as otherwise shown on drawings.

f. Extended Ends: Provide extended ends on joists where shown, complying with manufacturer's standards and requirements of applicable SJI "Specifications" and load tables and designed loads shown on the contract drawings.

g. Ceiling Extensions: Provide ceiling extensions in areas having ceilings attached directly to joist bottom chord. Provide either an extended bottom chord element or a separate unit, to suit manufacturer's standards, of sufficient strength to support ceiling construction. Extend ends to within 1/2 inch of finished wall surface unless otherwise indicated.

h. Bridging: Provide horizontal or diagonal type bridging for "open web" joists, complying with SJI "Specifications" and as noted on plans. Provide bridging anchors for ends of bridging lines terminating at walls or beams. Check standing seam roof deck systems where applicable and provide bridging as required to adequately brace top chords against lateral movement under full loading condition. Check bridging design to accommodate uplift forces due to wind as noted on drawings.

i. End Anchorage: Provide end anchorages to secure joists to adjacent construction, complying with SJI "Specifications", unless otherwise indicated.

j. Header Units: Provide header units to support tail joists at openings in floor or roof system not shown framed with steel shapes.

k. Camber joists to allow for dead-load deflection as provided in the SJI Standard Specifications.

l. Shop Painting: Remove loose scale, heavy rust, and other foreign materials from fabricated joists and accessories before application of shop paint. Apply one shop coat of primer paint to steel joists and accessories, by spray, dipping, or other method to provide a continuous dry paint film thickness of not less than 0.50 mil. Asphalt coating is not permitted where field painting is required.

m. Tolerances:

1) Overall length:
   a). Up to 80 feet, maximum tolerance +/- 3/8 inch.
   b). 80 feet and over, maximum tolerance +/- 1/2 inch.

2) Depth: Maximum tolerance –1/8 inch, +1/2 inch measured at the panel point on the vertical axis of the joist.

3) Bearing ends:
   a). Depth: Maximum tolerance +/- 1/8 inch on manufacturer's specified depth.
   b). Bearing surface squareness: Maximum tolerance of +/- 3/8 inch per 12 inches in transverse and longitudinal directions.

4) Cross-section deviation:
   a). 3/16 inch maximum vertical displacement between the two members of a two-member top chord.
   b). 1/4 inch maximum vertical displacement between the two members of a two-member bottom chord.

5) Slotted bearing connections:
   a). Maximum tolerance +/- 3/8 inch on center to center of slots along length of joist.
   b). Maximum tolerance +/- 1/8 inch on center to center of slots along gauge line.

6) Camber: Maximum tolerance on manufacturer's specified camber shall be +/- 1/4 inch or +/- length/1600 whichever is greater. No negative camber allowed and no consideration is made for joist weight deflection.

7) Lateral sweep: Shop tolerances shall not exceed 1/2 inch or length/360 whichever is greater. Verification of shop tolerances shall be made prior to erection. Measurement shall be made by supporting the joist by its top chord at the approximate 1/3 points and letting it hang freely. The lateral displacement of the top chord from a straight line connecting the joist ends shall constitute the amount of lateral sweep.

7. Finish

a. Prepare joist component surfaces in accordance with SSPC SP2.

b. Shop prime joists. Do not prime surfaces that will be field welded.

SECTION 05300 - STEEL DECKING

Scope: 1. Provide structural roof and floor decking:
a. Standard roof deck units.
b. Acoustical roof deck units.
c. Standard metal floor decking.
d. Cellular metal floor decking.
e. Composite metal floor decking.
f. Combination composite and cellular decking.

References: 1. The publications referenced above (or below) establish minimum requirements for materials, systems and execution which may be specified in this Section.

AMERICAN INSTITUTE OF STEEL CONSTRUCTION (AISC)

AISC ASD Spec S335	Specification for Structural Steel Buildings - Allowable Stress Design, Plastic Design

AMERICAN IRON AND STEEL INSTITUTE (AISI)

AISI Cold-Formed Mnl	Cold-Formed Steel Design Manual

AMERICAN SOCIETY FOR TESTING AND MATERIALS (ASTM)

ASTM A108	Steel Bars, Carbon, Cold-Finished, Standard Quality
ASTM A570/A570M	Steel, Sheet and Strip, Carbon, Hot-Rolled, Structural Quality
ASTM A611	Structural Steel (SS), Sheet, Carbon, Cold-Rolled
ASTM A653/A653M	Steel Sheet, Zinc-Coated (Galvanized) or Zinc-Iron Alloy-Coated (Galvannealed) by the Hot-Dip Process
ASTM A780	Repair of Damaged and Uncoated Areas of Hot-Dipped Galvanized Coatings
ASTM A792/A792M	Steel Sheet, 55% Aluminum-Zinc Alloy-Coated by the Hot-Dip Process
ASTM C423	Sound Absorption and Sound Absorption Coefficients by the Reverberation Room Method
ASTM E795	Mounting Test Specimens During Sound Absorption Tests

AMERICAN WELDING SOCIETY (AWS)

AWS D1.1	Structural Welding Code - Steel
AWS D1.3	Structural Welding Code - Sheet Steel

STEEL DECK INSTITUTE (SDI)

SDI Diaphram Mnl	Diaphragm Design Manual
SDI Pub No 29	Design Manual for Composite Decks, Form Decks, Roof Decks, and Cellular Metal Floor Deck with Electrical Distribution

THE SOCIETY FOR PROTECTIVE COATINGS (SSPC)

SSPC Paint 20	Zinc-Rich Primers (Type I - "Inorganic" and Type II - "Organic")

General:

1. Submittals: The following shall be submitted to the Engineer of Record (unless noted otherwise) for approval in accordance with Section 01300 SUBMITTALS:
   a. Shop Drawings
      1) Drawings shall include type, configuration, structural properties, location, and necessary details of deck units, accessories, and supporting members; size and location of holes to be cut and reinforcement to be provided; location and sequence of welded or fastener connections; and the manufacturer's erection instructions.
         a). Deck Units
         b). Accessories
         c). Attachments
         d). Holes and Openings
   b. Product Data
      1) Deck Units; Design computations for the structural properties of the deck units or SDI certification that the units are designed in accordance with SDI specifications.
      2) Attachments; Prior to welding operations, copies of qualified procedures and lists of names and identification symbols of qualified welders and welding operators.
   c. Samples
      1) A 2 square feet sample of the decking material to be used, along with a sample of each of the accessories used. A sample of acoustical material to be used shall be included.
         a). Deck Units
         b). Accessories
   d. Certificates
      1) Manufacturer's certificates attesting that the decking material meets the specified requirements. Manufacturer's certificate attesting that the operators are authorized to use the low-velocity piston tool.
         a). Deck Units
         b). Attachments

2. Delivery, Storage, And Handling: Deck units shall be delivered to the site in a dry and undamaged condition, stored off the ground with one end elevated, and stored under a weathertight cover permitting good air circulation. Finish of deck units shall be maintained at all times by using touch-up paint whenever necessary to prevent the formation of rust.

Products:

1. Deck Units: Deck units shall conform to SDI Pub No 29. Panels of maximum possible lengths shall be used to minimize end laps. Deck units shall be fabricated in lengths to span 3 or more supports with flush, telescoped, or nested 2 inch laps at ends, and interlocking, or nested side laps, unless otherwise indicated. Deck with cross-sectional configuration differing from the units indicated may be used, provided that the properties of the proposed units, determined in accordance with AISI Cold-Formed Mnl, are equal to or greater than the properties of the units indicated and that the material will fit the space provided without requiring revisions to adjacent materials or systems. Fabricate metal decking in accordance with SDI Design Manual for Composite Decks, Form Decks, Roof Decks to accommodate maximum working stress of 138 MPa and maximum span deflection of L/240.

   a. Roof Deck: Steel deck used in conjunction with insulation and built-up roofing shall conform to ASTM A446 Grade A or B or better structural quality, ASTM A611 Grade C or ASTM A792/A792M. Roof deck units shall be fabricated of the steel design thickness required by the design drawings and shall be painted with an epoxy coating or equivalent applied to prime-coating in accordance with manufacturer's standard. Steel deck type and thickness shall be as specified on the Structural Drawings with no stiffing ribs on the top flange or bearing surface to provide maximum roofing contact area.
   b. Form Deck: Deck used as a permanent form for concrete shall conform to ASTM A653/A653M Grade A or B structural quality or ASTM A611 Grade C. Deck used as a form for concrete shall be fabricated of

the steel design thickness required by the design drawings, and shall be zinc-coated in conformance with ASTM A653/A653M, G60 coating class.

c. Sump Pans: Sump pans shall be provided for roof drains and shall be minimum 0.075 inch thick steel, flat bottom type, sloped sides, recessed 1 1/2 inch below roof deck surface and watertight. Sump pans shall be shaped to meet roof slope by the supplier or by a sheet metal specialist. Bearing flanges of sump pans shall overlap steel deck a minimum of 3 inches. Opening in bottom of pan shall be shaped, sized, and reinforced to receive roof drain.

d. Shear Connectors: Shear connectors shall be headed stud type, ASTM A108, Grade 1015 or 1020, cold finished carbon steel with dimensions complying with AISC ASD Spec S335 .

e. Floor Drain Pan: Fabricate of 0.075 inch thick sheet steel, flat bottom, sloped sides, recessed 1 1/2 inch below floor deck surface, bearing flange 3 inch wide, sealed watertight.

2. Touch-Up Paint: Touch-up paint for shop-painted units shall be of the same type used for the shop painting, and touch-up paint for zinc-coated units shall be an approved galvanizing repair paint with a high-zinc dust content. Welds shall be touched-up with paint conforming to SSPC Paint 20 in accordance with ASTM A 780. Finish of deck units and accessories shall be maintained by using touch-up paint whenever necessary to prevent the formation of rust.

3. Adjusting Plates: Adjusting plates or segments of deck units shall be provided in locations too narrow to accommodate full-size units. As far as practical, the plates shall be the same thickness and configuration as the deck units.

4. Closure Plates: Shall be 22 ga thick sheet steel; of required profiles and size.

a. Closure Plates for Roof Deck: Voids above interior walls shall be closed with sheet metal where shown. Open deck cells at parapets, end walls, eaves, and openings through roofs shall be closed with sheet metal. Sheet metal shall be same thickness as deck units.

b. Closure Plates for Floor Deck: The concrete shall be supported and retained at each floor level. Provide edge closures at all edges of the slab of sufficient strength and stiffness to support the wet concrete. Metal closures shall be provided for all openings in floor steel deck 1/4 inch and over. Fabricate metal closure plates for closing deck to columns, angle beams, etc., of not less than 18 ga thick material galvanized. Form to close deck flutes and lap on the deck approximately 2 inch minimum.

1) Cover Plates to Close Panels: Cover plates to close panel edge and end conditions and where panels change direction or abut. Butt joints in floor steel deck may receive a tape joint cover. Fabricate metal cover plates for end-abutting floor deck units of not less than same thickness as decking. Form to match contour of deck units and approximately 6 inch wide.

2) Column Closures to Close Openings: Column closures to close openings between steel deck and structural steel columns.

3) Sheet Metal: Where deck is cut for passage of pipes, ducts, columns, etc., and deck is to remain exposed, provide a neatly cut sheet metal collar to cover edges of deck. Do not cut deck until after installation of supplemental supports.

4) Closure strips for floor deck: Fabricate metal closure strips for openings between decking and other construction of not less than 18 ga minimum sheet steel. Form to provide tight-fitting closure at open ends of flutes and sides of decking.

5. Accessories: The manufacturer's standard accessories shall be furnished as necessary to complete the deck installation. Metal accessories shall be of the same material as the deck and have minimum design thickness as follows: saddles, 0.0474 inch; welding washers, 0.0598 inch; cant strip, 0.0295 inch; other metal accessories, 0.0358 inch; unless otherwise indicated. Accessories shall include but not be limited to saddles, welding washers, cant strips, butt cover plates, under lapping sleeves, and ridge and valley plates. Sheet metal accessories shall be ASTM A526 commercial quality galvanized.

6. Bearing Plates and Angles: ASTM A36 steel

7. Welding Materials: ASW D1.1

SECTION 05400 - COLD FORMED METAL FRAMING

Scope: 1. Provide lightgage metal framing:
   a. Load bearing steel studs.
   b. Non-load bearing steel studs.
   b. C-shaped joists.

References: 1. The publications referenced above (or below) establish minimum requirements for materials, systems and execution which may be specified in this Section.

AMERICAN IRON AND STEEL INSTITUTE (AISI)

AISI Cold-Formed Spec	Specification & Commentary for the Design of Cold-Formed Steel Structural Members (Part V of the Cold-Formed Steel Design Manual)

AMERICAN SOCIETY FOR TESTING AND MATERIALS (ASTM)

ASTM A123/A123M	Zinc (Hot-Dip Galvanized) Coatings on Iron and Steel Products
ASTM A153/A153M	Zinc Coating (Hot-Dip) on Iron and Steel Hardware
ASTM A370	Mechanical Testing of Steel Products
ASTM A653/A653M	Steel Sheet, Zinc-Coated (Galvanized) or Zinc-Iron Alloy-Coated (Galvannealed) by the Hot-Dip Process
ASTM B633	Electrodeposited Coatings of Zinc on Iron and Steel
ASTM C1007	Installatiion of Load Bearing (Transverse and Axial) Steel Studs and Related Accessories
ASTM C955	Load-Bearing (Transverse and Axial) Steel Studs, Runners (Tracks), and Bracing or Bridging for Screw Application of Gypsum Panel Products and Metal Plaster Bases
ASTM E329	Agencies Engaged in the Testing and/or Inspection of Materials Used in Construction

AMERICAN WELDING SOCIETY (AWS)

AWS D1.3	Structural Welding Code - Sheet Steel

SOCIETY OF AUTOMOTIVE ENGINEERS INTERNATIONAL (SAE)

SAE J 78	Steel Self Drilling Tapping Screws

METAL FRAMING MANUFACTURERS ASSOCIATION (MFMA)

MFMA	Guidelines for the Use of Metal Framing

General: 1. Submittals: The following shall be submitted to the Engineer of Record (unless noted otherwise) for approval in accordance with Section 01300 SUBMITTALS:
   a. Shop Drawings
      1) Framing Components
         a). Cross sections, plans, and/or elevations showing component types and locations for each

framing application; including shop coatings and material thicknesses for each framing component.

b). Connection details showing fastener type, quantity, location, and other information to assure proper installation.

c). Drawings depicting panel configuration, dimensions, components, locations, and construction sequence if the Contractor elects to install prefabricated/prefinished frames.

d). For cold-formed metal framing; drawings, connection details, and design calculations to be signed and sealed by a professional engineer registered in the state where the project is located.

b. Certificates

1) Mill Certificates; Mill certificates or test reports from independent testing agency, qualified in accordance with ASTM E329, showing that the steel sheet used in the manufacture of each cold-formed component complies with the minimum yield strengths and uncoated steel thickness specified. Test reports shall be based on the results of three coupon tests in accordance with ASTM A370.

2) Welds; Certified copies of welder qualifications test records showing qualification in accordance with AWS D1.3.

3) Product Data; Provide data on standard framing members; describe materials and finish, product criteria and limitations. ASTM A370.

4) Product Test Reports; From a qualified testing agency indicating that each of the following complies with requirements, based on comprehensive testing of current products:

a). Expansion anchors.

b). Mechanical fasteners.

c). Vertical deflection clips.

d). Miscellaneous structural clips and accessories.

2. Delivery, Handling And Storage: Materials shall be delivered and handled preventing bending or other damage, and avoiding contact with soil or other contaminating materials. Finish of the framing members shall be maintained at all times, using an approved high zinc dust content, galvanizing repair paint whenever necessary to prevent the formation of rust.

3. System Description: Size components to withstand design loads as indicated on contract drawings. Maximum Allowable Deflection: h/600 span. Design wall system to provide for movement of components without damage, failure of joint seals, undue stress on fasteners, or other detrimental effects when subject to seasonal or cyclic day/night temperature ranges. Design system to accommodate construction tolerances, deflection of building structural members, and clearances of intended openings.

4. Quality Assurance: Calculate structural properties of framing members in accordance with MFMA - Guidelines for the Use of Metal Framing and AWS D1.3 requirements. Maintain one copy of each document on site. Manufacturer Qualifications: Company specializing in manufacturing the Products specified in this section. Installer Qualifications: Company specializing in performing the work of this section. Design structural elements under direct supervision of a Professional Structural Engineer experienced in design of this work and licensed in the state where the Project is located.

Products:

1. Steel Studs, Tracks, Bracing, Bridging, And Accessories: Framing components shall comply with ASTM C955 and the following:

a. Material shall be corrosion-resistant steel complying with ASTM A 653/A 653M, Grade 230 (33,000 psi) or higher, having a minimum yield of 33,000 psi and a G 60 minimum zinc coating.

b. Studs: sheet steel, cold-rolled, punched web, knurled faces, size and gauge as required by design.

c. Track: sheet steel, cold-rolled; channel shaped; same width as studs, tight fit; solid web, size and gauge as required by design.

d. Framing Materials: roll from new sheet steel; re-rolled steel not acceptable.
e. Struts: ASTM A570 or A525 sheet steel, cold-rolled, size and gauge as required by design.

2. Markings: Studs and track shall have product markings on the web of the section. The markings shall be repeated throughout the length of the member at a maximum spacing of 4 feet on center and shall be legible and easily read. The product marking shall include the following:
   a. Manufacturer's identification.
   b. Minimum delivered uncoated steel thickness.
   c. Protective coating designator.
   d. Minimum yield strength.

3. Connections: Screws for steel-to-steel connections shall be self-drilling tapping in compliance with SAE J 78 of the type, size, and location as required by design. Electroplated screws shall have a Type II coating in accordance with ASTM B633. Screws, bolts, and anchors shall be hot-dipped galvanized in accordance with ASTM A123/A123M or ASTM A153/A153M as appropriate. Screws bolts, and anchors shall be hot dipped galvanized in accordance with ASTM A123/A123M or ASTM A153/A153M as appropriate. Welding in conformance with AWS D1.1 and AWS D1.3.

4. Accessories: Bracing and Bridging: Formed sheet steel, channel shape, size and gauge as required by design. Plates, Gussets, Clips and Angles: Formed sheet steel, size and gauge as required by design. Touch-Up Primer: SSPC paint 20, type I, inorganic, zinc rich.

5. Fabrication: Fabricate assemblies of formed sections of sizes and profiles required; with framing members fitted, reinforced, and braced to suit design requirements. Fit and assemble in largest practical sections for delivery to site, ready for installation.

6. Finishes: Zinc coated (galvanized) by the hot-dip process, G-60 minimum, G-90 as required.

SECTION 05500 - METAL FABRICATIONS

Scope:

1. Provide miscellaneous metal items fabricated from heavy gage ferrous metals and not provided with structural steel system:
   a. Steel pipe handrails and railings.
   b. Wall ladders.
   c. Ships ladders.
   d. Pan stairs and landings.
   e. Grating stairs and landings.
   f Checkered Plate Stairs and Landings
   g. Loose angle lintels.
   h. Structural steel door frames.
   i. Bollards, concrete filled.
   j. Roof opening steel frames.
   k. Welded wire fabric
   l. Floor grating and frames
   m. Partitions, Diamond mesh type
   n. Steel door frames
   o. Trench covers, frames, and liners
   p. Operable partition supports
   q. Overhead coiling door frame
   r. Aluminum ramps
   s. Corner guards

t. Trash Guard
k. Miscellaneous framing and supports.

References: 1. The publications referenced above (or below) establish minimum requirements for materials, systems and execution which may be specified in this Section.

ALUMINUM ASSOCIATION (AA)

AA DAF-45 Designation System for Aluminum Finishes

AMERICAN NATIONAL STANDARDS INSTITUTE (ANSI)

ANSI A14.3 Ladders - Fixed - Safety Requirements

AMERICAN SOCIETY FOR TESTING AND MATERIALS (ASTM)

ASTM A 36/A 36M Carbon Structural Steel
ASTM A 53/A 53M Pipe, Steel, Black and Hot-Dipped, Zinc-Coated, Welded and Seamless
ASTM A 123/A 123M Zinc (Hot-Dip Galvanized) Coatings on Iron and Steel Products
ASTM A 500 Cold-Formed Welded and Seamless Carbon Steel Structural Tubing in Rounds and Shapes
ASTM A 653/A 653M Steel Sheet, Zinc-Coated (Galvanized) or Zinc-Iron Alloy-Coated (Galvannealed) by the Hot-Dip Process
ASTM A 924/A 924M General Requirements for Steel Sheet, Metallic-Coated by the Hot-Dip Process
ASTM B 633 Electrodeposited Coatings of Zinc On Iron And Steel

AMERICAN WELDING SOCIETY (AWS)

AWS D1.1 Structural Welding Code – Steel

U.S. GENERAL SERVICES ADMINISTRATION (GSA)

CID A-A-344 (Rev B) Lacquer, Clear Gloss, Exterior, Interior

NATIONAL ASSOCIATION OF ARCHITECTURAL METAL MANUFACTURERS (NAAMM)

NAAMM MBG 531 Metal Bar Grating Manual

Submittals: 1. Shop Drawings: Detail drawings indicating material thickness, type, grade, and class; dimensions; and construction details. Drawings shall include catalog cuts, erection details, manufacturer's descriptive data and installation instructions, and templates. Detail drawings for the following items:

Steel pipe handrails and railings.
Wall ladders.
Ships ladders.
Pan stairs and landings.
Grating stairs and landings.
Checkered Plate Stairs and Landings
Loose angle lintels.
Structural steel door frames.
Bollards, concrete filled.
Roof opening steel frames.

Welded wire fabric
Floor grating and frames
Partitions, Diamond mesh type
Steel door frames
Trench covers, frames, and liners
Operable partition supports
Overhead coiling door frame
Aluminum ramps
Corner guards
Trash Guard
Miscellaneous framing and supports

Products:

1. Materials:
   a. Steel plates, shapes, and bars: ASTM A 36/A 36M.
   b. Sheet steel: ASTM A570.
   c. Stainless steel sheet: ASTM A167, Type 302/304.
   d. Checkered Steel Floor Plates: FS QQ-F-461C(1), Class 1.
   e. Steel tubing: ASTM A 53, schedule 40.
   f. Bolts, nuts and washers: ASTM A 307.
   g. Grout: Non-shrink non-metallic grout.
   h. Concrete inserts: Galvanized ferrous castings.
   i. Steel Tubing: ASTM A 500, Grade B
   j. Plates: ASTM A 283/A 283 M
   k. Pipe: ASTM A 53, Grade B, Sched 40
   l. Extruded Aluminum: ASTM B 221, Alloy 6063, Temper T6
   m. Sheet Aluminum: ASTM B 209, Alloy 6063, Temper T6
   n. Aluminum-Alloy Drawn Seamless Tubes: ASTM B 210, Alloy 6063, Temper T6
   o. Aluminum-Alloy Bars: ASTM B 211, Alloy 6063, Temper T6
   p. Bolts and Nuts: ASTM A 307 and ASTM A 563
   q. Screws: ASTM B 186.3
   r. Expansion Anchors: ASTM B 633, capable to sustain, without failure, a load capacity equal to 6 times the load imposed when installed in unit masonry and 4 times when installed in concrete as determined by testing per ASTM E 488
   s. Welding Materials: AWS D1.1 of the type required for materials being welded.
   t. Concrete for Landings and Treads: Portland cement Type I, 4000 psi 28 day strength, 3 to 5 in slump.
   u. Landing Concrete Reinforcement: Mesh type galvanized.

2. Galvanized ferrous metal items at exterior and where exposed to weather; 1 coat primer (shop-applied) elsewhere.
   a. Galvanizing: ASTM A 386.
   b. Primer Paint: Fabricator's standard gray primer, 2.0 mils thickness.
   c. Galvanizing repair compound.

Fabrication:

1. Corner Guards And Shields: Corner guards and shields for jambs and sills of openings and edges of platforms shall be steel shapes and plates anchored in masonry or concrete with welded steel straps or end weld stud anchors. Corner guards for use with glazed or ceramic tile finish on walls shall be formed of 0.0625 inches thick corrosion-resisting steel with polished or satin finish, shall extend 5 feet above the top of cove base or to the top of the wainscot, whichever is less, and shall be securely anchored to the supporting wall. Corner guards on exterior shall be galvanized. Corner guards for Kitchens shall be stainless steel.

2. Pipe Guards (Bollards): Pipe guards shall be heavy duty steel pipe conforming to ASTM A 53/A 53M, Type E or S, weight STD, black finish.

3. Floor Gratings And Frames: Carbon steel and Aluminum grating shall be designed in accordance with NAAMM MBG 531 to meet the indicated load requirements. Edges shall be banded with bars ¼ inch less in height than bearing bars for grating sizes above 3/4 inch. Banding bars shall be flush with the top of bearing grating. Frames shall be of welded steel construction finished to match the grating. Steel floor gratings and frames shall be galvanized after fabrication. Aluminum grating shall be alloy 6063-T6 conforming to ASTM B 221. Grating shall conform to NAAMM metal Bar Grating Manual designated ANSI/NAAMM MBG 531. Grating Type shall be Rectangular Bar SG Series. Provide aluminum saddle clips for grating hold down.

4. Floor Plates: Floor plates shall be 6 mm thick, raised pattern steel galvanized.

5. Handrails: Handrails shall be designed to resist a concentrated load of 200 lbs in any direction at any point of the top of the rail or 20 lbs/foot applied horizontally to top of the rail, whichever is more severe. Steel handrails, including inserts in concrete, shall be steel pipe conforming to ASTM A 53/A 53M or structural tubing conforming to ASTM A 500, Grade A or B of equivalent strength. Steel railings shall be 1 ½ inches nominal size. Railings shall be hot-dip galvanized and shop painted primed. Pipe collars shall be hot-dip galvanized steel. Joint posts, rail, and corners shall be fabricated by one of the following methods:
   1) Flush type rail fittings of commercial standard, welded and ground smooth with railing splice locks secured with hexagonal recessed-head set screws.
   2) Mitered and welded joints by fitting post to top rail and intermediate rail to post, mitering corners, groove welding joints, and grinding smooth. Railing splices shall be butted and reinforced by a tight fitting interior sleeve not less than 6 inches long.
   3) Railings may be bent at corners in lieu of jointing, provided bends are made in suitable jigs and the pipe is not crushed.
   4) Removable sections, toe-boards, and brackets shall be provided as indicated.

5. Ladders: Ladders shall be galvanized steel or aluminum, fixed rail type in accordance with ANSI A14.3.

6. Miscellaneous: Miscellaneous plates and shapes for items that do not form a part of the structural steel framework, such as lintels, sill angles, miscellaneous mountings, and frames, shall be provided to complete the work.

7. Partitions, Diamond Mesh Type: Partitions shall be constructed of metal fabric attached to structural steel framing members. Fabric shall be 10 gauge steel wires woven into 1 ½ inch diamond mesh with wire secured through weaving channels. Framing members shall be channels 1 ½ inch by 3/8 inch minimum size. Channel frames shall be mortised and tenoned at intersections. Steel frames, posts, and intermediate members shall be of the sizes and shapes indicated. Cast-iron floor shoes and caps shall have set screw adjustment. Doors and grilles shall be provided as indicated, complete with hardware and accessories including sliding mechanisms, locks, guard plates, sill shelves and brackets, and fixed pin butts. Doors and grilles shall have cover plates as indicated. Dutch doors shall have a lock for each leaf. A continuous rubber bumper shall be provided at bottom of grille frame. Locks shall be bronze, cylinder, mortise type. Keying shall be coordinated with Section 08710 HARDWARE. Ferrous metal portions of partitions and accessories shall be galvanized.

8. Steel Door Frames: Steel door frames built from structural shapes shall be neatly mitered and securely welded at the corners with all welds ground smooth. Jambs shall be provided with 2 by 1/4 by 12 inch bent, adjustable metal anchors spaced not over 2 feet 6 inch on centers. Provision shall be made to stiffen the top member for all spans over3 foot. Continuous door stops shall be made of 1-1/2 by 5/8 inch bars.

9. Trench Covers, Frames, And Liners: Trench grating shall be ductile iron load capacity Class C, heavy duty. Trench frames and anchors shall be all welded steel construction designed to match cover. Grating opening

widths shall not exceed 1 inch. The channel for trench drain shall have a built-in slope of 1/8 inch per foot. The channels shall be constructed of minimum 1/8 inch thick fiberglass.

10. Dissimilar Materials: Where dissimilar materials are in contact, or where aluminum is in contact with concrete, mortar, masonry, wet or pressure treated wood, or absorptive materials subject to wetting, the surfaces shall be protected with a coat of bituminous paint or asphalt varnish.

11. Trash Guard: Trash Guards shall be ASTM A 283 minimum 3/4 inch galvanized steel bars, transverse and longitudinal spacing as indicated on the drawings and welded a each bar intersection.

12. Concrete-Filled Metal Pan Stairs And Landings: Steel stairs shall be complete with structural or formed channel stringers, metal pan cement-filled treads or grating treads as indicated on the drawings, landings, columns, handrails, and necessary bolts and other fastenings as indicated. Structural steel shall conform to ASTM A 36/A 36M. Stairs and accessories shall be galvanized and factory primed coated. Risers on stairs with metal pan treads shall be deformed to form a sanitary cove to retain the tread concrete. Integral nosings shall have braces extended into the concrete fill. Gratings for treads and landings shall conform to NAAMM MBG 531. Grating treads shall have slip-resistant nosings.

13. Welded Wire Fabric: Welded wire fabric where indicated at stair rails shall be constructed of metal fabric attached to steel framing members. Fabric shall be 10 gauge welded wire mesh, hot dipped galvanized, factory primed, steel wires woven into 1-1/2 inch diamond mesh.

DIVISION 6 - WOOD AND PLASTICS

SECTION 06100 - ROUGH CARPENTRY

Scope: 1. Provide rough carpentry work:
- a. Wood framing.
- b. Sheathing.
- e. Nailers, blocking, and furring.
- a. Equipment backing panels.
- b. Roof curbs and cants.
- c. Blocking in wall and roof openings
- d. Wood furring and grounds
- e. Concealed wood blocking for support of toilet and bath accessories and wall cabinets.
- f. Preservative treatment of wood.
- g. Fire Retardant treatment of wood where required

References: 1. The publications referenced above (or below) establish minimum requirements for materials, systems and execution which may be specified in this Section.

AMERICAN FOREST & PAPER ASSOCIATION (AF&PA)

AF&PA T01	National Design Specification for Wood Construction
AF&PA T11	Manual for Wood Frame Construction

AMERICAN HARDBOARD ASSOCIATION (AHA)

AHA A194.1	Cellulosic Fiber Board

AMERICAN SOCIETY FOR TESTING AND MATERIALS (ASTM)

ASTM A 307	Carbon Steel Bolts and Studs, 60 000 PSI Tensile Strength
ASTM C 79/C 79M	Treated Core and Nontreated Core Gypsum Sheathing Board
ASTM C 518	Steady-State Heat Flux Measurements and Thermal Transmission Properties By Means of the Heat Flow Meter Apparatus
ASTM C 1177/C 1177M	Glass Mat Gypsum Substrate for Use as Sheathing
ASTM D 2898	Accelerated Weathering of Fire-Retardant-Treated Wood for Fire Testing
ASTM F 547	Definitions of Terms Relating to Nails for Use with Wood and Wood-Base Materials

AMERICAN WOOD-PRESERVERS' ASSOCIATION (AWPA)

AWPA C2	Lumber, Timber, Bridge Ties and Mine Ties - Preservative Treatment by Pressure Processes
AWPA C9	Plywood - Preservative Treatment by Pressure Processes
AWPA C20	Structural Lumber Fire-Retardant Pressure Treatment
AWPA C27	Plywood - Fire-Retardant Pressure Treatment
AWPA M4	Standard for the Care of Preservative-Treated Wood Products
AWPA P5	Standards for Waterborne Preservatives

CALIFORNIA REDWOOD ASSOCIATION (CRA)

CRA RIS-01-SS	Standard Specifications for Grades of California Redwood Lumber

U.S. DEPARTMENT OF COMMERCE (DOC)

DOC PS 1	Voluntary Product Standard - Construction and Industrial Plywood
DOC PS 2	Performance Standards for Wood-Based Structural-Use Panels

FACTORY MUTUAL ENGINEERING AND RESEARCH (FM)

FM LPD 1-49	Loss Prevention Data Sheet - Perimeter Flashing

NATIONAL HARDWOOD LUMBER ASSOCIATION (NHLA)

NHLA Rules	Rules for the Measurement & Inspection of Hardwood & Cypress

NORTHEASTERN LUMBER MANUFACTURERS ASSOCIATION (NELMA)

NELMA Grading Rules	Standard Grading Rules for Northeastern Lumber

SOUTHERN CYPRESS MANUFACTURERS ASSOCIATION (SCMA)

SCMA Specs	Standard Specifications for Grades of Southern Cypress

SOUTHERN PINE INSPECTION BUREAU (SPIB)

SPIB Rules	Standard Grading Rules for Southern Pine Lumber

WEST COAST LUMBER INSPECTION BUREAU (WCLIB)

WCLIB Std 17 Grading Rules for West Coast Lumber

WESTERN WOOD PRODUCTS ASSOCIATION (WWPA)

WWPA Grading Rules Western Lumber Grading Rules 95

Submittals:

1. Product Data:

2. Certificates:
   a. Grading and Marking: Manufacturer's certificates (approved by an American Lumber Standards approved agency) attesting that lumber and material not normally grade marked meet the specified requirements. Certificate of Inspection for grade marked material by an American Lumber Standards Committee (ALSC) recognized inspection agency prior to shipment.

Products:

1. Lumber, finished 4 sides, 15% maximum moisture content:
   a. Solid sawn and finger-jointed lumber shall bear an authorized grade stamp or grade mark recognized by ALSC, or an ALSC recognized certification stamp, mark, or hammer brand. Surfaces that are to be exposed to view shall not bear grade marks, stamps, or any type of identifying mark. Hammer marking will be permitted on timbers when all surfaces will be exposed to view
   b. Light framing: Construction grade Douglas fir or southern pine, appearance grade where exposed.
   c. Structural framing and timbers: No. 1 grade Douglas fir or southern pine, appearance grade where exposed.
   d. Boards: Construction grade.

2. Wood for nailers, blocking, and furring: Blocking shall be standard or number 2 grade, finished 4 sides, 15% maximum moisture content. Pressure preservative treat items in contact with roofing, flashing, waterproofing, masonry, concrete or the ground.

3. Plywood, APA rated for use and exposure:
   a. Materials shall bear the grade mark or other identifying marks indicating grades of material and rules or standards under which produced, including requirements for qualifications and authority of the inspection organization. Except for plywood and wood structural panels, bundle marking will be permitted in lieu of marking each individual piece. Surfaces that are to be exp osed to view shall not bear grade marks or other types of identifying marks.

4. Sheathing shall be fiberboard, gypsum board, or plywood, for wall sheathing as indicated on the drawings; and plywood, wood structural panels, or gypsum board, for roof sheathing as indicated on the drawings.
   a. Fiberboard shall conform to ASTM C 208, Type IV, Grade 2, Structural Grade, or AHA A194.1, Type IV, Grade 2 asphalt impregnated or asphalt coated to be water-resistant but vapor permeable.
   b. Glass mat gypsum sheathing shall conform to ASTM C 79/C 79M and ASTM C 1177/C 1177M.
   c. Gypsum board shall conform to ASTM C 79/C 79M, 1/2 inch thick, 4 feet wide with straight edges for supports 16 inches on center without corner bracing of framing or for supports 24 inches with V-tongue and groove edges for supports 16 or 24 inches on center with corner bracing of framing.
   d. Plywood shall conform to DOC PS 1, APA PRP-108 or DOC PS 2, Grade C-D or sheathing grade with exterior glue. Sheathing for roof and walls without corner bracing of framing shall have a span rating of 16/0 or greater for supports 400 mm on center and a span rating of 24/0 or greater for supports 24 inches on center

5. Anchor Bolts shall conform to ASTM A 307, size as indicated, complete with nuts and washers.

6. Nails and Staples shall conform to ASTM F 547, size and type best suited for purpose; staples shall be as recommended by the manufacturer of the materials to be joined.

7. Nails used with treated lumber and sheathing shall be galvanized. Nailing shall be in accordance with the recommended nailing schedule contained in AF&PA T11. Where detailed nailing requirements are not specified, nail size and spacing shall be sufficient to develop an adequate strength for the connection. The connection's strength shall be verified against the nail capacity tables in AF&PA T01

8. Building Paper: No.15 asphalt felt.

9. Air-Infiltration Barrier: Micro perforated polyethylene air infiltration barrier; DuPont "Tyvik", Celotex "Tuff-Wrap", Reemay "Typar" or equal.

10. Wood Treatment:
    a. Preservative treatment: Pressure-treated with waterborne preservatives, to comply with AWPA -C2 (Lumber) and C9 (Plywood) with waterborne preservatives listed in AWPA P5, as applicable. Kiln dry to 15% max. moisture content.
    b. Exposed areas of treated wood that are cut or drilled after treatment shall receive a field treatment in accordance with AWPA M4. Items of all-heart material of cedar, cypress, or redwood will not require preservative treatment, except when in direct contact with soil. Except as specified for all-heart material of the previously mentioned species, the following items shall be treated:
        1) Wood members in contact with or within 18 inches of soil.
        2) Wood members in contact with water.
        3) Wood members exposed to the weather including those used in built up roofing systems or as nailing strips or nailers over fiberboard or gypsum-board wall sheathing as a base for wood siding.
        4) Wood members set into concrete regardless of location, including flush-with-deck wood nailers for roofs.
        5) Wood members in contact with concrete that is in contact with soil or water or that is exposed to weather.

    c. Fire-retardant treatment: Pressure impregnated, to comply with AWPA C20 (lumber) and C27 (plywood); provide where indicated and where required by code. Fire-retardant treated plywood will not be used in any part of the roof or roofing system
        1) Material use shall be defined in AWPA C20 and AWPA C27 for Interior Type A and B and Exterior Type. Treatment and performance inspection shall be by an independent and qualified testing agency that establishes performance ratings

SECTION 06600 – PLASTIC FABRICATIONS

Scope: 1. Solid Surfacing

References: 1. The publications referenced above (or below) establish minimum requirements for materials, systems and execution which may be specified in this Section.

AMERICAN NATIONAL STANDARDS INSTITUTE (ANSI)

ANSI A136.1	Organic Adhesives for Installation of Ceramic Tile
ANSI Z124.3	Plastic Lavatories
ANSI Z124.6	Plastic Sinks

Submittals: 1. Product Data: Product data indicating product description, fabrication information, and compliance with specified performance requirements for solid polymer, joint adhesive, sealants, and heat reflective tape. Both the manufacturer of materials and the fabricator shall submit a detailed description of operations and

processes in place that support efficient use of natural resources, energy efficiency, emissions of ozone depleting chemicals, management of water and operational waste, indoor environmental quality, and other production techniques supporting sustainable design and products.

2. Samples: Sample of each color and pattern for approval. Samples shall indicate full range of color and pattern variation. Approved samples shall be retained as a standard for this work

3. Test Reports: Test report results from an independent testing laboratory attesting that the submitted solid polymer material meets or exceeds each of the specified performance requirements.

4. Certificates: Solid polymer manufacturer's certification attesting to fabricator qualification approval.

5. Operations and Maintenance Data: A minimum of six copies of maintenance data indicating manufacturer's care, repair and cleaning instructions. Maintenance video shall be provided. Maintenance kit for matte finishes shall be submitted.

Products: 1. Solid Polymer Material shall be a homogeneous filled solid polymer; not coated, laminated or of a composite construction; meeting ANSI Z124.3 and ANSI Z124.6 requirements. Material shall have minimum physical and performance properties specified. Superficial damage to a depth of 0.01 inch shall be repairable by sanding or polishing. Material thickness shall be1/2 inches. In no case shall material be less than 6 mm in thickness (vertical surfaces only). Color shall be as selected by the Architect and approved by the Government.

2. Cultured Marble: CMI certified cultured marble window sills shall conform to ANSI Z124,3 and CMI LS2-76 and having a minimum 18 mils gelcoat. Cultured marble window sills polyester resin based, inert mineral filled one piece units and a minimum of 5/8 inch thick with eased edges. Color shall be as selected by the Architect and approved by the Government.

3. Adhesives as recommended by the manufacturer.

DIVISION 7 - THERMAL AND MOISTURE PROTECTION

SECTION 07110 – BITUMINOUS DAMPPROOFING

Scope: 1. Bituminous dampproofing applied to CMU back-up wall in cavity wall construction.

References: 1. The publications referenced above (or below) establish minimum requirements for materials, systems and execution which may be specified in this Section.

AMERICAN SOCIETY FOR TESTING AND MATERIALS (ASTM)

ASTM D 41	Asphalt Primer Used in Roofing, Dampproofing, and Waterproofing
ASTM D 1227	Emulsified Asphalt Used as a Protective Coating for Roofing
ASTM D 4479	Asphalt Roof Coatings - Asbestos Free

Submittals: 1. Product Data: Product data indicating product description, fabrication information, and compliance with specified performance requirements

2. Certificates: Certificates attesting that the materials meet the requirements specified.

Products: 1. Emulsion-Based Asphalt Dampproofing:

a. Fibrated Emulsion-Based Asphalt: Fibrated emulsion-based asphalt dampproofing shall be cold-applied type conforming to ASTM D 1227 Type IV, asbestos-free, manufactured of refined asphalt, emulsifiers and selected clay, fibrated with mineral fibers. For spray or brush application, emulsion shall contain a minimum of 59 percent solids by weight, 56 percent solids by volume. For trowel application, emulsion shall contain a minimum of 58 percent solids by weight, 55 percent solids by volume.

2. Solvent-Based Asphalt Dampproofing:
   a. Asphaltic Primer: Primer for cold-applied solvent-based asphalt dampproofing shall conform to ASTM D 41, asbestos-free, non-fibrated, manufactured with highly ductile soft asphalts and selected hydrocarbons.
   b. Fibrated Asphalt: Fibrated solvent-based asphalt dampproofing shall be cold-applied type conforming to ASTM D 4479 Type I, asbestos-free, manufactured with selected asphalts, stabilizers, mineral spirits and fibrated with mineral fibers. Solvent-based asphalt shall contain 72 percent solids by weight, 65 percent solids by volume.

SECTION 07130 – BITUMINOUS WATERPROOFING

Scope: 1. Bituminous waterproofing for below grade use and waterproofing for work specified in Section 09310 CERAMIC TILE

References: 1. The publications referenced above (or below) establish minimum requirements for materials, systems and execution which may be specified in this Section.

AMERICAN SOCIETY FOR TESTING AND MATERIALS (ASTM)

ASTM D 41	Asphalt Primer Used in Roofing, Dampproofing, and Waterproofing
ASTM D 173	Bitumen-Saturated Cotton Fabrics Used in Roofing and Waterproofing
ASTM D 449	Asphalt Used in Dampproofing and Waterproofing
ASTM D 1327	Bitumen-Saturated Woven Burlap Fabrics Used in Roofing and Waterproofing
ASTM D 1668	Glass Fabrics (Woven and Treated) for Roofing and Waterproofing
ASTM D 4586	Asphalt Roof Cement, Asbestos Free

Submittals: 1. Product Data:
   a. Manufacturer's data including technical information which indicates full compliance with this section.
   b. Manufacturer's installation instructions, before delivery of materials to the site. Instructions shall specify acceptable range of asphalt application temperatures and the maximum temperature for holding asphalt in a heated condition.

2. Certificates: Certificates from manufacturer attesting that asphalt manufactured and shipped to jobsite meets the specified requirements.

Products: 1. Asphalt Waterproofing
   a. Primer for hot-applied asphalt waterproofing shall conform to ASTM D 41, asbestos-free, non-fibrated, manufactured with highly ductile soft asphalts and selected hydrocarbons.
   b. Below-Grade Hot-Applied Asphalt: Hot-applied asphalt for below-grade applications shall conform to ASTM D 449, Type I, asbestos-free, manufactured from crude petroleum, suitable for use with membrane waterproofing systems
   c. Reinforcement Fabrics:
      1) Cotton Fabrics: Cotton fabrics shall be woven entirely of cotton conforming with ASTM D 173, thoroughly and uniformly saturated with asphalt.
      2) Woven Burlap Fabrics: Woven burlap fabrics shall be composed of 100 percent jute fiber and two

cotton threads at each selvage conforming with ASTM D 1327, thoroughly and uniformly saturated with asphalt. The fabric mesh shall not be completely closed or sealed by the process of saturation. Sufficient porosity shall be maintained to allow successive moppings of the plying asphalt to seep through. The surface shall not be coated or covered with talc or any other substances that will interfere with the adhesion between fabric and plying asphalt. The fabric surface shall be uniformly smooth and free of irregularities, folds and knots. The finished woven burlap fabrics shall be free of ragged edges, untrue edges, breaks or cracks, and other visible external defects.

3) Glass Fabrics: Glass fabrics shall conform to ASTM D 1668 Type I, asphalt-treated woven glass waterproofing fabrics coated with asphalt.

d. Flashing Cement: Flashing cement shall conform to ASTM D 4586, Type I, trowel grade, asbestos free, manufactured from asphalts characterized as adhesive, healing and ductile.

e. Insulation Boards: Insulation boards shall conform to ASTM C 208 cellulosic fiber boards, construction grade, 1/2 inch thick, fibrous-felted homogeneous panel. Insulation boards shall be manufactured from ligno-cellulosic fibers (wood or cane) by a felting or molding process, asphalt-saturated or coated, with a density of 10 to 31 lbs. per square foot. Surfaces of insulation boards shall be free of cracks, lumps, excessive departure from planeness, or other defects that adversely affect performance.

SECTION 07210 – BUILDING INSULATION

Scope:

1. Provide building insulation of types as applicable:
   a. Board insulation at perimeter foundation wall.
   b. Board insulation at exterior walls.
   c. Blanket/batt insulation.
   d. Fire safing insulation.
   e. Glass fiberboard insulation.
   f. Sound attenuation insulation.

2. Provide vapor barrier at building perimeter.

References:

1. The publications referenced above (or below) establish minimum requirements for materials, systems and execution which may be specified in this Section.

AMERICAN HARDBOARD ASSOCIATION (AHA)

AHA A194.1	Cellulosic Fiber Board

AMERICAN SOCIETY FOR TESTING AND MATERIALS (ASTM)

ASTM C 208	Cellulosic Fiber Insulating Board
ASTM C 578	Rigid, Cellular Polystyrene Thermal Insulation
ASTM C 591	Unfaced Preformed Rigid Cellular Polyisocyanurate Thermal Insulation
ASTM C 612	Mineral Fiber Block and Board Thermal Insulation
ASTM C 665	Mineral-Fiber Blanket Thermal Insulation for Light Frame Construction and Manufactured Housing
ASTM C 1177/C 1177M	Glass Mat Gypsum Substrate for Use as Sheathing
ASTM C 1289	Faced Rigid Cellular Polyisocyanurate Thermal Insulation Board

Submittals:

1. Product Data

2. Certificates: Certificate attesting that the expanded perlite or polyisocyanurate insulation contains recovered

material and showing estimated percent of recovered material. Certificates of compliance for felt materials.

Products: 1. Insulation: Thermal resistance of insulation shall be not less than R-values shown. R-values shall be determined at 75 degrees F in accordance with ASTM C 518. Contractor shall comply with EPA requirements in conformance with RECYCLED / RECOVERED MATERIALS. Insulation shall be the standard product of a manufacturer and factory marked or identified with manufacturer's name or trademark and R-value. Identification shall be on individual pieces or individual packages. Materials containing more than one percent asbestos will not be allowed.

a. Batt or Blanket:
   1) Glass Fiber Batts and Rolls: Glass fiber batts and rolls shall conform to ASTM C 665, Type I unfaced insulation. Insulation shall have a 10 mil thick, white, puncture resistant woven-glass cloth with vinyl facing on one side. Width and length shall suit construction conditions.
   2) Mineral Fiber Batt: Mineral fiber batt shall conform to ASTM C 665, Type I unfaced insulation.

b. Rigid Insulation:
   1) Polystyrene Board: Polystyrene board shall be extruded and conform to ASTM C 578, Type IV.
   2) Polyurethane or Polyisocyanurate Board: Polyurethane or polyisocyanurate board shall have a minimum recovered material content of 9 percent by weight of core material in the polyurethane or polyisocyanurate portion. Unfaced preformed polyurethane shall conform to ASTM C 591. Faced polyisocyanurate shall conform to ASTM C 1289.
   3) Glass Fiber or Insulation Board: Glass mat gypsum roof board shall conform to ASTM C 1177/C 1177M, flame spread 0, smoke developed 0, psi 500, water resistant. Glass fiber or insulation board shall conform to ASTM C 612, Type 1A with a minimum recovered material content of 9 percent by weight of glass fiber core material.

2. Vapor Retarder: Vapor retarder shall be polyethylene sheeting conforming to ASTM E 154 or other equivalent material. Vapor retarder shall have a maximum vapor permeance rating of 0.5 perms as determined in accordance with ASTM E 96, unless otherwise specified.

3. Air Infiltration Barrier: Air infiltration barrier shall be building paper meeting the requirements of ASTM C 1136, Type IV, style optional or a tear and puncture resistant olefin building wrap (polyethylene or polypropylene) with a moisture vapor transmission rate of 28 perms in accordance with ASTM E 96.

SECTION 07220 – ROOF AND DECK INSULATION

Scope: 1. Insulation for use beneath built-up, modified bitumen roofing.

References: 1. The publications referenced above (or below) establish minimum requirements for materials, systems and execution which may be specified in this Section.

AMERICAN NATIONAL STANDARDS INSTITUTE (ANSI)

ANSI A208.1	Particleboard Mat Formed Woods

AMERICAN SOCIETY FOR TESTING AND MATERIALS (ASTM)

ASTM C 208	Cellulosic Fiber Insulating Board
ASTM C 552	Cellular Glass Thermal Insulation
ASTM C 726	Mineral Fiber Roof Insulation Board
ASTM C 728	Perlite Thermal Insulation Board
ASTM C 1050	Rigid Cellular Polystyrene-Cellulosic Fiber Composite Roof Insulation
ASTM C 1289	Faced Rigid Cellular Polyisocyanurate Thermal Insulation Board

ASTM D 41	Asphalt Primer Used in Roofing, Dampproofing, and Waterproofing
ASTM D 226	Asphalt-Saturated Organic Felt Used in Roofing and Waterproofing
ASTM D 312	Asphalt Used in Roofing
ASTM D 2178	Asphalt Glass Felt Used in Roofing and Waterproofing
ASTM D 4586	Asphalt Roof Cement, Asbestos Free
ASTM D 4897	Asphalt-Coated Glass-Fiber Venting Base Sheet Used in Roofing

FACTORY MUTUAL ENGINEERING AND RESEARCH (FM)

FM P9513	Loss Prevention Data for Roofing Contractors
FM P7825a	Approval Guide Fire Protection
FM P7825c	Approval Guide Building Materials

UNDERWRITERS LABORATORIES (UL)

UL Building Materials Directory	Building Materials Directory

Fire Classification:

1. Insulation shall have been tested as part of a roof construction assembly of the type used in this project, and the construction shall be listed as Fire-Classified in UL Bld Mat Dir or Class I in FM P7825a, except for installation on poured concrete decks or precast concrete roof deck panels.

Submittals:

1. Product Data

2. Certificates: Certificate attesting that the expanded perlite or polyisocyanurate insulation contains recovered material and showing estimated percent of recovered material. Certificates of compliance for felt materials.

Products:

1. Bituminous Materials: Bituminous materials shall conform to the following requirements:
   a. Asphalt Bitumen: ASTM D 312, Type III or IV. Asphalt flash point, finished blowing temperature, and equiviscous temperature (EVT) for mop and for mechanical spreader application shall be indicated on bills of lading or on individual containers.
   b. Asphalt Cement: ASTM D 4586, Type I for surfaces sloped from 0 to 3 inches per foot; Type II for slopes greater than 3 inches per foot.
   c. Asphalt Primer: ASTM D 41.

2. Insulation: Insulation shall be a standard product of the manufacturer and shall be factory marked with the manufacturer's name or trade mark, the material specification number, the R-value at 75 degrees F, and the thickness. Minimum thickness shall be as recommended by the manufacturer. Boards shall be marked individually. The thermal resistance of insulation shall be not less than the R-value shown on the drawings. The insulation manufacturing process shall not include chlorofluoro carbons (CFC) or formaldehydes. Contractor shall comply with EPA requirements for recycled/recovered materials. Insulation shall be one, or a combination of the following materials:
   a. Cellular Glass: ASTM C 552, Type IV.
   b. Composite Board Insulation: ASTM C 1050 or ASTM C 1289 Type III, or ASTM C 1289 Type VI. Perlite, in composite board, may be replaced with ANSI A208.1 wood fiberboard, 7/16 inch minimum thickness, provided that the composite board meets specified physical requirements. Composite board with wood fiberboard shall conform to ASTM C 1289, Type V.
   c. Expanded-Perlite Insulation Board: ASTM C 728 with a minimum recovered material content of 23 percent of the expanded perlite portion of the board.
   d. Fiberboard: ASTM C 208 Type II, Grade 1 roof insulating board with a minimum recovered material content of 80 percent, treated with sizing, wax or bituminous impregnation. Bituminous impregnation shall be limited to 4 percent by weight when used over steel decks.
   e. Mineral-Fiber Insulation Board: ASTM C 726.

f. Polyisocyanurate: ASTM C 1289, Type I, or ASTM C 1289 Type II, having minimum recovered material content of 9 percent by weight of the polyisocyanurate portion of the board.

3. Fasteners: Fasteners shall be specifically designed screws and plates or spikes and plates of sufficient length to hold insulation securely in place. Fasteners shall conform to insulation manufacturer's recommendations except that holding power, when driven, shall be not less than 120 pounds each in steel deck. Fasteners for steel or concrete decks shall conform to FM P7825c for Class I roof deck construction, and shall be spaced to withstand an uplift pressure of 90 lbs. per square foot.

4. Venting Inorganic Base Sheet: ASTM D 4897, Type II, Non-perforated, with spot mopping holes where specified.

5. Glass Roofing Felt: ASTM D 2178, Type IV.

2. Organic Roofing Felt: ASTM D 226, Type I.

3. Wood Nailers: Wood nailers shall conform to Section 06100 ROUGH CARPENTRY, including preservative treatment. Edge nailers shall be not less than nominal 6 inch wide and of thickness to finish flush with the top surface of the insulation. Surface mounted nailers shall be a nominal 3 inch wide by the full thickness of the insulation.

SECTION 07311 - ASPHALT SHINGLES

Scope: 1. Provide Asphalt Shingles with felt underlayment, ridge vents, and accessories.

References: 1. The publications referenced above (or below) establish minimum requirements for materials, systems and execution which may be specified in this Section.

AMERICAN SOCIETY FOR TESTING AND MATERIALS (ASTM)

ASTM D 41 (1994) Asphalt Primer Used in Roofing, Dampproofing, and Waterproofing
ASTM D 224 (1989; R 1996) Smooth-Surfaced Asphalt Roll Roofing (Organic Felt)
ASTM D 226 (1997; Rev. A) Asphalt-Saturated Organic Felt Used in Roofing and Waterproofing
ASTM D 249 (1989; R 1996) Asphalt Roll Roofing (Organic Felt) Surfaced with Mineral Granules
ASTM D 1970 (2001) Self-Adhering Polymer Modified Bituminous Sheet Materials Used as Steep Roofing Underlayment for Ice Dam Protection
ASTM D 3018 (2000) Class A Asphalt Shingles Surfaced with Mineral Granules
ASTM D 3462 (2001) Asphalt Shingles Made from Glass Felt and Surfaced with Mineral Granules
ASTM D 4586 (2000) Asphalt Roof Cement, Asbestos Free
ASTM D 4869 (1988; R 1993) Asphalt-Saturated Organic Felt Shingle Underlayment Used in Roofing

NATIONAL ROOFING CONTRACTORS ASSOCIATION (NRCA)

NRCA Shingle Manual 1996 Asphalt Shingle Roofing Manual

UNDERWRITERS LABORATORIES (UL)
UL 790 (1997) Fire Resistance of Roof Covering Materials
UL 997 (1995) Wind Resistance of Prepared Roof Covering Materials

Warranty:

1. Manufacturer's Materials Warranty:
2. Roofing Installer's Warranty: Five years.

Submittals:

1. Product Data

Products:

1. Glass-Fiber-Reinforced Asphalt Shingles: Laminated-strip type.
   a. Hip and Ridge Shingles: Standard units.

2. Underlayment: Organic felts.

   a. Granular-surfaced valley lining.

3. Ridge Vents: Rigid UV-stabilized plastic.

4. Metal Flashing and Trim: Copper
   a. Types: Apron flashings, step flashings, cricket flashings, backer flashings, open valley flashings, drip edges, and vent pipe flashings.

SECTION 07551 - MODIFIED BITUMEN ROOFING

Scope: 1. Modified bitumen roofing system shall consist of a manufacturer's standard, prefabricated, reinforced polymer-modified bitumen membrane, with base sheet, and insulation for use over pre-cast gypsum, lightweight insulating concrete, structural concrete, wood, and insulation surfaces

References: 1. The publications referenced above (or below) establish minimum requirements for materials, systems and execution which may be specified in this Section.

AMERICAN SOCIETY FOR TESTING AND MATERIALS (ASTM)

ASTM C 208	Cellulosic Fiber Insulating Board
ASTM C 1153	Location of Wet Insulation in Roofing Systems Using Infrared Imaging
ASTM D 41	Asphalt Primer Used in Roofing, Dampproofing, and Waterproofing
ASTM D 312	Asphalt Used in Roofing
ASTM D 517	Asphalt Plank
ASTM D 1863	Mineral Aggregate Used on Built-Up Roofs
ASTM D 2824	Aluminum-Pigmented Asphalt Roof Coatings, Non-Fibered, Asbestos Fibered, and Fibered without Asbestos
ASTM D 4586	Asphalt Roof Cement, Asbestos Free
ASTM D 4601	Asphalt-Coated Glass Fiber Base Sheet Used in Roofing
ASTM D 4897	Asphalt-Coated Glass-Fiber Venting Base Sheet Used in Roofing
ASTM D 6162	Styrene Butadiene Styrene (SBS) Modified Bituminous Sheet Materials Using a Combination of Polyester and Glass Fiber Reinforcements
ASTM D 6163	Styrene Butadiene Styrene (SBS) Modified Bituminous Sheet Materials Using Glass Fiber Reinforcements
ASTM D 6164	Styrene Butadiene Styrene (SBS) Modified Bituminous Sheet Materials Using Polyester Reinforcements

FACTORY MUTUAL ENGINEERING AND RESEARCH (FM)

FM P7825c Approval Guide Building Materials

UNDERWRITERS LABORATORIES (UL)

UL Building Material Directory Building Materials Directory
UL 790 Tests for Fire Resistance of Roof Covering Materials
UL 1256 Fire Test of Roof Deck Constructions

Submittals:

1. Product Data:
   a. EVT and Flash Point; Bills of lading shall indicate the flash point and equiviscous temperature (EVT) and this information shall be shown on labels for each unit (or plug) of asphalt.
   b. Materials and Installation; Manufacturer's instructions, including membrane description and performance data, detailed procedure for installation, and safety precautions, prior to the start of roofing work.

2. Certificates:
   a. Manufacturer; Evidence that the manufacturer has a minimum of 10 years experience manufacturing modified bitumen roofing. The roofing system applicator shall be approved by the modified bitumen roofing manufacturer, and shall have a minimum of 5 years experience as an approved applicator. A list of installations using the same products and applicator as proposed shall be included.
   a. Materials; Certificates of compliance for felts, bitumens, and membrane sheet.

General Requirements:

1. The modified bitumen roofing system shall consist of a manufacturer's standard, prefabricated, reinforced polymer-modified bitumen membrane, one or two plies as recommended by the manufacturer with base sheet, and insulation as specified and indicated. The manufacturer shall have a minimum of 10 years experience in manufacturing of the proposed modified bitumen sheet roofing for similar applications.

2. The complete roof system shall have a UL 790, Class A or B classification, be listed as "fire classified" in UL Building Material Directory, and bear the UL label or be listed as a Class I – 90 Roof Deck in FM P7825c. Roofing system over steel deck shall be rated, minimum, Class I- 90 in accordance with FM P7825c. Ratings from other independent laboratories may be substituted provided that the tests, requirements and ratings are documented to be equivalent, to the satisfaction of the Contracting Officer.

3. Air temperature shall be above 40 degrees F and there shall be no visible ice, frost, or moisture on the roof deck at the time roofing is installed. In cold climates roofing shall not be applied when air temperature is less than 20 degrees F. When air temperature is less than, 40 degrees F, kettles shall be insulated, felts and sheets shall be kept warm, and the application site shall be protected.

4. Flame Heated Equipment (Where allowed): Flame heated kettles shall not be placed on the roof. Torch application shall be approved by the membrane manufacturer for the specific modified bitumen. Open flame equipment shall not be left unattended while ignited.

5. Electric-Heated Equipment: Adequate electrical service shall be provided as required by the manufacturer of the equipment, to insure proper application of the roofing materials.

Warranty:

1. Manufacturer's standard warranty for the roofing system shall be provided for not less than 10 years from acceptance of the work. Warranty shall state that manufacturer shall repair or replace defective materials if the roofing system leaks or allows the insulation beneath the membrane to become wet during the period of the warranty.

Products:

1. Primer: Primer shall conform to ASTM D 41.

2. Asphalt: Asphalt shall conform to ASTM D 312, Type III for slopes up to 25 percent (1/4 vertical/horizontal) and Type IV for slopes up to 50 percent (1/2 vertical/horizontal).

3. Bituminous Cement: Bituminous cement shall conform to ASTM D 4586.

4. Cants And Wood Nailers: Treated wood cants and wood nailers shall be of water-borne preservative-treated material as specified in Section 06100 ROUGH CARPENTRY. Cants shall be made from treated wood or treated fiberboard not less than 3-1/2 inches high and cut to reduce change in direction of the membrane to 45 degrees or less. Fiberboard shall conform to ASTM C 208, treated with sizing, wax or bituminous impregnation. When membrane or flashing is to be torch applied, cants shall be fire resistant.

5. Base Sheet: Venting inorganic felt base sheet shall conform to ASTM D 4897, Type II. Non venting base sheet shall conform to ASTM D 4601, Type II.

6. Modified Bitumen Sheet:Modified bitumen sheet shall be a [prefabricated styrene-butadiene-styrene modified bitumen sheet and shall comply with ASTM D 6163, Type II, Grade.

7. Nails And Fasteners: Nails and fasteners shall be an approved type recommended by the roofing felt or membrane manufacturer.

8. Surfacing Material: Surfacing shall be light colored, opaque, crushed stone or gravel conforming to ASTM D 1863 or factory applied granules requiring no further coating.

9. Adhesive: Adhesive shall be an approved type recommended by the membrane manufacturer.

10. Walkway Surfaces: Walkway surfaces shall be mineral surfaced modified bitumen cap sheet as recommended by the membrane manufacturer, mineral asphalt plank, ASTM D 517, minimum 3/4 inch thick, or concrete pavers, size as indicated, 1-1/2 inch minimum thickness, and made from 3000 psi air entrained concrete.

11. Insulation: Insulation shall be compatible with the membrane, as recommended by the membrane manufacturer's printed instructions, and as specified in Section 07220 ROOF INSULATION.

12. Coating: Aluminum coating shall conform to ASTM D 2824 Type I or III, or shall be as recommended by the membrane manufacturer.

Execution:

1. Asphalt shall not be heated higher than 75 degrees F above the EVT or 50 degrees F below the flash point or 525 degrees F (maximum) whichever is lower. EVT and flash point temperatures of asphalt in the kettle shall be conspicuously posted on the kettle. Heating kettle shall be provided with automatic thermostatic control and an accurate thermometer. Kettle operators shall be in attendance at all times during the heating to ensure that the maximum temperature specified is not exceeded. An asphalt tanker shall be treated as a kettle.

2. Fire Watch: When membrane or flashing is torch applied a Fire watch shall be provided continuously during and for at least 1 hour following torch application. At least two 2-1/2 gallon containers of water and two 15 pound carbon dioxide extinguishers shall be available during the fire watch. When work is interrupted, or at the end of a section of roofing, and at end of each day's work, areas which had been subjected to torch applications shall be surveyed with an infra-red sensing device. Hot spots shall be cooled and re-surveyed. If a hot spot persists, the roof shall be cut open and any smoldering shall be extinguished before the foreman leaves the site.

Infrared Inspection: 1. On large projects and eight months after completion of the roofing system, the Contractor shall inspect the roof surface using infrared (IR) scanning as specified in ASTM C 1153. Where the IR inspection indicates wet insulation, moisture content of the insulation shall be determined at sample cuts (including a sample from a suspected dry area). Wet insulation shall be replaced where the moisture content by weight exceeds the following values: wood fiber: 30 percent; glass fiber or perlite: 25 percent; polyisocyanurate: 260 percent. Wet insulation, overlying roofing and sample-cut areas shall be replaced as directed.

Inspection: 1. The Contractor shall establish and maintain an inspection procedure to assure compliance of the installed roofing with the contract requirements. Any work found not to be in compliance with the contract shall be promptly removed and replaced or corrected in an approved manner. Inspection shall include, but not be limited to, the following:

a. Observation of environmental conditions; number and skill level of roofing workers; start and end time of various tasks; condition of substrate.
b. Verification of compliance of materials before, during, and after installation.
c. Inspection of condition of equipment and accuracy of thermometers and metering devices.
d. Inspection of flashings, cants and curbs.
e. Inspection of membrane placement, including edge envelopes, widths of starter sheets, laps, proper use of squeegee, and mechanical fastening.
f. Inspection of application of bitumen, aggregate, and walkways.
g. Inspection of embedment of aggregate for required weight and coverage.
h. Cutout sampling and analysis as directed.
i. A roofing technician responsible directly to the Contractor and experienced in the construction of modified bitumen roofing systems shall perform the inspection functions and be on the site whenever roofing operations are in progress."

SECTION 07600 - FLASHING AND SHEET METAL

Scope: 1. Provide flashing and sheet metal components for building construction.

a. Masonry through-wall flashing.
b. Metal counter-flashing.
c. Built-in metal valleys, gutters, and scuppers.
d. Gutters and downspouts.
e. Miscellaneous sheet metal accessories.

References: 1. The publications referenced above (or below) establish minimum requirements for materials, systems and execution which may be specified in this Section.

AMERICAN SOCIETY FOR TESTING AND MATERIALS (ASTM)

ASTM B 32	Solder Metal
ASTM D 226	Asphalt-Saturated Organic Felt Used in Roofing and Waterproofing
ASTM D 543	Evaluating the Resistance of Plastics to Chemical Reagents
ASTM D 822	Conducting Tests on Paint and Related Coatings and Materials Using Filtered Open-Flame Carbon-Arc Exposure Apparatus
ASTM D 828	Tensile Properties of Paper and Paperboard Using Constant-Rate-of-Elongation-Apparatus
ASTM D 1784	Rigid Poly(Vinyl Chloride) (PVC) Compounds and Chlorinated Poly(Vinyl Chloride) (CPVC) Compounds
ASTM D 2822	Asphalt Roof Cement
ASTM D 4022	Coal Tar Roof Cement, Asbestos Containing
ASTM D 4586	Asphalt Roof Cement, Asbestos Free

ASTM E 96 Water Vapor Transmission of Materials

SHEET METAL & AIR CONDITIONING CONTRACTORS' NATIONAL ASSOCIATION (SMACNA)

SMACNA Arch. Manual Architectural Sheet Metal Manual

General Requirements:

1. Sheet metalwork shall be accomplished to form weathertight construction without waves, warps, buckles, fastening stresses or distortion, and shall allow for expansion and contraction. Cutting, fitting, drilling, and other operations in connection with sheet metal required to accommodate the work of other trades shall be performed by sheet metal mechanics. Application of bituminous strip flashing over various sheet metal items is covered in Section 07551 MODIFIED BITUMEN ROOFING. Installation of sheet metal items used in conjunction with roofing shall be coordinated with roofing work to permit continuous roofing operations. Sheet metalwork pertaining to heating, ventilating, and air conditioning is specified in Division 15.

Submittals:

1. Shop Drawings: Drawings of sheet metal items showing weights, gauges or thicknesses; types of materials; expansion-joint spacing; fabrication details; and installation procedures.

Products:

1. Materials:
   a. Lead or lead-coated metal shall not be used. Any metal listed by SMACNA Arch. Manual for a particular item may be used, unless otherwise specified or indicated. Materials shall conform to the requirements specified below and to the thicknesses and configurations established in SMACNA Arch. Manual. Different items need not be of the same metal, except that if copper is selected for any exposed item, all exposed items shall be copper.
   b. Accessories: Accessories and other items essential to complete the sheet metal installation, though not specifically indicated or specified, shall be provided.
   c. Sheet Materials: ASTM A 653 , Factory coated, galvanized steel, G90, gauge as indicated on the drawings, factory coated with fluoropolymer coating. Color to match Standing Seam Metal Roof specified in Section 07412 or as indicated on the drawings.
   d. Bituminous Cement: Type I asphalt cement conforming to ASTM D 2822 or ASTM D 4586. For coal tar roofing; coal tar cement conforming to ASTM D 4022.
   e. Sealant: Unless otherwise specified, sealant shall be an elastomeric weather resistant sealant as specified in Section 07900 JOINT SEALING.
   f. Fasteners: Fasteners shall be compatible with the fastened material and shall be the type best suited for the application.
   g. Felt: ASTM D 226, Type I.
   h. Polyvinyl Chloride (PVC) Reglets: ASTM D 1784, Class 14333D, 0.075 inch minimum thickness.
   i. Solder: ASTM B 32, 95-5 tin-antimony.
   j. Through-Wall Flashing
      1) Nonreinforced, waterproof, impermeable extruded elastomeric single ply sheeting not less than 30 mils thick.
      2) Other through-wall flashing material may be used provided the following performance criteria are met.
         a) No cracking or flaking when bent 180 degrees over a 1/32 inch mandrel and rebent at the same point over the same mandrel in an opposite direction at 32 degrees F.
         b) Water vapor permeability not more than 2 perms when tested in accordance with ASTM E 96.
         c) Minimum breaking strength of 90 pounds per inch width in the weakest direction when tested in accordance with ASTM D 828.
         d) No visible deterioration after being subjected to a 400-hour direct weathering test in accordance with ASTM D 822.
         e) No shrinkage in length or width and less than 5 percent loss of breaking strength after a 10-

day immersion, per ASTM D 543, in 5 percent (by weight) solutions, respectively, of sulfuric acid, hydrochloric acid, sodium hydroxide or saturated lime (calcium hydroxide).

Execution: 1. Gutters and downspouts shall be designed and fabricated in conformance with SMACNA Arch. Manual; louvers shall be fabricated in conformance with SMACNA Arch. Manual and as indicated. Unless otherwise specified or indicated, exposed edges shall be folded back to form a 1/2 inch hem on the concealed side, and bottom edges of exposed vertical surfaces shall be angled to form drips. Bituminous cement shall not be placed in contact with roofing membranes other than built-up roofing.

2. Expansion Joints: Expansion joints shall be provided as specified in SMACNA Arch. Manual. Expansion joints in continuous sheet metal shall be provided at 40 foot meter intervals for copper and stainless steel and at 32 foot intervals for aluminum, except extruded aluminum gravel stops and fascias which shall have expansion joints at not more than 12 foot spacing. Joints shall be evenly spaced. An additional joint shall be provided where the distance between the last expansion joint and the end of the continuous run is more than half the required interval spacing.

SECTION 07840 – FIRESTOPPING

Scope: 1. Firestopping using tested and listed firestop systems to form an effective barrier against the spread of fire, smoke and gases, and to maintain the integrity of fire resistance rated construction

References: 1. The publications referenced above (or below) establish minimum requirements for materials, systems and execution which may be specified in this Section.

AMERICAN SOCIETY FOR TESTING AND MATERIALS (ASTM)

ASTM E 84	Surface Burning Characteristics of Building Materials
ASTM E 119	Fire Tests of Building Construction and Materials
ASTM E 814	Fire Tests of Through-Penetration Fire Stops
ASTM E 1399	Cyclic Movement and Measuring the Minimum and Maximum Joint Widths of Architectural Joint Systems

UNDERWRITERS LABORATORIES (UL)

UL 723	Test for Surface Burning Characteristics of Building Materials
UL 1479	Fire Tests of Through-Penetration Firestops
UL 2079	Tests for Fire Resistance of Building Joint Systems
UL Fire Resistance Directory	Fire Resistance Directory (2 Vol.)

Submittals: 1. Shop Drawings: Detail drawings including manufacturer's descriptive data, typical details conforming to UL Fire Resist Directory or other details certified by another nationally recognized testing laboratory, installation instructions or UL listing details for a firestopping assembly in lieu of fire-test data or report. For those firestop applications for which no UL tested system is available through a manufacturer, a manufacturer's engineering judgement, derived from similar UL system designs or other tests, shall be submitted for review and approval prior to installation. Submittal shall indicate the firestopping material to be provided for each type of application. When more than 5 penetrations or construction joints are to receive firestopping, drawings shall indicate location and type of application.

2. Certificates:
   a. Certificates attesting that firestopping material complies with the specified requirements. In lieu of certificates, drawings showing UL classified materials as part of a tested assembly may be provided. Drawings showing evidence of testing by an alternate nationally recognized independent laboratory may be substituted.
   b. Installer Qualifications: Documentation of training and experience.

General Requirements: 1. Firestopping shall consist of furnishing and installing tested and listed firestop systems, combination of materials, or devices to form an effective barrier against the spread of flame, smoke and gases, and maintain the integrity of fire resistance rated walls, partitions, floors, and ceiling-floor assemblies, including through-penetrations and construction joints and gaps. Through-penetrations include the annular space around pipes, tubes, conduit, wires, cables and vents. Construction joints include those used to accommodate expansion, contraction, wind, or seismic movement; firestopping material shall not interfere with the required movement of the joint. Gaps requiring firestopping include gaps between the curtain wall and the floor slab and between the top of the fire-rated walls and the roof or floor deck above.

Products: 1. Firestopping Materials: Firestopping materials shall consist of commercially manufactured, asbestos-free products complying with the following minimum requirements:
   a. Fire Hazard Classification: Material shall have a flame spread of 25 or less, and a smoke developed rating of 50 or less, when tested in accordance with ASTM E 84 or UL 723. Material shall be an approved firestopping material as listed in UL Fire Resistance Directory or by a nationally recognized testing laboratory.
   b. Toxicity: Material shall be nontoxic to humans at all stages of application.
   b. Fire Resistance Rating: Firestopping will not be required to have a greater fire resistance rating than that of the assembly in which it is being placed.
   c. Through-Penetrations: Firestopping materials for through-penetrations, as described in paragraph GENERAL REQUIREMENTS, shall provide "F" and "T" fire resistance ratings in accordance with ASTM E 814 or UL 1479. Fire resistance ratings shall be as follows:
      1) Penetrations of Fire Resistance Rated Walls and Partitions: F Rating = Rating of wall or partition being penetrated.
      2) Penetrations of Fire Resistance Rated Floors, Roof-Ceiling Assemblies and Ceiling-Floor Assemblies: F Rating = one hour, T Rating = one hour.
   e. Construction Joints and Gaps: Fire resistance ratings of construction joints, as described in paragraph GENERAL REQUIREMENTS, and gaps such as those between floor slabs or roof decks and curtain walls shall be the same as the construction in which they occur. Construction joints and gaps shall be provided with firestopping materials and systems that have been tested per ASTM E 119 or UL 2079 to meet the required fire resistance rating. Systems installed at construction joints shall meet the cycling requirements of ASTM E 1399 or UL 2079.

SECTION 07900 - JOINT SEALERS

Scope: 1. Provide sealants at intersection of building components.

References: 1. The publications referenced above (or below) establish minimum requirements for materials, systems and execution which may be specified in this Section.

AMERICAN SOCIETY FOR TESTING AND MATERIALS (ASTM)

ASTM C 509	Elastomeric Cellular Preformed Gasket and Sealing Material
ASTM C 570	Oil- and Resin-Base Caulking Compound for Building Construction

ASTM C 734	Low-Temperature Flexibility of Latex Sealants After Artificial Weathering
ASTM C 834	Latex Sealants
ASTM C 920	Elastomeric Joint Sealants
ASTM C 1085	Butyl Rubber-Based Solvent-Release Sealants
ASTM D 217	Cone Penetration of Lubricating Grease (IP50/88)
ASTM D 1056	Flexible Cellular Materials - Sponge or Expanded Rubber
ASTM E 84	Surface Burning Characteristics of Building Materials

Submittals:

1. Product Data: Manufacturer's descriptive data including storage requirements, shelf life, curing time, instructions for mixing and application, and primer data (if required). A copy of the Material Safety Data Sheet shall be provided for each solvent, primer or sealant material.

2. Certificates: Certificates of compliance stating that the materials conform to the specified requirements.

Products:

1. Backing: Backing shall be 25 to 33 percent oversize for closed cell and 40 to 50 percent oversize for open cell material, unless otherwise indicated.
   a. Rubber: Cellular rubber sponge backing shall be ASTM D 1056, Type 2, closed cell, Class Around cross section.
   b. Synthetic Rubber: Synthetic rubber backing shall be ASTM C 509, Option I, Type I preformed rods.
   c. Neoprene: Neoprene backing shall be ASTM D 1056, closed cell expanded neoprene cord Type 2, Class C, Grade 2C2.

2. Bond-Breaker: Bond-breaker shall be as recommended by the sealant manufacturer to prevent adhesion of the sealant to backing or to bottom of the joint.

3. Primer: Primer shall be non-staining type as recommended by sealant manufacturer for the application.

4. Caulking: SLNT-1; Oil- and resin-based caulking shall be ASTM C 570, Type I.

5. Sealant:
   a. Latex: SLNT-2; Latex Sealant shall be ASTM C 834.
   b. Elastomeric: Elastomeric sealants shall conform to ASTM C 920 and the following:
      1) SLNT-3; Polyurethane sealant: Grade P, Class 25 , Use T.
      2) SLNT-4; Silicone sealant: Type M, Grade NS,, Class 25, Use NT, M, G, A, and O.

6. Acoustical: SLNT-5; Rubber or polymer-based acoustical sealant shall have a flame spread of 25 or less and a smoke developed rating of 50 or less when tested in accordance with ASTM E 84. Acoustical sealant shall have a consistency of 250 to 310 when tested in accordance with ASTM D 217, and shall remain flexible and adhesive after 500 hours of accelerated weathering as specified in ASTM C 734, and shall be non-staining.

7. Butyl: SLNT-6; Butyl sealant shall be ASTM C 1085.

8. Solvents And Cleaning Agents: Solvents, cleaning agents, and accessory materials shall be provided as recommended by the manufacturer.

Execution:

1. Sealant Locations

   SLNT-1 and 2: Caulking compounds conforming to ASTM C 570, Type I, should be used on interior applications for caulking joints in wood or masonry, or in narrow joints between masonry surfaces, wood surfaces, or metal surfaces where limited movement is anticipated. The listing below indicates the types of applications appropriate for use of oil-and-resin-base caulking.
   a. Openings 1/4 inch and less between walls and partitions and adjacent lockers, casework, door frames,

built-in or surface mounted equipment and fixtures, etc.

b. Perimeters of frames of doors, windows, and access panels which adjoin exposed interior concrete and masonry surfaces.
c. Joints between interior masonry walls and partitions columns, pilasters, and concrete walls.
d. Other interior locations where small voids between materials requiring filling for first-class workmanship and painting

SLNT-3: Sealants conforming to ASTM C 920, Grade P, Class 25, Use T, should be used on interior and exterior horizontal applications in decks, plazas, patios, driveways, terraces, and other areas where foot traffic and mechanical abuse are encountered. The listing below indicates the types of applications appropriate for use.

a. Exterior sidewalks adjacent to buildings.
b. Interior exposed joints in horizontal slabs where where subject to foot or vehicular traffic
c. Interior exposed perimeter joints in slabs abutting walls and other vertical surfaces.

SLNT-4 and 6: Sealants conforming to ASTM C 920, Grade NS, Class 25,Use T, should be used on exterior application for sealing construction, expansion, contraction and other movable joints in concrete, masonry, and metal where cyclic movement is anticipated and other miscellaneous exterior sealing. These sealants should not be used for sealing joints adjacent to asphaltic or bituminous materials; an asphaltic or bituminous material should be used. The listing below indicates the types of applications appropriate for use.

a. Joints and recesses formed where frames and subsills of windows, doors, louvers, and vents adjoin masonry, concrete or metal frames. Use sealing compound at both exterior and interior surfaces of exterior wall penetrations.
b. Masonry joints in which shelf angles occur. Joints between new and existing exterior masonry walls.
c. Expansion and control joints. Interior face of expansion joints in exterior concrete or masonry walls where no metal expansion joint covers are required.
d. Openings where items pass through exterior walls.
e. Metal reglets where flashing is inserted into masonry joints, or where flashing is penetrated by coping dowels.

SLNT-5: Use of acoustical sealants shall conform to ASTM C 919 and applied where an STC rating is required and where indicated on the drawings.

DIVISION 8 - DOORS AND WINDOWS

SECTION 08110 - STEEL DOORS AND FRAMES

Scope: 1. Provide hollow metal doors and door frames, sidelight and transom framing.

References: 1. The publications referenced above (or below) establish minimum requirements for materials, systems and execution which may be specified in this Section.

AMERICAN NATIONAL STANDARDS INSTITUTE (ANSI)

ANSI A250.6 Hardware on Standard Steel Doors (Reinforcement - Application)
ANSI A250.8 SDI-100 Recommended Specifications for Standard Steel Doors and Frames

AMERICAN SOCIETY FOR TESTING AND MATERIALS (ASTM)

ASTM A 591	Steel Sheet, Electrolytic Zinc-Coated, for Light Coating Mass Applications
ASTM A 653/A 653M	Steel Sheet, Zinc-Coated (Galvanized) or Zinc-Iron Alloy-Coated (Galvannealed) by the Hot-Dip Process
ASTM A 924/A 924M	General Requirements for Steel Sheet, Metallic-Coated by the Hot-Dip Process
ASTM C 591	Unfaced Preformed Rigid Cellular Polyisocyanurate Thermal Insulation
ASTM D 2863	Measuring the Minimum Oxygen Concentration to Support Candle-Like Combustion of Plastics (Oxygen Index)

DOOR AND HARDWARE INSTITUTE (DHI)

ANSI/DHI A115	Steel Door Preparation Standards (Consisting of A115.1 through A115.6 and A115.12 through A115.18)

NATIONAL FIRE PROTECTION ASSOCIATION (NFPA)

NFPA 80	Fire Doors and Fire Windows
NFPA 252	Standard Methods of Fire Tests of Door Assemblies

STEEL DOOR INSTITUTE (SDOI)

SDI 105	Recommended Erection Instructions for Steel Frames
SDI 111-B	Recommended Standard Details for Dutch Doors
SDI 111-F	Recommended Existing Wall Anchors for Standard Steel Doors and Frames
SDI 113	Apparent Thermal Performance of STEEL DOOR and FRAME ASSEMBLIES

UNDERWRITERS LABORATORIES (UL)

UL 10B	Fire Tests of Door Assemblies

Submittals:

1. Shop Drawings: Show elevations, construction details, metal gages, hardware provisions, method of glazing, and installation details.

2. Product Data: Submit manufacturer's descriptive literature for doors, frames, and accessories. Include data and details on door construction, panel (internal) reinforcement, insulation, and door edge construction. When "custom hollow metal doors" are provided in lieu of "standard steel doors," provide additional details and data sufficient for comparison to ANSI A250.8 requirements.

Products:

1. Doors: ANSI A250.8, except as specified otherwise. Prepare doors to receive hardware specified in Section 08710 DOOR HARDWARE. Doors shall be reinforced at all hardware locations. Undercut where indicated. Exterior doors shall have top edge closed flush and sealed to prevent water intrusion. Doors shall be 1 3/4 inch thick, unless otherwise indicated.
   a. Classification - Level, Performance, Model
      1) Heavy Duty Doors: ANSI A250.8, Level 2, physical performance Level B, Model 2, with core construction as required by the manufacturer for interior doors and for exterior doors, of size(s) and design(s) indicated. Where vertical stiffener cores are required, the space between the stiffeners shall be filled with mineral board insulation. Provide Level II for all interior doors.
      2) Extra Heavy Duty Doors: ANSI A250.8, Level 3, physical performance Level A, Model 2 with core construction as required by the manufacturer for all exterior doors, of size(s) and design(s) indicated. Where vertical stiffener cores are required, the space between the stiffeners shall be filled with mineral board insulation. Provide Level 3 for all exterior doors.
      3) Insulated Steel Door Systems: Insulated steel doors shall have a core as specified below and an R factor of 10.0 or more (based on a k value of 0.16); face sheets, edges, and frames of galvanized

steel not lighter than 23 gage, 16 gage, 16 gage respectively; magnetic weatherstripping; nonremovable-pin hinges; thermal-break aluminum threshold; and vinyl door bottom. Doors and frames shall receive phosphate treatment, rust-inhibitive primer, and baked acrylic enamel finish. Doors shall have been tested in accordance with ANSI A250.4 and shall have met the requirements for Level C. Prepare doors to receive hardware specified in Section 08710, "Door Hardware." Doors shall be 1 3/4 inches thick. Provide insulated steel doors and frames at all exterior doors. Insulated cores shall be of type specified, and provide an apparent U-factor of .48 in accordance with SDI 113 and shall conform to:

a). Rigid Polyurethane Foam: ASTM C 591, Type 1 or 2, foamed-in-place or in board form, with oxygen index of not less than 22 percent when tested in accordance with ASTM D 2863; or

b). Rigid Polystyrene Foam Board: ASTM C 578, Type I or II; or

c). Mineral board: ASTM C 612, Type I.

2. Frames: Welded construction with mitered corners; gage as follows:

a. ANSI A250.8, except as otherwise specified. Form frames to sizes and shapes indicated, with welded corners at masonry openings and knock-down field-assembled corners at openings in drywall. Provide steel frames for doors, sidelights, mullions, cased openings, and interior glazed panels, unless otherwise indicated.

1). Welded Frames: Continuously weld frame faces at corner joints. Mechanically interlock or continuously weld stops and rabbets. Grind welds smooth.

2). Knock-Down Frames: Design corners for simple field assembly by concealed tenons, splice plates, or interlocking joints that produce square, rigid corners and a tight fit and maintain the alignment of adjoining members. Provide locknuts for bolted connections.

3. Mullions and Transom Bars: Mullions and transom bars shall be closed or tubular construction and shall member with heads and jambs butt-welded thereto or knock-down for field assembly. Bottom of door mullions shall have adjustable floor anchors and spreader connections. Mullions shall be removable where indicated.

4. Stops and Beads: Form stops and beads from 0.9 mm thick 20 gage steel. Provide for glazed and other openings in standard steel frames. Secure beads to frames with oval-head, countersunk Phillips self-tapping sheet metal screws or concealed clips and fasteners. Space fasteners approximately 300 to 400 mm 12 to 16 inches on centers. Miter molded shapes at corners. Butt or miter square or rectangular beads at corners.

5. Fire Doors And Frames: NFPA 80 and this specification. The requirements of NFPA 80 shall take precedence over details indicated or specified. Fire doors and frames shall bear the label of Underwriters Laboratories, Inc. (UL), Factory Mutual Engineering and Research (FM), or Warnock Hersey International (WHI) attesting to the rating required. Testing shall be in accordance with NFPA 252 or UL 10B. Labels shall be metal with raised letters, and shall bear the name or file number of the door and frame manufacturer. Labels shall be permanently affixed at the factory to frames and to the hinge edge of the door. Door labels shall not be painted.

6. Astragals: For pairs of exterior steel doors which will not have aluminum astragals or removable mullions, as specified in Section 08710, "Door Hardware," provide overlapping steel astragals with the doors. For interior pairs of fire rated and smoke control doors, provide stainless steel astragals complying with NFPA 80 for fire rated assemblies and NFPA 105 for smoke control assemblies.

7. Moldings: Provide moldings around glass of interior and exterior doors and louvers of interior doors. Provide nonremovable moldings on outside of exterior doors and on corridor side of interior doors. Other moldings may be stationary or removable. Secure inside moldings to stationary moldings, or provide snap-on moldings. Muntins shall interlock at intersections and shall be fitted and welded to stationary moldings.

8. Shelves for Dutch Doors: SDI 111-B. Fabricate shelves of steel not lighter than 16 gage, 8 inches wide. Brackets shall be stock type fabricated of the same metal used to fabricate shelves.

9. Hardware Preparation: Provide minimum hardware reinforcing gages as specified in ANSI A250.6. Drill and tap doors and frames to receive finish hardware. Prepare doors and frames for hardware in accordance with the applicable requirements of ANSI A250.8 and ANSI A250.6. For additional requirements refer to ANSI/DHI A115. Drill and tap for surface-applied hardware at the project site. Build additional reinforcing for surface-applied hardware into the door at the factory. Locate hardware in accordance with the requirements of ANSI A250.8, as applicable. Punch door frames, with the exception of frames that will have weatherstripping or lightproof or soundproof gasketing, to receive a minimum of three rubber or vinyl door silencers on lock side of single doors and one silencer for each leaf at heads of double doors. Set lock strikes out to provide clearance for silencers.

10. Finishes:
    a. Factory-Primed Finish: All surfaces of doors and frames shall be thoroughly cleaned, chemically treated and factory primed with a rust inhibiting coating as specified in ANSI A250.8.
    b. Hot-Dip Zinc-Coated and Factory-Primed Finish: Fabricate exterior doors and frames from hot dipped zinc coated steel, alloyed type, that complies with ASTM A 924/A 924M and ASTM A 653/A 653M. The Coating weight shall meet or exceed the minimum requirements for coatings having 0.4 ounces per square foot total both sides, i.e., A40. Repair damaged zinc-coated surfaces by the application of zinc dust paint. Thoroughly clean and chemically treat to insure maximum paint adhesion. Factory prime as specified in ANSI A250.8. Provide for all exterior doors.
    c. Electrolytic Zinc-Coated Anchors and Accessories: Provide electrolytically deposited zinc-coated steel in accordance with ASTM A 591, Commercial Quality, Coating Class A. Phosphate treat and factory prime zinc-coated surfaces as specified in ANSI A250.8.
    d. Finish color shall be as selected by the Architect and approved by the Government.

11. Louvers: Sightproof, stationary type, 24 gage cold rolled steel in 20 gage frame.

Execution: 1. Set frames in accordance with SDI 105. Hang doors in accordance with clearances specified in ANSI A250.8. After erection and glazing, clean and adjust hardware. Install fire doors and frames, including hardware, in accordance with NFPA 80.

SECTION 08120 – ALUMINUM DOORS AND FRAMES

Scope: 1. Aluminum doors and frames intended for use principally as main entrance and vestibule doors, and for prominent interior doors from lobbies and similar spaces in buildings of public access.

References: The publications referenced above (or below) establish minimum requirements for materials, systems and execution which may be specified in this Section.

ALUMINUM ASSOCIATION (AA)

AA 45	Aluminum Finishes

AMERICAN SOCIETY FOR TESTING AND MATERIALS (ASTM)

ASTM A 36/A 36M	Carbon Structural Steel
ASTM B 209M	Aluminum and Aluminum-Alloy Sheet and Plate (Metric)
ASTM B 221M	Aluminum and Aluminum-Alloy Extruded Bars, Rods, Wire, Profiles, and Tubes

(Metric)

ASTM E 283 Rate of Air Leakage Through Exterior Windows, Curtain Walls, and Doors Under Specified Pressure Differences Across the Specimen

ASTM E 331 Water Penetration of Exterior Windows, Curtain Walls, and Doors by Uniform Static Air Pressure Difference

Performance Requirements: 1. Structural

a. Shapes and thickness of framing members shall be sufficient to withstand a design wind load as determined in accordance with IBC 2000 of supported area with a deflection of not more than 1/175 times the length of the member and a safety factor of not less than 1.65. Provide glazing beads, moldings, and trim of not less than 0.050 inch nominal thickness.

b. Air Infiltration: When tested in accordance with ASTM E 283, air infiltration shall not exceed 0.06 cubic feet per minute per square foot of fixed area at a test pressure 6.24 pounds per square foot (50 mile per hour wind).

c. Water Penetration: When tested in accordance with ASTM E 331, there shall be no water penetration at a pressure of 8 pounds per square foot of fixed area.

Submittals: 1. Shop Drawings: Show elevations of each door type, size of doors and frames, metal gages, details of door and frame construction, methods of anchorage, glazing details, weatherstripping, provisions for and location of hardware, and details of installation.

2. Manufacturer's Instructions: Submit detail specifications and instructions for installation, adjustments, cleaning, and maintenance.

Products: 1. Anchors: Stainless steel or steel with hot-dipped galvanized finish.

2. Weatherstripping: Continuous wool pile, silicone treated, or type recommended by door manufacturer.

3. Aluminum Alloy for Doors and Frames: ASTM B 221M/ASTM B 221, Alloy 6063-T5 for extrusions. ASTM B 209M/ASTM B 209, alloy and temper best suited for aluminum sheets and strips.

4. Fasteners: Hard aluminum or stainless steel.

5. Structural Steel: ASTM A 36/A 36M

6. Finish: Clean exposed aluminum surfaces and provide an anodized finish conforming to AA 45. Provide exposed aluminum surfaces with factory finish of anodic coating or organic coating. Finish color shall be as selected by the Architect and approved by the Government.

Fabrication: 1. Frames: Extruded aluminum shapes with contours approximately as indicated. Provide removable glass stops and glazing beads for frames accommodating fixed glass. Use countersunk stainless steel Phillips screws for exposed fastenings, and space not more than 12 inches o.c. Mill joints in frame members to a hairline fit, reinforce, and secure mechanically. Provide removable mullions were indicated.

2. Aluminum Doors: Of type, size, and design indicated and not less than 1 3/4 inches thick. Minimum wall thickness, 0.125 inch, except beads and trim, 0.050 inch. Door sizes shown are nominal and shall include standard clearances as follows: 0.093 inch at hinge and lock stiles, 0.125 inch between meeting stiles, 0.125 inch at top rails, 0.187 inch between bottom and threshold, and 0.687 inch between bottom and floor. Bevel single-acting doors 0.063 or 0.125 inch at lock, hinge, and meeting stile edges.

3. Full Glazed Stile and Rail Doors: Doors shall have medium stiles and rails as indicated. Fabricate from

extruded aluminum hollow seamless tubes or from a combination of open-shaped members interlocked or welded together. Fasten top and bottom rail together by means of welding or by 3/8 or 1/2 inch diameter cadmium-plated tensioned steel tie rods. Provide an adjustable mechanism of jack screws or other methods in the top rail to allow for minor clearance adjustments after installation.

4. Weatherstripping: Provide on stiles and rails of exterior doors. Fit into slots which are integral with doors or frames. Weatherstripping shall be replaceable without special tools, and adjustable at meeting rails of pairs of doors. Installation shall allow doors to swing freely and close positively. Air leakage of a single leaf weatherstripped door shall not exceed 0.5 cubic feet per minute of air per square foot of door area when tested in accordance with ASTM E 283

5. Hardware is specified in Section 08710, "Door Hardware." Deliver hardware templates and hardware (except field-applied hardware) to the door manufacturer for use in fabrication of aluminum doors and frames. Cut, reinforce, drill, and tap doors and frames at the factory to receive template hardware. Provide doors to receive surface-applied hardware, except push plates, kick plates, and mop plates, with reinforcing only; drill and tap in the field. Provide hardware reinforcements of stainless steel or steel with hot-dipped galvanized finish, and secure with stainless steel screws. Provide reinforcement in core of flush doors as required to receive locks, door closers, and other hardware.

6. Provisions for Glazing: Provide extruded aluminum snap-in glazing beads on interior side of doors. Provide extruded aluminum, theft-proof, snap-in glazing beads or fixed glazing beads on exterior or security side of doors. Glazing beads shall have vinyl insert glazing gaskets. Design glazing beads to receive glass of thickness indicated or specified. Glazing is specified in Section 08800, "Glass."

7. Finishes: Provide exposed aluminum surfaces with mill finish, factory finish of anodic coating or organic coating as selected by the Architect and approved by the Government.
   a. Anodic Coating: Clean exposed aluminum surfaces and provide an anodized finish conforming to AA 45. Finish shall be integral color-anodized, designation AA-M10-C22-A42, Architectural Class I 0.7 mil or thicker.

SECTION 08210 - WOOD DOORS

Scope: 1. Provide wood doors and wood panels for transoms.

References: 1. The publications referenced above (or below) establish minimum requirements for materials, systems and execution which may be specified in this Section.

AMERICAN SOCIETY FOR TESTING AND MATERIALS (ASTM)

ASTM E 152	Fire Tests of Door Assemblies

ARCHITECTURAL WOODWORK INSTITUTE (AWI)

AWI QS	Architectural Woodwork Quality Standards and Quality Certification Program

NATIONAL FIRE PROTECTION ASSOCIATION (NFPA)

NFPA 80	Fire Doors and Fire Windows
NFPA 252	Fire Tests of Door Assemblies

WINDOW AND DOOR MANUFACTURERS ASSOCIATION (WDMA)

NWWDA I.S.1-A Architectural Wood Flush Doors
NWWDA TM-5 Split Resistance Test
NWWDA TM-7 Cycle - Slam Test
NWWDA TM-8 Hinge Loading Resistance Test

UNDERWRITERS LABORATORIES (UL)

UL 10B Fire Tests of Door Assemblies

Submittals:

1. Shop Drawings: Submit drawings or catalog data showing each type of door unit . Drawings and data shall indicate door type and construction, sizes, thickness, door louvers, and glazing.

2. Product Data: Doors, accessories, sample warranty, and Fire resistance rating.

3. Samples: Prior to the delivery of wood doors, submit a sample section of each type of door which shows the stile, rail, veneer, finish, and core construction and door finish.

4. Test Reports: Submit split resistance test report for doors tested in accordance with NWWDA TM-5, cycle-slam test report for doors tested in accordance with NWWDA TM-7, and hinge loading resistance test report for doors tested in accordance with NWWDA TM-8.

Warranty:

1. Warranty shall warrant doors free of defects as set forth in the door manufacturer's standard door warranty.

Products:

1. Wood doors for transparent finish: Solid core flush wood door with staved lumber or particleboard core Type II, for interior use; conforming to WWDA I.S.1-A with faces of premium grade white oak. Hardwood veneers shall be plain sliced book matched.

2. Fire Rated Wood Doors: Doors specified or indicated to have a fire resistance rating shall conform to the requirements of UL 10B, ASTM E 152, or NFPA 252 for the class of door indicated. Affix a permanent metal label with raised or incised markings indicating testing agency's name and approved hourly fire rating to hinge edge of each door.

   a. Stiles of "B" and "C" label fire doors utilizing standard mortise leaf hinges shall meet the following performance criteria:
      1) Split resistance: Average of ten test samples shall be not less than 500 pounds load when tested in accordance with NWWDA TM-5.
      2) Cycle-slam: 200,000 cycles with no loose hinge screws or other visible signs of failure when tested in accordance with the requirements of NWWDA TM-7.
      3) Hinge loading resistance: Average of ten test samples shall be not less than 700 pounds load when tested for direct screw withdrawal in accordance with NWWDA TM-8 using a No. 12, 1 1/4 inch long, steel, fully threaded wood screw. Drill 4 mm pilot hole, use 1 1/2 inch opening around screw for bearing surface, and engage screw full, except for last 1/8 inch. Do not use a steel plate to reinforce screw area.

3. Finish: Provide doors finished at the factory by the door manufacturer as follows: AWI QS Section 1500, specification for System No. TR-6, Transparent, catalyzed polyurethane, premium quality, satin sheen. Use stain when required to produce the finish specified for color. Seal edges, cutouts, trim, and wood accessories, and apply two coats of finish compatible with the door face finish. Touch-up finishes that are scratched or marred, or where exposed fastener holes are filled, in accordance with the door manufacturer's

instructions. Match color and sheen of factory finish using materials compatible for field application.

SECTION 08310 - ACCESS DOORS AND FRAMES

Scope: 1. Provide access doors for access to valves, controls, and concealed items requiring maintenance.

Submittals 1. Product Data

Products: 1. Non-Fire Rated Access Panels
- a. Flush Style, Gypsum Board Access Panels: 16 ga steel or 0.6 inch extruded aluminum frame with drywall flange and 14 ga steel door panels; concealed continuous steel piano hinge which allows 175 deg. opening; screw driver slot, quarter turn cam lock. Provide manufacturer's standard factory applied baked enamel primer.
  - 1) Cesco Products, Inc., SR-III.
  - 2) J.L. Industries, Model WB.
  - 3) Karp Associates, Inc., Model KDW.
  - 4) Milcor, Inc., Style DW.
  - 5) Nystrom, Inc., WB Series
- b. Flush Style, Masonry Access Panels: 16 ga steel or 0.6 inch extruded aluminum frame with drywall flange and 14 ga steel door panels; concealed continuous steel piano hinge which allows 175 deg. opening; screw driver slot, quarter turn cam lock. Provide manufacturer's standard factory applied baked enamel primer.
  - 1) Cesco Products, Inc., Model W.
  - 2) J.L. Industries, Model TM.
  - 3) Karp Associates, Inc., Model DSC-214M.
  - 4) Milcor, Inc., Style M.
  - 5) Nystrom, Inc., TM Series.

2. Fire Rated Access Panels
- a. Flush Style, Fire Rated Gypsum Board Wall Access Panels: 16 ga steel door frames and 20 steel door panels; concealed continuous steel piano hinge which allows 175 deg. opening; self closing; recessed turn ring. Provide manufacturer's standard factory applied baked enamel primer.
  - 1) Cesco Products, Inc., FB.
  - 2) J.L. Industries, Model FD.
  - 3) Karp Associates, Inc., Model KRP-150FR.
  - 4) Milcor, Inc., Fire Rated Access Doors.
  - 5) Nystrom, Inc., FR Series.

SECTION 08330 - OVERHEAD ROLLING DOORS

Scope: 1. Overhead Rolling doors for commercial use.

References: 1. The publications referenced above (or below) establish minimum requirements for materials, systems and execution which may be specified in this Section.

AMERICAN SOCIETY FOR TESTING AND MATERIALS (ASTM)

ASTM A 653/A 653M	Steel Sheet, Zinc-Coated (Galvanized) or Zinc-Iron Alloy-Coated (Galvannealed) by the Hot-Dip process
ASTM E 84	Surface Burning Characteristics of Building Materials

ASTM E 330 Structural Performance of Exterior Windows, Curtain Walls, and Doors by Uniform Static Air Pressure Difference

AMERICAN SOCIETY OF HEATING, REFRIGERATING AND AIR-CONDITIONING ENGINEERS (ASHRAE)

ASHRAE Handbook-IP Handbook, Fundamentals I-P Edition
ASHRAE Handoobk-SI Handbook, Fundamentals SI Edition

NATIONAL ELECTRICAL MANUFACTURERS ASSOCIATION (NEMA)

NEMA ICS 2 Industrial Control and Systems Controllers, Contactors, and Overload Relays Rated Not More Than 2,000 Volts AC or 750 Volts DC
NEMA ICS 6 Industrial Control and Systems Enclosures
NEMA MG 1 Motors and Generators

NATIONAL FIRE PROTECTION ASSOCIATION (NFPA)

NFPA 70 National Electrical Code
NFPA 80 Fire Doors and Fire Windows

Submittals:

1. Shop Drawings: Drawings showing the location of each door including schedules. Drawings shall include elevations of each door type, details and method of anchorage, details of construction, location and installation of hardware, shape and thickness of materials, details of joints and connections, and details of guides, power operators, controls, and other fittings.

2. Product Data: Manufacturer's catalog data, test data, and summary of forces and loads on the walls/jambs. Manufacturer's preprinted installation instructions.

3. Samples: Manufacturer's standard color samples of factory applied finishes.

4. Operation and Maintenance Data: Operation Manual, Maintenance and Repair Manual; copies of the system operation manual and system maintenance and repair manual for each type of door and control system.

Warranty:

1. Manufacturer's standard performance guarantees or warranties that extend beyond a 1-year period shall be provided.

Operation And Maintenance Manuals:

1. Operating instructions outlining the step-by-step procedures required for motorized door and shutter operation for the overhead rolling door unit shall be provided. The instructions shall include the manufacturer's name, model number, service manual, parts list, and brief description of all equipment and their basic operating features. Maintenance instructions listing routine maintenance procedures, possible breakdowns and repairs, troubleshooting guides, and simplified diagrams for the equipment as installed shall be provided. A complete list of parts and supplies, source of supply, and a list of the high mortality maintenance parts shall be provided.

Products:

1. Overhead rolling doors shall be spring counterbalanced, rolling type, with interlocking slats, complete with guides, fastenings, hood, brackets, and operating mechanisms, and shall be designed for use on openings as indicated. Doors shall be surface-mounted type with guides at jambs set back a sufficient distance to

clear the opening. Exterior doors shall be mounted on interior side of walls. Fire doors shall bear the Underwriters Laboratories, Warnock Hersey, Factory Mutual or other nationally recognized testing laboratory label for the rating as required by code. Each door shall be provided with a permanent label showing the manufacturer's name and address and the model/serial number of the door. Doors in excess of the labeled size shall be deemed oversize and shall be provided with a listing agency oversize label, or a listing agency oversize certificate, or a certificate signed by an official of the manufacturing company certifying that the door and operator have been designed to meet the specified requirements.

a. Wind Load Requirements: Doors and components shall be designed to withstand the minimum design wind load as determined in accordance with IBC 2000. Doors shall be constructed to sustain a superimposed load, both inward and outward, equal to 1-1/2 times the minimum design wind load. Calculations shall be provided that prove the door design meets the design windload requirements. As an option, test data showing compliance with design windload requirements for the specific door design tested in accordance with the uniform static air pressure difference test procedures of ASTM E 330 shall be provided. Recovery shall be at least 3/4 of the maximum deflection within 24 hours after the test load is removed. Sound engineering principles may be used to interpolate or extrapolate test results to door sizes not specifically tested.

b. Operational Cycle Life: All portions of the door and door operating mechanism that are subject to movement, wear, or stress fatigue shall be designed to operate through a minimum number of 20,000 cycles. One complete cycle of door operation is defined as when the door is in the closed position, moves to the full open position, and returns to the closed position.

2. Curtains: The curtains shall roll up on a barrel supported at the head of opening on brackets, and shall be balanced by helical torsion springs. Steel slats for doors less than 15 feet wide shall be minimum bare metal thickness of 0.0281 inches. Steel slats for doors from 15 – 21 feet wide shall be minimum bare metal thickness of 0.0344 inches. Steel slats for doors 21 feet wide and wider shall be minimum bare metal thickness of 0.0438 inches. . Slats shall be of the minimum bare metal decimal thickness required for the width indicated and the wind pressure specified above.

3. Non-Insulated Curtains: Curtains shall be formed of interlocking slats of shapes standard with the manufacturer. Slats for exterior doors shall be flat type.

4. Insulated Curtains: The slat system shall supply a minimum R-value of 4 when calculated in accordance with ASHRAE Handbook-IP ASHRAE Handbook-SI. Slats shall be of the flat type as standard with the manufacturer. Slats shall consist of a urethane or polystyrene core not less than 11/16 inch thick, completely enclosed within metal facings. Exterior face of slats shall be gauge as specified for curtains. Interior face shall be not lighter than 0.0219 inches. The insulated slat assembly shall have a flame spread rating of not more than 25 and a smoke development factor of not more than 50 when tested in accordance with ASTM E 84.

Operation: 1. Electric Power Operator With Auxiliary Chain Hoist Operation: Electric power operators shall be heavy-duty industrial type. The unit shall operate the door through the operational cycle life specified. The electric power operator shall be complete with electric motor, auxiliary operation, necessary means of reduction for medium-duty doors, or self-locking worm gear in oil bath for heavy-duty doors, brake, mounting brackets, push button controls, limit switches, magnetic reversing starter, and all other accessories necessary to operate components specified in other paragraphs of this section. The operator shall be so designed that the motor may be removed without disturbing the limit-switches settings and without affecting the emergency chain operator. Doors shall be provided with an auxiliary operator for immediate emergency manual operation of the door in case of electrical failure. Auxiliary operation shall be by means of galvanized endless chain extending to within 3 feet of the floor. The emergency manual operating mechanism shall be so arranged that it may be operated from the floor without affecting the settings of the limit switches. A mechanical device shall be included that will disconnect the motor from the drive operating mechanism when the auxiliary operator is used. Where control voltages differ from motor voltage, a control

voltage transformer shall be provided in and as part of the electric power operator system. Control voltage shall not exceed 120 volts.

2. Motors: Drive motors shall conform to NEMA MG 1, shall be high-starting torque, reversible type, and shall be of sufficient wattage and torque output to move the door in either direction from any position at a speed range of 6 to 8 inches per second without exceeding the rated capacity. Motors shall be suitable for operation on 208-230 volts, 60 hertz, 3- phase current and shall be suitable for across-the-line starting. Motors shall be designed to operate at full capacity over a supply voltage variation of plus or minus 10 percent of the motor voltage rating. Motors shall be provided with overload protection.

3. Controls: Control equipment shall conform to NEMA ICS 2. Enclosures shall conform to NEMA ICS 6, Type 12 (industrial use), Type 7 or 9 in hazardous locations, in accordance with NFPA 70. Exterior control stations shall be weatherproof key-operated type with corrosion-resistant cast-metal cover. Each control station shall be of the three position button type, marked "OPEN," "CLOSE," and "STOP." The "OPEN" and "STOP" controls shall be of the momentary contact type with seal-in contact. The "CLOSE" control shall be of the momentary contact type. When the door is in motion and the "STOP" control is pressed, the door shall stop instantly and remain in the stop position; from the stop position, the door shall be operable in either direction by the "OPEN" or "CLOSE" controls. Controls shall be of the full-guarded type to prevent accidental operation. Readily adjustable limit switches shall be provided to automatically stop the doors at their fully open and closed positions.

4. Sensing Edge Device: The bottom edge of electric power operated doors shall have an electric sensing edge for non-hazardous areas that will reverse the door movement upon contact with an obstruction and cause the door to return to its full open position. The sensing edge shall not substitute for a limit switch. Exterior doors shall be provided with a combination compressible weather seal and sensing edge.

5. Electrical Work: Conduit and wiring necessary for proper operation shall be provided under Division 16 ELECTRICAL. Flexible connections between doors and fixed supports shall be made with flexible type SJO cable, except in hazardous locations where wiring shall conform to NFPA 70, as appropriate. The cable shall have a spring-loaded automatic take up reel or a coil cord equivalent device.

6. Inertia Brake: Overhead rolling door shall have a mechanical inertia brake device which will stop the door from free fall in any position, should there be a failure in the motor operator brake or roller chain drive. The unit shall be capable of being reset with a back drive action.

7. Locking: Locking for motor operated doors shall consist of self-locking gearing and optional master keyed cylinder with electrical interlock.

SECTION 08331 – METAL COILING COUNTER DOORS

Scope: 1. Provide coiling counter doors at service counters.

References: 1. The publications referenced above (or below) establish minimum requirements for materials, systems and execution which may be specified in this Section.

AMERICAN SOCIETY FOR TESTING AND MATERIALS (ASTM)

ASTM A 240/A 240M Heat-Resisting Chromium and Chromium-Nickel Stainless Steel Plate, Sheet, and Strip for Pressure Vessels

NATIONAL FIRE PROTECTION ASSOCIATION (NFPA)

NFPA 80 Fire Doors and Fire Windows

Submittals:

1. Shop Drawings: Drawings showing elevations of each door type, details of anchorage, details of construction, location and description of hardware, shape and thickness of materials, details of joints and connections, and details of guides and fittings. A schedule showing the location of each counter door shall be included with the drawings.

2. Product Data: anufacturer's descriptive data and catalog cuts, Manufacturer's preprinted installation and cleaning instructions.

3. Operation and Maintenance Data: Six complete copies of maintenance instructions listing routine maintenance procedures, possible breakdowns and repairs, troubleshooting guides, and simplified diagrams for the equipment as installed. Spare parts data for each different item of material and equipment specified shall be supplied not later than 30 days prior to the date of beneficial occupancy. The data shall include a complete list of parts and supplies, with current unit prices and source of supply, and a list of the parts recommended by the manufacturer to be replaced after 1 year and 3 years of service.

Warranty:

1. Manufacturer's standard performance guarantees or warranties that extend beyond a 1 year period shall be provided.

Products:

1. Units: Counterbalanced units for crank hoist operation with hood to match grille curtain material.

2. Curtain: The curtain shall be fabricated Alloy 6063, 22 gauge Type 304 stainless steel slats conforming to ASTM A 240/A 240M, Type 304 or Type 430. Thickness of slat material shall be as required by width of opening or as required by specified fire-rating. Slats shall be approximately 1-1/4 to 1-1/2 inch wide with a depth of crown of 1/2 inch. Alternate slats shall be fitted with end locks to maintain curtain alignment. Bottom of curtain shall be provided with angle or tubular bar reinforcement matching the curtain, and fitted with a resilient bottom seal.

3. Jamb Guides: Guides shall be of 13 gauge minimum thickness stainless steel conforming to ASTM A 240/A 240M, Type 304 or Type 430.

4. Counterbalance Shaft Assembly: The curtain shall be coiled around a steel tube of sufficient thickness and diameter to prevent deflection exceeding 0.03 inch per foot. The barrel shall contain oil tempered helical steel torsion springs capable of sufficient torque to counterbalance the weight of the curtain. Springs shall be calculated to provide a minimum of 7,500 operating cycles (one complete cycle of door operation will begin with the door in the closed position, move to the full open position and return to the closed position).

5. Brackets: Brackets shall be a minimum 12 gauge thickness steel if flat plate, or 16 gauge thickness if there are a minimum of 3 returns of 3/4 inch width.

6. Hood: 24 gauge stainless steel conforming to ASTM A 240/A 240M, Type 304 or Type 430.

7. Locks: The curtain shall be locked at each side of the bottom bar by an integral slide bolt suitable for padlocks by others.

8. Fire-Rated Rolling Counter Doors: shall be rated as shown and shall conform to the requirements specified and to NFPA 80 for the class indicated. Doors shall bear the labels of a recognized testing agency indicating the applicable fire resistance rating. The construction details necessary for labeled rolling counter doors shall take precedence over details indicated or specified herein. Door curtains, guides and hood shall be stainless steel. Fire-rated rolling counter doors shall be complete with hardware, accessories,

and automatic closing device. Rolling counter doors in exit corridor walls shall be provided with perimeter smoke and draft control gasketing.

Operation: 1. Manual Operation, The curtain shall be operated by means of manual push-up with lift handles or continuous full width lift bar.

Automatic Closing Device: 1. Fire-rated counter doors shall be equipped with an automatic closing device which shall operate upon the fusing of a 165 degree F fusible link and by activation of the building's fire alarm system and smoke alarm system . Fire and smoke doors shall be easily reset by the facility user after they have been released by the detection system. Resetting the door shall not require the use of special tools.

Finish: 1. Exposed parts of the counter door, including the curtain, bottom rail, guides, and hood shall be of uniform finish and appearance. Stainless steel shall have a No. 4 finish. All other, non-exposed, steel parts shall be given a shop coat of primer paint standard with the manufacturer.

SECTION 08520 - ALUMINUM WINDOWS

Scope: 1. Provide commercial grade, awning type and fixed,, high-performance, aluminum windows, accessories, and screens.

References: 1. The publications referenced above (or below) establish minimum requirements for materials, systems and execution which may be specified in this Section.

ALUMINUM ASSOCIATION (AA)

AA DAF-45 Designation System for Aluminum Finishes

AMERICAN ARCHITECTURAL MANUFACTURERS ASSOCIATION (AAMA)

AAMA 101 Voluntary Specifications for Aluminum, Vinyl (PVC) and Wood Windows and Glass Doors

AMERICAN SOCIETY FOR TESTING AND MATERIALS (ASTM)

ASTM E 283 Determining the Rate of Air Leakage Through Exterior Windows, Curtain Walls, and Doors Under Specified Pressure Differences Across the Specimen
ASTM E 330 Structural Performance of Exterior Windows, Curtain Walls, and Doors by Uniform Static Air Pressure Difference
ASTM E 331 Water Penetration of Exterior Windows, Curtain Walls, and Doors by Uniform Static Air Pressure Difference

INSECT SCREENING WEAVERS ASSOCIATION (ISWA)

ISWA IWS 089 Recommended Standards and Specifications for Insect Wire Screening (Wire Fabric)

NATIONAL FENESTRATION RATING COUNCIL (NFRC)

NFRC 100 Procedure for Determining Fenestration Product U-factors

NFRC 200 Procedure for Determining Fenestration Product Solar Heat Gain Coefficients at Normal Incidence

NATIONAL FIRE PROTECTION ASSOCIATION (NFPA)

NFPA 101 Life Safety Code

SCREEN MANUFACTURERS ASSOCIATION (SMA)

SMA ANSI/SMA 1004 Aluminum Tubular Frame Screens for Windows

Performance: 1. Aluminum windows shall meet the following performance requirements. Testing requirements shall be performed by an independent testing laboratory or agency.

a. Structural Performance: Structural test pressures on window units shall be for positive load (inward) and negative load (outward) in accordance with ASTM E 330. After testing, there shall be no glass breakage, permanent damage to fasteners, hardware parts, support arms or actuating mechanisms or any other damage which could cause window to be inoperable. There shall be no permanent deformation of any main frame, sash or ventilator member in excess of the requirements established by AAMA 101 for the window types and classification specified in this section.

b. Air Infiltration: Air infiltration shall not exceed the amount established by AAMA 101 for each window type when tested in accordance with ASTM E 283.

c. Water Penetration: Water penetration shall not exceed the amount established by AAMA 101 for each window type when tested in accordance with ASTM E 331.

d. Thermal Performance: Thermal transmittance for thermally broken aluminum windows with insulating glass shall not exceed a U-factor of 0.75 Btu/hr-ft2-F determined according to NFRC 100, and a solar heat gain coefficient (SHGC) of 0.40 Btu/hr-ft2-F determined according to NFRC 200. Window units shall comply with the U.S. Department of Energy, Energy Star Window Program for the Southern Climate Zone.

e. Condensation Index Rating: The condensation index rating shall be 85 as determined using NFRC approved software THERM.

f. Life Safety Criteria: Windows shall conform to NFPA 101 Life Safety Code when rescue and/or second means of escape are indicated.

Submittals: 1. Shop Drawings: Drawings indicating elevations of window, rough-opening dimensions for each type and size of window, full-size sections, thicknesses of metal, fastenings, methods of installation and anchorage, connections with other work, type of wall construction, size and spacing of anchors, method of glazing, types and locations of operating hardware, mullion details, weatherstripping details, screen details including method of attachment, and window schedules showing locations of each window type.

2. Product Data: Manufacturer's descriptive data and catalog cut sheets, Manufacturer's preprinted installation instructions and cleaning instructions.

3. Samples: Manufacturer's standard color samples of the specified finishes.

4. Test Reports: Reports for each type of aluminum window attesting that identical windows have been tested and meet all performance requirements established under paragraph WINDOW PERFORMANCE.

5. Certificates: Certificates stating that the aluminum windows are AAMA certified conforming to requirements of this section. Labels or markings permanently affixed to the window will be accepted in lieu of certificates. Product ratings determined using NFRC 100 and NFRC 200 shall be authorized for certification and properly labeled by the manufacturer.

Qualification: 1. Window manufacturer shall specialize in designing and manufacturing the type of aluminum windows specified in this section, and shall have a minimum of 5 years of documented successful experience. Manufacturer shall have the facilities capable of meeting contract requirements, single-source responsibility and warranty.

Warranty: 1. Manufacturer's standard performance guarantees or warranties that extend beyond a 1 year period shall be provided.

Products: 1. Aluminum Window Types

a. Aluminum windows shall consist of complete units including sash, glass, frame, weatherstripping, screen, and hardware. Windows shall conform to AAMA 101. Windows shall be thermal break type double-glazed. Thermal barrier shall be neoprene, rigid vinyl, or polyurethane and shall be resistant to weather. Window members shall be heli-arc welded or angle-reinforced and mechanically joined and sealed. Exposed welded joints shall be dressed and finished. Joints shall be permanent and weathertight. Frames shall be constructed to provide a minimum 1/4 inch thermal break between the exterior and interior frame surfaces. Sash corners shall be internally sealed to prevent air and water leaks. Inner sash shall be key-controlled to swing to the interior to allow maintenance and replacement of the glass. Not less than 5 control keys shall be furnished. Operable windows shall permit cleaning the outside glass from inside the building.

b. Awning/Hopper/Projected Windows: Aluminum awning (A),hopper and projected windows shall conform to AAMA 101 Designation AP-HC60 type consisting of hinged ventilators arranged in a single or vertical series within a common frame. Ventilators shall be operated by a device which shall securely close the ventilator at both jambs without the use of additional manually-controlled locking device equipped with concealed four-bar friction hinges. Operating hardware, except ventilator arms and rotary operators, shall be concealed within frame and sill. Ventilator arms shall be concealed when windows are closed. Frames shall be not less than 2 1/2 inches frame depth and 2 1/2 inches deep sash, of minimum 1/8 inch thick section.

c. Fixed Windows: Aluminum fixed (F) windows shall conform to AAMA 101 F-HC60 type, non-operable glazed frame, complete with provisions for reglazing in the field. Frames shall be as specified for operable windows.

2. Weatherstripping: Weatherstripping for ventilating sections shall be of type designed to meet water penetration and air infiltration requirements specified in this section in accordance with AAMA 101, and shall be manufactured of material compatible with aluminum and resistant to weather. Weatherstrips shall be factory-applied and easily replaced in the field. Neoprene or polyvinylchloride weatherstripping are not acceptable where exposed to direct sunlight.

3. Insect Screens: Insect screens shall be aluminum window manufacturer's standard design, and shall be provided where scheduled on drawings. Insect screens shall be fabricated of roll-formed tubular-shaped aluminum frames conforming to SMA ANSI/SMA 1004 and (18 x 16) aluminum mesh screening conforming with ISWA IWS 089, Type III.

4. Accessories:

a. Fasteners: Fastening devices shall be window manufacturer's standard design made from aluminum, stainless steel, cadmium-plated steel, nickel/chrome-plated steel in compliance with AAMA 101. Self-tapping sheet metal screws will not be acceptable for material thicker than 1/16 inch

b. Hardware: Hardware shall be as specified for each window type and shall be fabricated of aluminum, stainless steel, cadmium-plated steel, zinc-plated steel or nickel/chrome-plated steel in accordance with requirements established by AAMA 101.

c. Window Anchors: Anchoring devices for installing windows shall be made of aluminum, cadmium-

plated steel, stainless steel, or zinc-plated steel conforming to AAMA 101.

5. Glass And Glazing: Aluminum windows shall be designed for inside glazing, field glazing, and for glass types scheduled on drawings and specified in Section 08810 GLASS. Units shall be complete with glass and glazing provisions to meet AAMA 101. Glazing material shall be compatible with aluminum, and shall not require painting.

6. Finish:
   a. Anodized Aluminum Finish: Exposed surfaces of aluminum windows shall be finished with anodic coating conforming to AA DAF-45: Architectural Class I, AA-M10-C22-A41, clear anodic coating, 0.7 mil thick, 215-R1 Natural Color. Finish shall be free of scratches and other blemishes. Color/Finish shall be as selected by the Architect and approved by the Government.
   b. Baked-Acrylic Resin-Based Coating: Exposed surfaces of aluminum windows shall be finished with acrylic resin-based coating conforming to AAMA 603, total dry thickness of 1.0 mils. Finish shall be free of scratches and other blemishes. Color/Finish shall be as selected by the Architect and approved by the Government.
   d. High-Performance Coating: Exposed surfaces of aluminum windows shall be finished with a two-coat fluoropolymer coating system containing at least 70 percent by weight polyvinylidene fluoride, PVF2 resin, factory-applied, oven-baked, conforming to AAMA 605, with a primer coat of 0.20 to 0.30 mils and a color coat of minimum 1.0 mil, total dry film thickness of 1.20 to 1.3 mils. Finish shall be free of scratches and other blemishes. Color/Finish shall be as selected by the Architect and approved by the Government.

SECTION 08710 – DOOR HARDWARE

Scope: 1. Provide finish hardware for permanent structures.

References: 1. The publications referenced above (or below) establish minimum requirements for materials, systems and execution which may be specified in this Section.

AMERICAN SOCIETY FOR TESTING AND MATERIALS (ASTM)

ASTM E 283	Rate of Air Leakage Through Exterior Windows, Curtain Walls, and Doors Under Specified Pressure Differences Across the Specimen
ASTM F 883	Padlocks

BUILDERS HARDWARE MANUFACTURERS ASSOCIATION (BHMA)

ANSI/BHMA A156.1	Butts and Hinges (BHMA 101)
ANSI/BHMA A156.3	Exit Devices (BHMA 701)
ANSI/BHMA A156.4	Door Controls - Closers (BHMA 301)
ANSI/BHMA A156.5	Auxiliary Locks & Associated Products (BHMA 501)
ANSI/BHMA A156.6	Architectural Door Trim (BHMA 1001)
ANSI/BHMA A156.7	Template Hinge Dimensions
ANSI/BHMA A156.8	Door Controls - Overhead Holders (BHMA 311)
ANSI/BHMA A156.13	Mortise Locks & Latches (BHMA 621)
ANSI/BHMA A156.15	Closer Holder Release Devices
ANSI/BHMA A156.16	Auxiliary Hardware
ANSI/BHMA A156.18	Materials and Finishes (BHMA 1301)
ANSI/BHMA A156.21	Thresholds

NATIONAL FIRE PROTECTION ASSOCIATION (NFPA)

NFPA 80	Fire Doors and Fire Windows
NFPA 101	Life Safety Code

STEEL DOOR INSTITUTE (SDOI)

ANSI/SDI 100	Standard Steel Doors and Frames

UNDERWRITERS LABORATORIES (UL)

UL BMD	Building Materials Directory

Submittals:

1. Shop Drawings: Hardware schedule and Keying system.
2. Product Data: All Hardware items
3. Manufacturer's Installation Instructions
4. Operation and Maintenance Data
5. Closeout Submittals: Key bitting Chart.

Key Bitting Requirements: 1 KEY BITTING CHART REQUIREMENTS: Submit key bitting charts to the Contracting Officer prior to completion of the work. Include:

a. Complete listing of all keys (AA1, AA2, etc.).
b. Complete listing of all key cuts (AA1-123456, AA2-123458).
c. Tabulation showing which key fits which door.
d. Copy of floor plan showing doors and door numbers.
e. Listing of 20 percent more key cuts than are presently required in each master system.

Products:

1. Template Hardware: Hardware to be applied to metal or to prefinished doors shall be made to template. Promptly furnish template information or templates to door and frame manufacturers. Template hinges shall conform to ANSI/BHMA A156.7. Coordinate hardware items to prevent interference with other hardware.

2. Hardware For Fire Doors And Exit Doors: Provide all hardware necessary to meet the requirements of NFPA 80 for fire doors and NFPA 101 for exit doors, as well as to other requirements specified, even if such hardware is not specifically mentioned under paragraph entitled "Hardware Schedule." Such hardware shall bear the label of Underwriters Laboratories, Inc., and be listed in UL BMD or labeled and listed by another testing laboratory acceptable to the Contracting Officer.

3. Hardware Items: Hinges, pivots, locks, latches, exit devices, bolts, and closers shall be clearly and permanently marked with the manufacturer's name or trademark where it will be visible after the item is installed. For closers with covers, the name or trademark may be beneath the cover.
   a. Hinges: ANSI/BHMA A156.1, 4 1/2 x 4 1/2 inches unless otherwise specified. Construct loose pin hinges for exterior doors and reverse-bevel interior doors so that pins will be nonremovable when door is closed. Other antifriction bearing hinges may be provided in lieu of ball-bearing hinges.
   b. Mortise Locks and Latches: ANSI/BHMA A156.13, Series 1000, Operational Grade 1, Security Grade 2. Provide mortise locks with escutcheons not less than 7 by 2 1/4 inches with a bushing at least 1/4 inch long. Cut escutcheons to suit cylinders and provide trim items with straight, beveled, or smoothly rounded sides, corners, and edges. Knobs and roses of mortise locks shall have screwless shanks and no exposed screws. All locksets and latchsets shall have lever handles. Locksets shall be compatible with the with the Reserves standard lock system.

c. Card Readers: Card Readers shall be as specified in Division 13.
d. Electric Strikes: Electric Strikes shall be as specified in Division 13.
e. Exit Devices: ANSI/BHMA A156.3, Grade 1. Provide adjustable strikes for rim type and vertical rod devices. Provide open back strikes for pairs of doors with mortise and vertical rod devices.
f. Cylinders and Cores: Cylinders and cores shall have seven pin tumblers interchangable type cores, conforming to ANSI/BHMA A156.5. Cylinders shall be products of one manufacturer, and cores shall be the products of one manufacturer. Design removable core system so that cores may be removed from the cylinders and used in any other mortise cylinders, rim cylinders or padlocks without any alteration to the core. To be considered 'equal' the locking system shall have interchangeable cores and the keys and cores milled to match the existing keyway system.
g. Keying System: Provide a keying system as required by the Government. Provide a construction keying system with interchangeable cores. Provide key cabinet as specified.
h. Lock Trim: Cast, forged, or heavy wrought construction and commercial plain design.
i. Lever Handles: Provide lever handles in lieu of knobs for all locksets and latchsets. Lever handles for exit devices shall meet the test requirements of ANSI/BHMA A156.13 for mortise locks. Lever handle locks shall have a breakaway feature (such as a weakened spindle or a shear key) to prevent irreparable damage to the lock when a force in excess of that specified in ANSI/BHMA A156.13 is applied to the lever handle. Lever handles shall return to within ½ inch of the door face.
j. Texture: Provide knurled or abrasive coated knobs or lever handles for doors which are accessible to blind persons and which lead to dangerous areas.
k. Keys: Furnish one file key, one duplicate key, and one working key for each key change. Furnish one additional working key for each lock of each keyed-alike group. Furnish 2 construction master keys, and 2 control keys for removable cores. Furnish a quantity of key blanks equal to 20 percent of the total number of file keys. Stamp each key with appropriate key control symbol and "U.S. property - Do not duplicate." Do not place room number on keys.

l. Door Bolts: ANSI/BHMA A156.16. Provide dustproof strikes for bottom bolts, except for doors having metal thresholds. Automatic latching flush bolts: ANSI/BHMA A156.3, Type 25.
m. Closers: ANSI/BHMA A156.4, Series C02000, Grade 1, with PT 4C. Provide with brackets, arms, mounting devices, fasteners, and other features necessary for the particular application. Size closers in accordance with manufacturer's recommendations, or provide multi-size closers, Sizes 1 through 6, and list sizes in the Hardware Schedule. Provide manufacturer's 10 year warranty.
n. Identification Marking: Engrave each closer with manufacturer's name or trademark, date of manufacture, and manufacturer's size designation located to be visible after installation.
o. Overhead Holders: ANSI/BHMA A156.8.
p. Closer Holder-Release Devices: ANSI/BHMA A156.15.
q. Door Protection Plates: ANSI/BHMA A156.6.
   1) Sizes of Mop and Kick Plates: Width for single doors shall be 2 inches less than door width; width for pairs of doors shall be 1 inch less than door width. Height of kick plates shall be 8 inches for flush doors. Height of armor plates shall be not less than 36 inches for flush doors .Height of mop plates shall be 4 inches.
r. Door Stops and Silencers: Wall stops shall conform to ANSI/BHMA A156.16, Type L02251. Silencers Type L03011. Provide three silencers for each single door, two for each pair.
s. Padlocks: ASTM F 883, Type P0-1, Option B: Keyed Padlock, with removable core.
t. Thresholds: ANSI/BHMA A156.21. Use J35100, with vinyl or silicone rubber insert in face of stop, handicapped accessible, for exterior doors opening out, unless specified otherwise.
u. Weather Stripping: A set shall include head and jamb seals, sweep strips, and, for pairs of doors, astragals. Air leakage of weather stripped doors shall not exceed 0.5 cubic fee of air per square foot of door area when tested in accordance with ASTM E 283. Weather stripping shall be one of the following:
v. Extruded Aluminum Retainers: Extruded aluminum retainers not less than 0.050 inch wall thickness with vinyl, neoprene, silicone rubber, or polyurethane inserts. Aluminum shall be clear (natural) anodized.

w. Rain Drips: Extruded aluminum, not less than 0.08 inch thick, clear anodized. Set drips in sealant conforming to Section 07900, "Joint Sealers," and fasten with stainless steel screws. Overhead Rain Drips; approximately 1 1/2 inches high by 2 1/2 inches projection, with length equal to overall width of door frame. Align bottom with door frame rabbet.

x. Special Tools: Provide special tools, such as spanner and socket wrenches and dogging keys, required to service and adjust hardware items.

y. Fasteners: Provide fasteners of proper type, quality, size, quantity, and finish with hardware. Fasteners exposed to weather shall be of nonferrous metal or stainless steel. Provide fasteners of type necessary to accomplish a permanent installation.

4. Finishes: ANSI/BHMA A156.18. Hardware shall have BHMA 630 finish (satin stainless steel), unless specified otherwise. Provide items not manufactured in stainless steel in BHMA 626 finish (satin chromium plated) over brass or bronze, except surface door closers which shall have aluminum paint finish, and except steel hinges which shall have BHMA 652 finish (satin chromium plated) . Hinges for exterior doors shall be stainless steel with BHMA 630 finish or chromium plated brass or bronze with BHMA 626 finish. Exit devices may be provided in BHMA 626 finish in lieu of BHMA 630 finish except where BHMA 630 is specified under paragraph entitled "Hardware Sets". Exposed parts of concealed closers shall have finish to match lock and door trim. Hardware for aluminum doors shall be finished to match the doors.

5. Key Cabinet And Control System: ANSI/BHMA A156.5, Type E8341 (125 hooks)

Sample Hardware Schedule: 1 Hardware for aluminum doors shall be provided under this section. Deliver Hardware templates and hardware, except field-applied hardware to the aluminum door and frame manufacturer for use in fabricating the doors and frames.

HW-1 (Office, non-rated, single)

1 1/2 Pairs Hinges	A8112 x 652
Lockset	F21
Kickplate	J102 x 630
Wall Bumper	L02251

HW-2 (Office, rated, single)

1 1/2 Pairs Hinges	A8112 x 652
Lockset	F21
Closer	C02011
Kickplate	J102 x 630
Wall Bumper	L02251
Smoke Seals	

HW-3 (Lavoratory, rated, single)

1 1/2 Pairs Hinges	A8112 x 652
Lockset	F01
Closer	C02011
Kickplate	J102 x 630
Wall Bumper	L02251
Smoke Seal	

SECTION 08810 - GLASS

Scope: 1. Provide glass and glazing for all applications, including without limitation, entrances and storefront, windows, glazed curtain wall, glazed doors, transoms, and sidelights, interior glazed partition walls, mirrors, and glass handrails.

References: 1. The publications referenced above (or below) establish minimum requirements for materials, systems and execution which may be specified in this Section.

AMERICAN NATIONAL STANDARDS INSTITUTE (ANSI)

ANSI Z97.1	Safety Performance Specifications and Methods of Test for Safety Glazing Materials Used in Buildings

AMERICAN SOCIETY FOR TESTING AND MATERIALS (ASTM)

ASTM C 509	Elastomeric Cellular Preformed Gasket and Sealing Material
ASTM C 669	Glazing Compounds for Back Bedding and Face Glazing of Metal Sash
ASTM C 864	Dense Elastomeric Compression Seal Gaskets, Setting Blocks, and Spacers
ASTM C 920	Elastomeric Joint Sealants
ASTM C 1036	Flat Glass
ASTM C 1048	Heat-Treated Flat Glass - Kind HS, Kind FT Coated and Uncoated Glass
ASTM C 1172	Laminated Architectural Flat Glass
ASTM D 395	Rubber Property - Compression Set
ASTM E 773	Accelerated Weathering of Sealed Insulating Glass Units
ASTM E 774	Classification of the Durability of Sealed Insulating Glass Units
ASTM E 1300	Determining the Minimum Thickness and Type of Glass Required to Resist a Specified Load

CODE OF FEDERAL REGULATIONS (CFR)

16 CFR 1201	Safety Standard for Architectural Glazing Materials

COMMERCIAL ITEM DESCRIPTION (CID)

CID A-A-378	(Basic) Putty Linseed Oil Type, (for Wood-Sash-Glazing)

GLASS ASSOCIATION OF NORTH AMERICA (GANA)

GANA Glazing Manual	Glazing Manual
GANA Standards Manual	Engineering Standards Manual

NATIONAL FIRE PROTECTION ASSOCIATION (NFPA)

NFPA 80	Fire Doors and Fire Windows
NFPA 252	Fire Tests of Door Assemblies
NFPA 257	Fire Tests for Window and Glass Block Assemblies

Submittals: 1. Product Data: Glass and glazing accessories; Manufacturer's descriptive product data, handling and storage recommendations, installation instructions, and cleaning instructions.

2. Shop Drawings: Drawings showing complete details of the proposed setting methods, mullion details, edge blocking, size of openings, frame details, materials, and types and thickness of glass.

3. Certificates: Certificates stating that the glass meets the specified requirements. Labels or manufacturers marking affixed to the glass will be accepted in lieu of certificates.

4. Samples: Samples of the following: insulating glass units, spandrel glass, etched glass.

Warranty: 1. Manufacturer shall warrant the insulating glass to be free of fogging or film formation on the internal glass surfaces caused by failure of the hermetic seal for a period of 10 years from Date of Substantial Completion. Warranty shall be signed by manufacturer.

System description: 1. Glazing systems shall be fabricated and installed watertight and airtight to withstand thermal movement and wind loading without glass breakage, gasket failure, deterioration of glazing accessories, and defects in the work. Glazed panels shall comply with the safety standards, as indicated in accordance with ANSI Z97.1. Glazed panels shall comply with indicated wind/snow loading in accordance with ASTM E 1300. All exterior glazing shall be laminated glass, the interior pane of insulated glass shall be laminated.

Product: 1. Clear Float Glass : Clear float glass shall be Type I transparent flat type, Class 1-clear, Quality q3 - glazing select, conforming to ASTM C 1036 1/4 inch thick.

2. Wired Glass : Wired glass shall be 6mm minimum thickness Type II flat type, Class 1 - translucent, Quality q8 - glazing, Form 1 - wired and polished both sides. Wire mesh shall be polished stainless steel Mesh 1 - diamond. Wired glass for fire-rated windows shall bear an identifying UL label or the label of a nationally recognized testing agency, and shall be rated for 45 minutes when tested in accordance with NFPA 257. Wired glass for fire-rated doors shall be tested as part of a door assembly in accordance with NFPA 252.

3. Insulating Glass: Insulating glass shall be Class a preassembled units of dual-seal construction consisting of lites of glass separated by an aluminum, steel, or stainless steel, spacer and dehydrated space conforming to ASTM E 773 and ASTM E 774. Spacer shall be roll-formed, with bent or tightly welded or keyed and sealed joints to completely seal the spacer periphery and eliminate moisture and hydrocarbon vapor transmission into airspace through the corners. Primary seal shall be compressed polyisobutylene and the secondary seal shall be a specially formulated silicone.

4. Low-E Laminated Insulating Glass:
   a. LowE Insulated Tempered Glass Units: Exterior pane shall consist of clear, tempered glass and the interior pane shall consist of laminated glass tempered glass, anti-reflective low-emissivity coating on No. 2 surface (inside surface of exterior pane). Glass performance shall be U-Value/Winter Nighttime 0.29, shading coefficient 0.43. Total thickness shall be 1 inch. Visible Light Transmittence 0.70.
   b. LowE Insulated Tempered Glass Units: Exterior pane shall consist of clear, float glass and the interior pane shall consist of laminated glass, anti-reflective low-emissivity coating on No. 2 surface (inside surface of exterior pane). Glass performance shall be U-Value/Winter Nighttime 0.29, shading coefficient 0.43. Total thickness shall be 1 inch. Visible Light Transmittence 0.70.
   c. LowE Tinted Insulated Tempered Glass Units: Exterior pane shall consist of tinted, tempered glass and the interior pane shall consist of laminated glass, anti-reflective low-emissivity coating on No. 2 surface (inside surface of exterior pane). Glass performance shall be U-Value/Winter Nighttime 0.31, shading coefficient 0.44. Total thickness shall be 1 inch. Visible Light Transmittence 0.65. Color shall be as selected.
   d. LowE Tinted Insulated Glass Units: Exterior pane shall consist of tinted, float glass and the interior pane shall consist of laminated glass, anti-reflective low-emissivity coating on No. 2 surface (inside surface of exterior pane). Glass performance shall be K-Value/Winter Nighttime 0.31, shading coefficient 0.44. Visible Light Transmittence 0.65. Total thickness shall be 1 inch. Color shall be as selected.

e. Reflective Insulated Tempered Glass Units: Exterior pane shall consist of tinted, tempered glass and the interior pane shall consist of laminated glass, stainless steel reflective coating on No. 2 surface (inside surface of exterior pane). Glass performance shall be U-Value/Winter Nighttime 0.43, shading coefficient 0.21. Total thickness shall be 1 inch. Visible Light Transmittence 0.15. Color shall be as selected.

f. Reflective Insulated Glass Units: Exterior pane shall consist of tinted, float glass and the interior pane shall consist of laminated glass, stainless steel reflective coating on No. 2 surface (inside surface of exterior pane). Glass performance shall be U-Value/Winter Nighttime 0.43, shading coefficient 0.21. Total thickness shall be 1 inch. Visible Light Transmittence 0.15. Color shall be as selected.

5. Heat-Treated Glass: Heat-treated glass shall conform to the following requirements.

6. Tempered Glass:

a. Tempered glass shall be 1/4 inch minimum thickness kind FT fully tempered transparent flat type, Class 1-clear, for interior applications and laminated for exterior windows and vestibules, Condition A uncoated surface, Quality q3 - glazing select, conforming to ASTM C 1048 and GANA Standards Manual.

b. Tempered etched glass shall be 1/4 inch minimum thickness kind FT fully tempered transparent flat type 1, Class 2, obscured, Grade B, for interior applications Quality q3, sandblasted or acid etched - glazing select, conforming to ASTM C 1048 and GANA Standards Manual. Provide pencil polished edges. Color shall be as selected.

7. Laminated Glass: Laminated glass shall be 1/4 inch minimum thickness and consist of two layers of tempered glass. Glass shall be bonded together with PVB interlayer under pressure, or alternatives such as resin laminates, conforming to requirements of 16 CFR 1201 and ASTM C 1172. Color shall be clear. All exterior glass shall be laminated.

8. Spandrel Glass: Ceramic-Opacified Insulated Spandrel Glass; Ceramic-opacified insulated spandrel glass shall be kind HS heat-strengthened transparent flat type, Condition B, coated with a colored ceramic material on No. 3 surface, Quality q3 - glazing select, conforming to ASTM C 1048, low-emissivity coating on No. 2 surface . Black spandrel coating on #6 surface. Interior pane shall be laminated. Total thickness shall be 1 inch. Glass performance shall be K-Value/Winter Nighttime 2.7, shading coefficient .39. Color shall be as selected by the Architect and approved by the Government.

9. Mirrors: Glass for mirrors shall be Type I transparent flat type, Class 1-clear, Glazing Quality q1 1/4 inch thick conforming to ASTM C 1036. Glass color shall be clear. Glass shall be coated on one surface with silver coating, copper protective coating, and mirror backing paint. Silver coating shall be highly adhesive pure silver coating of a thickness which shall provide reflectivity of 83 percent or more of incident light when viewed through 1/4 inch thick glass, and shall be free of pinholes or other defects. Copper protective coating shall be pure bright reflective copper, homogeneous without sludge, pinholes or other defects, and shall be of proper thickness to prevent "adhesion pull" by mirror backing paint. Mirror backing paint shall consist of two coats of special scratch and abrasion-resistant paint , and shall be baked in uniform thickness to provide a protection for silver and copper coatings which will permit normal cutting and edge fabrication.

10. Glazing Accessories:

a. Preformed Tape: Preformed tape shall be elastomeric rubber extruded into a ribbon of a width and thickness suitable for specific application. Tape shall be of type which will remain resilient, have excellent adhesion, and be chemically compatible to glass, metal, or wood.

b. Sealant: Sealant shall be elastomeric conforming to ASTM C 920, Type S or M, Grade NS, Class 12.5, Use G, of type chemically compatible with setting blocks, preformed sealing tape and sealants used in manufacturing insulating glass. Color of sealant shall be as selected to match adjacent surface.
c. Glazing Gaskets: Glazing gaskets shall be extruded with continuous integral locking projection designed to engage into metal glass holding members to provide a watertight seal during dynamic loading, building movements and thermal movements. Glazing gaskets for a single glazed opening shall be continuous one-piece units with factory-fabricated injection-molded corners free of flashing and burrs. Glazing gaskets shall be in lengths or units recommended by manufacturer to ensure against pull-back at corners. Glazing gasket profiles shall be as indicated on drawings.
d. Fixed Glazing Gaskets: Fixed glazing gaskets shall be closed-cell (sponge) smooth extruded compression gaskets of cured elastomeric virgin neoprene compounds conforming to ASTM C 509, Type 2, Option 1.
e. Wedge Glazing Gaskets: Wedge glazing gaskets shall be high-quality extrusions of cured elastomeric virgin neoprene compounds, ozone resistant, conforming to ASTM C 864, Option 1, Shore A durometer between 65 and 75.
f. Aluminum Framing Glazing Gaskets: Glazing gaskets for aluminum framing shall be permanent, elastic, non-shrinking, non-migrating, watertight and weathertight.
g. Putty and Glazing Compound: Glazing compound shall conform to ASTM C 669 for face-glazing metal sash. Putty shall be linseed oil type conforming to CID A-A-378for face-glazing primed wood sash. Putty and glazing compounds shall not be used with insulating glass or laminated glass.
Setting and Edge Blocking: Neoprene setting blocks shall be dense extruded type conforming to ASTM D 395, Method B, Shore A durometer between 70 and 90. Edge blocking shall be Shore A durometer of 50 (+ or - 5). Silicone setting blocks shall be required when blocks are in contact with silicone sealant. Profiles, lengths and locations shall be as required and recommended in writing by glass manufacturer.

SECTION 08840 – PLASTIC GLAZING

Scope: 1. Transparent and translucent plastic glazing for general and special purpose applications.

References: 1. The publications referenced above (or below) establish minimum requirements for materials, systems and execution which may be specified in this Section.

AMERICAN SOCIETY FOR TESTING AND MATERIALS (ASTM)

ASTM B 221 Aluminum and Aluminum-Alloy Extruded Bars, Tods, Wire, Profile and Tubes
ASTM C 236 Steady-State Thermal Performance of Building Assemblies by Means of Guarded Hot Box
ASTM D 2244 Calculations of Color Differences From Insturmentally Measured Colored Coordinates
ASTM C 920 Elastomeric Joint Sealants

Submittals: 1. Product Data: Data composed of catalog cuts, brochures, cleaning directions, and compatible cleaning agents. Manufacturer's installation instructions.

2. Samples: Three samples of each indicated material. Samples of plastic sheets shall be minimum 5 by 7 in.

3. Certificates: Certificates stating that the plastic sheets and glazing material meet the specified requirements.

Warranty: 1. Manufacturer's standard performance guarantees or warranties that extend beyond a 1 year period shall be provided.

Products: 1. Translucent Wall Panels: Translucent wall panels shall be as manufactured by Kalwall Corporation or equal, manufactured from glass fiber reinforced thermoset resins adhesively laminated under heat and pressure to

an interlocking aluminum grid frame. Interior and exterior face sheets shall be Crystal.

a. Performance Criteria: Thermal Performance: U factor of 0.53 when tested in accordance with ASTM C 236.
b. Light Transmission: 50 percent.
c. Shading Coefficient: 0.85.
d. Color Stability: Exterior face sheets shall not change color more than 3.0 units (Delta E according to ASTM D 2244) after five years of weathering.
e. Impact Resistance: Provide exterior face sheet with impact resistance of 60 lbf-ft.
f. Design and size the components to withstand dead and live loads caused by positive and negative wind pressure acting normal to plane of wall as calculated in accordance with local code to a design pressure of 102 psf a as measured in accordance with ANSI/ASTM E 330.

2. Framing Materials: Aluminum frame shall be in accordance with ASTM B 221, 6063-T5, extruded aluminum I-beam sections.

3. Glazing Tape: Glazing tape shall be fully-cured synthetic rubber, or plastic composition; and shall be unreinforced, 100 percent solid, resilient, nonsagging, nonstaining, and noncrazing. The tape shall be pressure sensitive. The tape shall be capable of sealing out moisture, air, and dust when compressed to the extent recommended by the glazing tape manufacturer for the extensibility requirements of the joint. The tape shall be furnished in the proper width and depth for the particular application in order to obtain the required degree of compression when installed in the joint. The tape shall withstand temperatures of minus 40 degrees F up to 160 degrees F without bleeding, cracking, flowing, or showing signs of deterioration. Tape color shall be aluminum color to match framing.

4. Sealant: Sealant shall conform to ASTM C 920, Grade NS, Class 25; Use G. Sealant shall be gray or neutral color for glazing in wood, steel, or color finished aluminum, and aluminum color for glazing in natural color aluminum.

5. Glazing Accessories: Glazing accessories shall be as required to supplement the items to be glazed including glazing points and spacer shims. Ferrous metal accessories shall have a finish that will not stain or corrode while in service. Spacer shims shall be of material and of dimensions recommended by the plastic sheet manufacturer.

6. Primary and secondary sealants: As recommended by system manufacturer.

DIVISION 9 - FINISHES

SECTION 09250 - GYPSUM BOARD

Scope: 1. Provide gypsum drywall work including metal support systems:
a. Interior walls, partitions, and ceilings.

References: 1. The publications referenced above (or below) establish minimum requirements for materials, systems and execution which may be specified in this Section.

AMERICAN NATIONAL STANDARDS INSTITUTE (ANSI)

ANSI A108.11	Interior Installation of Cementitious Backup Units
ANSI A118.9	Test Methods and Specifications for Cementitious Backer Units

AMERICAN SOCIETY FOR TESTING AND MATERIALS (ASTM)

ASTM A 580/A 580M	Stainless Steel Wire
ASTM A 853	Steel Wire, Carbon, for General Use
ASTM B 164	Nickel-Copper Alloy Rod, Bar, and Wire
ASTM C 36/C 36M	Gypsum Wallboard
ASTM C 475	Joint Compound and Joint Tape for Finishing Gypsum Board
ASTM C 557	Adhesive for Fastening Gypsum Wallboard to Wood Framing
ASTM C 630/C 630M	Water-Resistant Gypsum Backing Board
ASTM C 645	Nonstructural Steel Framing Members
ASTM C 754	Installation of Steel Framing Members to Receive Screw-Attached Gypsum Panel Products
ASTM C 840	Application and Finishing of Gypsum Board
ASTM C 931/C 931M	Exterior Gypsum Soffit Board
ASTM C 955	Load-Bearing (Transverse and Axial) Steel Studs, Runners (Tracks), and Bracing or Bridging for Screw Application of Gypsum Panel Products and Metal Plaster Bases
ASTM C 1002	Steel Drill Screws for the Application of Gypsum Panel Products or Metal Plaster Bases
ASTM C 1047	Accessories for Gypsum Wallboard and Gypsum Veneer Base
ASTM C 1177/C 1177M	Glass Mat Gypsum Substrate for Use as Sheathing
ASTM C 1178/C 1178M	Glass Mat Water-Resistant Gypsum Backing Panel

GYPSUM ASSOCIATION (GA)

GA 214	Recommended Levels of Gypsum Board Finish
GA 216	Application and Finishing of Gypsum Board
GA 600	Fire Resistance Design Manual

UNDERWRITERS LABORATORIES (UL)

UL Fire Resist Directory	Fire Resistance Directory (2 Vol.)

System Description:

1. Fire-Rated Construction: Joints of fire-rated gypsum board enclosures shall be closed and sealed in accordance with UL test requirements or GA requirements, and as required to meet pressurization requirements. Penetrations through rated partitions and ceilings shall be sealed tight in accordance with tested systems.

2. Pressurized Enclosures: Pressurized fire-rated gypsum board enclosures shall allow the mechanical and electrical life-safety systems to operate in accordance with the design intent. Air pressure within elevator shaft shall be 7.5 psf. Air pressure within stair shaft shall be 5 psf. Maximum mid-span deflection shall be L/360.

3. Seismic Requirements: For lateral supports of partitions and suspended ceilings required for seismic bracing, construct the Work as specified herein and to meet applicable codes, ordinances and regulations.

Submittals:

1. Product Data: Steel Framing, Control Joints, Gypsum Board, Trim, Mouding and Accessories, Fasteners and Adhesives, Cementitious Backer Units;

2. Certificates: Certificates stating that the steel framing and gypsum wallboard meet the specified requirements.

Products:

1. Non-Loadbearing Stud Walls
   a. Studs for non-loadbearing walls shall conform to ASTM C 645. Studs shall be C-shaped, roll formed steel with minimum uncoated design thickness of 0.0396 in made from G40 hot-dip galvanized coated sheet.
   b. Runner Tracks: Floor and ceiling runner tracks shall conform to ASTM C 645. Tracks shall be prefabricated, U-shaped with minimum 1 inch flanges, unpunched web, thickness to match studs, made from G40 hot-dip galvanized coated sheet.

2. Loadbearing Stud Walls:
   a. Studs for loadbearing walls shall conform to ASTM C 955. Studs shall be C-shaped roll formed steel made from minimum G60 hot-dip galvanized coated sheet. Stud sizes and base metal design thickness shall be as shown.
   b. Runner Tracks: Floor and ceiling runner tracks shall conform to ASTM C 955. Runners shall be prefabricated, U-shaped with minimum 3/4 inch flanges, unpunched web, thickness to match studs, made from G60 hot-dip galvanized coated sheet.
   c. Bridging: Bridging for loadbearing walls shall conform to ASTM C 955. Bridging shall be minimum 3/4 x 3/4 inch cold-rolled steel channel with weld attachment clips at each stud or V-bar type weld or screw attached to each stud flange. Bridging shall be adequate to provide lateral support for the stud.

4. Suspended Ceiling Framing: Suspended ceiling framing system shall have the capability to support the finished ceiling, light fixtures, air diffusers, and accessories, as shown. The suspension system shall have a maximum deflection of L/240. Carrying channels shall be formed from minimum 18 ga thick cold-rolled steel, 1-1/2 x 3/4 inch. Furring members shall be formed from cold-rolled steel, 7/8 x 2-9/16 inch. Carrying channels and furring members shall be made from hot-dip galvanized coated sheet.

5. Gypsum Board: Gypsum board shall be asbestos-free. Gypsum board shall have square-cut ends, tapered or beveled edges and shall be maximum possible length. Gypsum board thickness shall be as shown.
   a. Standard Gypsum Board: Regular gypsum board shall conform to ASTM C 36/C 36M, and shall be 4 feet wide.
   b. Fire-Rated Gypsum Board: Fire-rated gypsum board shall conform to ASTM C 36/C 36M, and shall be Type X or Type C as required, 4 feet wide.
   c. Water-Resistant Gypsum Board: Water-resistant gypsum board shall conform to ASTM C 630/C 630M, regular or Type X where required for fire rating, with water-resistant paper faces, paintable surfaces, and shall be 4 feet width and maximum permissible length.
   d. Exterior Gypsum Soffit Board: Exterior gypsum soffit board shall conform to ASTM C 931/C 931M, regular Type X where required for fire rating, 48 inches wide.
   e. Exterior Sheathing Board: Glass mat gypsum sheathing shall conform to ASTM C 1177/C 1177M, and as specified in Section 06100 ROUGH CARPENTRY.
   f. Water-Resistant Gypsum Backing Panel: Glass mat water-resistant gypsum backing panels shall conform to ASTM C 1178/C 1178M, Type X where required for fire rated construction, shall have a water-resistant core with water and mold/mildew resistant fiberglass faces imbedded into the core and shall have square edges thickness shall be as indicated on the drawings or as required for fire rating.
   g. Shaftwall liner panel shall conform to UL listing. Liner Panel shall be specifically manufactured for cavity shaftwall system, with water-resistant paper faces, bevel edges, single lengths to fit required conditions, 1 inch thick, by 24 inches wide

6. Trim, Moldings, And Accessories:
   a. Taping and embedding compound shall conform to ASTM C 475. Compound shall be specifically

formulated and manufactured for use in embedding tape at gypsum wallboard joints and fastener heads, and shall be compatible with tape and substrate.

b. Finishing or topping compound shall conform to ASTM C 475. Compound shall be specifically formulated and manufactured for use as a finishing compound for gypsum board.
c. All-purpose compound shall be specifically formulated and manufactured to use as a taping and finishing compound, and shall be compatible with tape and substrate.
d. Joint tape shall conform to ASTM C 475 and shall be as recommended by gypsum board manufacturer.
e. Trim, Control Joints, Beads, Stops and Nosings: Items used to protect edges, corners, and to provide architectural features shall be in accordance with ASTM C 1047.

7. Fastenings And Adhesives:
   a. Screws: Screws shall conform to ASTM C 1002. Screws shall be self-drilling and self-tapping steel, Type G for gypsum board to gypsum board and Type S for wood or light-gauge steel framing.
   b. Adhesives: Adhesives shall conform to ASTM C 557. Adhesives shall be formulated to bond gypsum board to wood framing members. For securing gypsum board to metal framing, adhesive shall be as recommended by gypsum board manufacturer.
   c. Hangers: Suspended ceiling runner channel hangers shall be soft, annealed steel wire not less than No. 8 SWG, conforming to ASTM A 853.
   d. Wire and Clip Type Fastenings: Tie wire, clips, rings, and other fastenings shall be corrosion-resisting steel conforming to ASTM A 580/A 580M, composition 302, 304, or 316, Condition A, or nickel-copper alloy conforming to ASTM B 164, annealed condition except that walls, partitions, and other vertical surfaces not incorporated in ceiling construction may be erected with soft, annealed steel conforming to ASTM A 853.
   e. Tie Wire: Tie wire for constructing partitions and vertical furring, for securing metal lath to supports, and for lacing shall be not less than No. 18 SWG. Tie wire for other applications shall be not less than No. 16 SWG.
   f. Clips: Clips used in lieu of tie wire for securing the furring channels to the runner channels in ceiling construction shall be made from strip not less than 1/8 inch thick or shall be hairpin clip, formed of wire not less than 0.01620 inch nominal diameter. Other clips and rings or fastenings of similar materials shall be equivalent in holding power to that provided by tie wire for the specific application.

8. Cementitious Backer Units: Cementitious backer units shall comply with ANSI A118.9.

Execution:

1. Steel framing and furring members shall be installed in accordance with ASTM C 754

2. Suspended ceiling system framing shall be installed in accordance with ASTM C 754.

3. Main runner channels shall be installed in accordance with ASTM C 754.

4. Furring channels shall be spaced in accordance with ASTM C 754.

5. Gypsum board shall be installed in accordance with ASTM C 840, GA 214 and GA 216 and as specified. Paragraph 17.3.1 GENERAL of ASTM C 840 which permits usage of water resistant gypsum board as a base for adhesive application of ceramic or plastic tile on ceilings, does not apply

6. Two-Ply Gypsum Board: Second layer of gypsum board shall be applied perpendicular to first layer with joints staggered and secured with mechanical fasteners or adhesive. The use of adhesive shall be in accordance with ASTM C 840.

7. Trim, moldings and accessories shall be installed in accordance with GA 216.

8. Finish: Gypsum board shall be finished in accordance with ASTM C 840, GA 214 and GA 216. Plenum areas

above ceilings shall be finished to Level 1 in accordance with GA 214. Water resistant gypsum backing board, ASTM C 630/C 630M, to receive ceramic tile shall be finished to Level 2 in accordance with GA 214. Walls and ceilings to receive a heavy-grade wall covering or heave textured finish before painting shall be finished to Level 3 in accordance with GA 214. Walls and ceilings without critical lighting to receive flat paints, light textures, or wall coverings shall be finished to Level 4 in accordance with GA 214. Unless otherwise specified, all gypsum board walls, partitions and ceilings shall be finished to Level 5 in accordance with GA 214.

9. Cementitious backer units shall be installed in accordance with ANSI A108.11. Fasteners shall be the type designed for cement board application.

10. Gypsum wallboard construction for fire-rated assemblies shall be in accordance with UL Fire Resist Dir, or GA 600 for the design number indicated on drawings.

SECTION 09310 – CERAMIC TILE

Scope: 1. Provide ceramic, porcelean and quarry tile work for walls and floors.

References: 1. The publications referenced above (or below) establish minimum requirements for materials, systems and execution which may be specified in this Section.

AMERICAN NATIONAL STANDARDS INSTITUTE (ANSI)

ANSI A108.1A	Installation of Ceramic Tile in the Wet-Set Method, with Portland Cement Mortar
ANSI A108.1B	Installation of Ceramic Tile on a Cured Portland Cement Mortar Setting Bed with Dry-Set or Latex Portland Cement Mortar
ANSI A108.4	Installation of Ceramic Tile with Organic Adhesives or Water Cleanable Tile Setting Epoxy Adhesive
ANSI A108.5	Installation of Ceramic Tile with Dry-Set Portland Cement Mortar or Latex-Portland Cement Mortar
ANSI A108.6	Installation of Ceramic Tile with Chemical Resistant, Water Cleanable Tile-Setting and Grouting Epoxy
ANSI A108.8	Installation of Ceramic Tile with Chemical Resistant Furan Mortar and Grout
ANSI A108.10	Installation of Grout in Tilework
ANSI A118.1	Dry-Set Portland Cement Mortar
ANSI A118.2	Conductive Dry-Set Portland Cement Mortar
ANSI A118.3	Chemical Resistant, Water Cleanable Tile Setting and Grouting Epoxy and Water Cleanable Tile Setting Epoxy Adhesive
ANSI A118.4	Latex-Portland Cement Mortar
ANSI A118.5	Chemical Resistant Furan Mortars and Grouts for Tile
ANSI A118.6	Ceramic Tile Grouts
ANSI A118.9	Test Methods and Specifications for Cementitious Backer Units
ANSI A136.1	Organic Adhesives for Installation of Ceramic Tile
ANSI A137.1	Ceramic Tile

AMERICAN SOCIETY FOR TESTING AND MATERIALS (ASTM)

ASTM A 185	Steel Welded Wire Fabric, Plain, for Concrete Reinforcement
ASTM C 33	Concrete Aggregates

ASTM C 144	Aggregate for Masonry Mortar
ASTM C 150	Portland Cement
ASTM C 206	Finishing Hydrated Lime
ASTM C 207	Hydrated Lime for Masonry Purposes
ASTM C 241	Abrasion Resistance of Stone Subjected to Foot Traffic
ASTM C 373	Water Absorption, Bulk Density, Apparent Porosity, and Apparent Specific Gravity of Fired Whiteware Products
ASTM C 482	Bond Strength of Ceramic Tile to Portland Cement
ASTM C 501	Relative Resistance to Wear of Unglazed Ceramic Tile by the Taber Abraser
ASTM C 648	Breaking Strength of Ceramic Tile
ASTM C 847	Metal Lath
ASTM C 1026	Measuring the Resistance of Ceramic Tile to Freeze-Thaw Cycling
ASTM C 1027	Determining Visible Abrasion Resistance of Glazed Ceramic Tile
ASTM C 1028	Determining the Static Coefficient of Friction of Ceramic Tile and Other Like Surfaces by the Horizontal Dynamometer Pull-Meter Method
ASTM C 1178/C 1178M	Glass Mat Water-Resistant Gypsum Backing Panel

MARBLE INSTITUTE OF AMERICA (MIA)

MIA Design Manual	Design Manual IV Dimensional Stone

NATIONAL FIRE PROTECTION ASSOCIATION (NFPA)

NFPA 99	Health Care Facilities

TILE COUNCIL OF AMERICA (TCA)

TCA Handbook	Handbook for Ceramic Tile Installation

U.S. NATIONAL ARCHIVES AND RECORDS ADMINISTRATION (NARA)

36 CFR 1191Americans with Disabilities Act (ADA) Accessibility Guidelines for Buildings and Facilities

Submittals:

1. Product Data: Manufacturer's catalog data. Manufacturers preprinted installation and cleaning instructions.

2. Samples: Samples of sufficient size to show color range, pattern, type and joints.

3. Test Reports: Copy of results for electrical resistance tests

4. Certificates: Certificates indicating conformance with specified requirements. A master grade certificate shall be furnished for tile.

Warranty:

1. Manufacturer's standard performance guarantees or warranties that extend beyond a 1-year period shall be provided.

Products:

1. Tile shall be standard grade conforming to ANSI A137.1. Containers shall be grade sealed. Seals shall be marked to correspond with the marks on the signed master grade certificate. Tile shall be impact resistant with a minimum breaking strength for wall tile of 90 lbs and 250 lbs for floor tile in accordance with ASTM C 648. Tile for cold climate projects shall be rated frost resistant by the manufacturer as determined by ASTM C 1026. Water absorption shall be 0.50 maximum percent in accordance with ASTM C 373. Floor tile shall have a minimum coefficient of friction of 0.60 wet and dry in accordance with ASTM C 1028. Floor tile shall be unglazed, Class III-Medium Heavy Traffic, durability classification as rated by the manufacturer when tested in accordance with ASTM C 1027 for abrasion resistance as related to foot traffic. Tile size and color

shall be as selected by the Architect and approved by the Government.

2. Mosaic Tile: Ceramic mosaic tic tile and trim shall be unglazed porcelean unpolished with sharply formed face. Tile size and color shall be as selected by the Architect and approved by the Government.

3. Quarry Tile: Quarry tile and trim shall be unglazed with non-slip surface. Tile size and color shall be as selected by the Architect and approved by the Government.

4. Porcelain Tile: Porcelain tile and trim shall be unglazed with color extending uniformally through the body of the tile. Tile shall meet or exceed the following criteria: Abrasive wear in accordance with ASTM C 501 and bonding strength in accordance with ASTM C 482. Tile shall comply with 36 CFR 1191 for coefficient of friction for interior floors. Tile size and color shall be as selected by the Architect and approved by the Government.

5. Glazed Wall Tile: Glazed wall tile and trim shall be cushioned edge with bright glaze. Tile size and color shall be as selected by the Architect and approved by the Government.

6. Setting-Bed: The setting-bed shall be composed of the following:
   a. Aggregate for Concrete Fill: Aggregate shall conform to ASTM C 33. Maximum size of coarse aggregate shall not be greater than one-half the thickness of concrete fill.
   b. Portland Cement: Cement shall conform to ASTM C 150, Type I, white for wall mortar and gray for other uses.
   c. Sand: Sand shall conform to ASTM C 144.
   d. Hydrated Lime: Hydrated lime shall conform to ASTM C 206, Type S or ASTM C 207, Type S.
   e. Metal Lath: Metal lath shall be flat expanded type conforming to ASTM C 847, and weighing not less than 2.5 pounds per square yard..
   f. Reinforcing Wire Fabric: Wire fabric shall conform to ASTM A 185. Wire shall be either 2 x 2 inch mesh, 16/16 wire or 1-1/2 x 2 inch mesh, 16/13 wire.
   g. Water: Water shall be potable.

7. Mortar, grout, and adhesive shall conform to the following:
   a. Dry-Set Portland Cement Mortar: ANSI A118.1.
   b. Conductive Dry-Set Mortar: ANSI A118.2.
   c. Latex-Portland Cement Mortar: ANSI A118.4.
   d. Ceramic Tile Grout: ANSI A118.6; latex-portland cement grout.
   e. Organic Adhesive: ANSI A136.1, Type I.
   f. Epoxy Resin Grout: ANSI A118.3.
   g. Furan Resin Grout: ANSI A118.5 and consist of an intimate mixture of furfuryl-alcohol resin with carbon filler and catalyst.
   h. Color shall be as selected by the Architect and approved by the Government

8. Cementitious backer units, for use as title substrate over and walls, shall be in accordance with ANSI A118.9. Cementitious backer units shall be ½ inch thick.

9. Glass Mat Gypsum Backer Panel: Glass mat water-resistant gypsum backer board, for use as tile substrate over walls, shall be in accordance with ASTM C 1178/C 1178M. Glass mat gypsum backer board shall be 1/2 inch thick.

10. Marble Thresholds: Marble thresholds shall be of size required by drawings or conditions. Marble shall be Group A as classified by MIA Design Manual. Marble shall have a fine sand-rubbed finish and shall be white in color as approved by the Contracting Officer. Marble abrasion shall be not less than 12.0 when tested in accordance with ASTM C 241.

SECTION 09510 - ACOUSTICAL CEILINGS

Scope: 1. Provide acoustical ceilings, hangers and metal suspension system.

References: 1. The publications referenced above (or below) establish minimum requirements for materials, systems and execution which may be specified in this Section.

AMERICAN SOCIETY FOR TESTING AND MATERIALS (ASTM)

ASTM C 635	Manufacture, Performance, and Testing of Metal Suspension Systems for Acoustical Tile and Lay-In Panel Ceilings
ASTM C 636	Installation of Metal Ceiling Suspension Systems for Acoustical Tile and Lay-In Panels
ASTM E 580	Application of Ceiling Suspension Systems for Acoustical Tile and Lay-In Panels in Areas Requiring Moderate Seismic Restraint
ASTM E 1264	Standard Classification for Acoustical Ceiling Products
ASTM E 1414	Standard Test for Airborne Sound Attenuation Between Rooms Sharing a Common Ceiling Plenum

U.S. ARMY CORPS OF ENGINEERS (USACE)

TI 809-04	Seismic Design for Buildings

Submittals: 1. Shop Drawings: Drawings showing suspension system, method of anchoring and fastening, details, and reflected ceiling plan.

2. Product Data: Manufacturer's descriptive data, catalog cuts, and installation instructions. Submittals which do not provide adequate data for the product evaluation will be rejected.

3. Samples: Two samples of each type of acoustical unit and each type of suspension grid tee section showing texture, finish, and color.

4. Test Reports: Reports by an independent testing laboratory attesting that acoustical ceiling systems meet specified sound transmission requirements.

5. Certificates: Certificate attesting that the mineral based acoustical units furnished for the project contain recycled material and showing an estimated percent of such material.

General Requirements: 1. Acoustical treatment shall consist of sound controlling units mechanically mounted on a ceiling suspension system. The unit size, texture, finish, and color shall be as specified.

Seismic Requirements: 1. For lateral support of ceiling suspension systems required for seismic bracing, construct the Work as specified herein and in compliance with applicable codes, ordinances, and regulations. Comply with requirements of ASTM E 580 and TI 809-04 for installation of ceiling suspension systems requiring seismic restraint.

Warranty: 1. Manufacturer's standard performance guarantees or warranties that extend beyond a one year period shall be provided. Standard performance guarantee or warranty shall contain an agreement to repair or replace acoustical panels that fail within the warranty period. Failures include, but are not limited to, sagging and warping of panels; rusting and manufacturers defects of grid system.

Extra Materials: 1. Spare tiles of each color shall be furnished at the rate of 5 tiles for each 100 tiles installed. Tiles shall be from the same lot as those installed.

Products: 1. Acoustical panels: Acoustical units shall conform to ASTM E 1264, Class A, and the following requirements:
a. Units for Exposed-Grid System ACT-1: Type: III (mineral fiber with painted finish), wet felted. Type III acoustical units shall have a minimum recycled material content of 18 percent.
b. Minimum NRC: 0.55 when tested on mounting No. E-400
c. Pattern: Difis sured, non-directional
d. Nominal size: 24" x 24" (600 by 600 mm).
e. Edge detail: Tegular/reveal with beveled edge.
f. Finish: Factory-applied vinyl latex paint, non-directional. Color: White.
g. Minimum LR coefficient: 0.80.
h. Minimum CAC: 35.

2. Suspension System: Suspension system shall be standard exposed-grid standard width flange, and shall conform to ASTM C 635 for intermediate-duty systems. Surfaces exposed to view shall be aluminum or steel with a factory-applied white baked-enamel finish. Wall molding shall have a flange of not less than15/16 inch. Inside and outside corner caps. Standard corners shall be provided. Suspended ceiling framing system shall have the capability to support the finished ceiling, light fixtures, air diffusers, and accessories, as shown. The suspension system shall have a maximum deflection of 1/360 of span length. Seismic details shall conform to the guidance in TI 809-04 and ASTM E 580 .

3. Hangers: Hangers shall be galvanized steel wire. Hangers and attachment shall support a minimum 300 pound ultimate vertical load without failure of supporting material or attachment.

4. Ceiling Attenuation Class And Test: Ceiling attenuation class (CAC) range of acoustical units, when required, shall be determined in accordance with ASTM E 1414. Test ceiling shall be continuous at the partition and shall be assembled in the suspension system in the same manner that the ceiling will be installed on the project. System shall be tested with all acoustical units installed.

Execution: 1. Suspension System: Suspension system shall be installed in accordance with ASTM C 636 and ASTM E 580 for seismic restraint and as specified herein. There shall be no hanger wires or other loads suspended from underside of steel decking.

SECTION 09650 - RESILIENT FLOORING

Scope: 1. Provide resilient flooring and base.

References: 1. The publications referenced above (or below) establish minimum requirements for materials, systems and execution which may be specified in this Section.

AMERICAN SOCIETY FOR TESTING AND MATERIALS (ASTM)

ASTM D 4078	Water Emulsion Floor Polish
ASTM E 648	Critical Radiant Flux of Floor-Covering Systems Using a Radiant Heat Energy Source
ASTM E 662	Specific Optical Density of Smoke Generated by Solid Materials
ASTM F 150	Electrical Resistance of Conductive and Static Dissapative Resilient Flooring

ASTM F 1066	Vinyl Composition Floor Tile
ASTM F 1700	Solid Vinyl Floor Tile

Fire Resistant Requirements: 1. Flooring in corridors and exits shall have a minimum average critical radiant flux of 0.45 watts per square centimeter when tested in accordance with ASTM E 648. The smoke density rating shall be less than 450 when tested in accordance with ASTM E 662.

Submittals:

1. Product Data: Manufacturer's descriptive data and installation instructions including cleaning and maintenance instructions for each type of flooring and accessories specified.

2. Samples: Three samples of each indicated color and type of flooring and base. Sample size shall be minimum 2 1/2 inch x 4 inch except VCT shall be 12 inch by 12 inch, showing the full range of color and pattern. Sample size for base shall be a minimum length of 12 inches.

3. Test Reports: Copies of test reports showing that representative product samples of the flooring proposed for use have been tested by an independent testing laboratory within the past three years or when formulation change occurred and conforms to the requirements specified.

Warranty:

1. Manufacturer's standard performance guarantees or warranties that extend beyond a one year period shall be provided.

Extra Materials:

1. Extra flooring material of each color and pattern shall be furnished at the rate of 5 percent of total of each color shall be furnished. Extra materials shall be from the same lot as those installed. Extra base material composed of 6 m of each color shall be furnished.

Products:

1. Vinyl-Composition Tile Type: Vinyl-composition tile shall conform to ASTM F 1066, Class 2, (through pattern tile), Composition 1, asbestos-free. Tile shall have the color and pattern uniformly distributed throughout the thickness of the tile. Flooring in any one continuous area shall be from the same lot and shall have the same shade and pattern. Tile size, pattern, and color shall be as selected by the Architect and approved by the Government.

2. Static Dissipative Vinyl: Static Dissipative Vinyl Tile shall conform to ASTM F 1066, Class 2, (through pattern tile), Composition 1, asbestos- free or shall conform to ASTM F 1700 Class I (monolithic vinyl tile), Type A. Tile shall have an Electrical Resistance of 10e6 to 10e9 in accordance with ASTM F 150. Tile shall have the color and pattern uniformly distributed throughout the thickness of the tile. Flooring in any one continuous area shall be from the same lot and shall have the same shade and pattern. Tile size, pattern, and color shall be as selected by the Architect and approved by the Government.

3. Rubber Flooring Type: Rubber tile shall conform to ASTM F 1344 Class I homogeneous construction type A or Type B and limited to virgin rubber.
   a. Open grid rubber shower floor tile shall be Fungus and mildew resistant, recycled flexible vinyl. Tile size, pattern, and color shall be as selected by the Architect and approved by the Government.
   b. Rubber athletic floor tile, with etched surface pattern.. Tile size, pattern, and color shall be as selected by the Architect and approved by the Government.
   c. Embossed surface solid vinyl floor tile with an embossed surface. Solid vinyl tile shall conform to ASTM F 1700 Class I, Type B. Tile size, pattern, and color shall be as selected by the Architect and approved by the Government.
   d. Stair Treads, Risers, And Stringers; Treads, risers, and stringers shall conform to composition rubber compounded from a mixture of synthetic and reclaimed rubber. Overall thickness at treads shall be not less than 1/8 inch . Durometer hardness shall be 90, plus or minus 5, when tested in accordance with ASTM D 2240. Design shall be either a one piece nosing/tread/riser or a two piece nosing/tread with a matching coved riser. Installation shall include stringer angles on both the wall and banister sides, and

landing trim. Surface of treads shall be raised diamond. Tile size, pattern, and color shall be as selected by the Architect and approved by the Government.

4. Resilient Base: Base shall be manufacturers standard rubber, straight style (installed with carpet), coved style (installed with resilient flooring). Base shall be 4 inches high. Preformed outside corners shall be furnished. Color shall be as selected by the Architect and approved by the Government.

5. Transition Strip: A rubber transition strip tapered to meet abutting material shall be provided. Color shall be as selected by the Architect and approved by the Government.

6. Adhesive: Adhesive for flooring and wall base shall be as recommended by the flooring manufacturer.

7. Polish: Polish shall conform to ASTM D 4078

SECTION 09670 – FLUID APPLIED FLOORING

Scope: 1. Industrial resin based flooring for areas requiring spill containment and where chemical spills are likely or for explosive or ammunition facilities.

References: 1. The publications referenced above (or below) establish minimum requirements for materials, systems and execution which may be specified in this Section.

AMERICAN SOCIETY FOR TESTING AND MATERIALS (ASTM)

ASTM C 722 Chemical-Resistant Resin Monolithic Surfacings

Submittals: 1. Shop Drawings: Drawings indicating the type and layout of the floor system, typical and project-specific applications, flashing and termination details, and expansion joint details..

2. Product Data: Industrial resin-based flooring manufacturer's descriptive data, mixing, proportioning, and installation instructions. Maintenance literature for resinous flooring shall be included.

3. Samples: Two 6 inch x 6 inch, (minimum) samples of each color of industrial resinous flooring.

4. Certificates: Certificates indicating conformance with specified requirements and flooring manufacturer's approval of the flooring applicator. Certificate from an approved laboratory showing that the resinous floor coating has been tested and meets the requirements specified

Products: 1. Trowel or spray applied, epoxy, polyester, or other resinous material conforming to ASTM C 722 with Type A surfacings (chemical resistance and moderate to heavy traffic resistance). Chemical resistance shall be as indicated.

2. Protective Top Coat: Shall be as recommended by the base coat manufacturer.

3. Chemical Resistance: Industrial resin-based flooring shall be chemically resistant based on a 7 day total immersion test for the following chemicals: Sulfuric acid, phosphoric acid, acetic acid, and sodium hydroxide at 50 percent solution.

4. Pimer: Primer shall be a material recommended by the industrial resin-based flooring manufacturer which will penetrate the pores of the substrate and bond with the topping to form a permanent monolithic bond

between the substrate and the topping.

5. Resin: Resin shall be suitable for the type application indicated.

6. Fillers: Fillers, if required, shall be inert silica, quartz or other hard aggregate material as recommended by the flooring manufacturer. Fillers shall be furnished in the quantity necessary to impart the required color and physical characteristics. The filler shall contain sufficient fines to provide an even-textured, nonslip type of surface on the finished topping.

7. Sealer: Sealer shall be a product recommended by the industrial resin-based flooring manufacturer. When applied to the resin topping and dry, it shall be nonslip and resistant to staining.

8. Wall Base: Self-coving shall consist of industrial resin-based flooring coved up at the base 12 inches high minimum or as required for containment. Coved base shall be the same thickness as the flooring.

Execution: 1. Testing

a. Liquid Retention: When required, and after the system is cured, the membrane on horizontal and vertical surfaces shall be tested by flooding the entire waterproofed area with water for a period of 24 hours. There shall be no water added after the start of the period. Measure water level at the beginning and at the end of the 24 hour period. If the water level falls, remove the water and inspect the special coating system. Leak sites shall be marked, dried, and repaired, and the test shall be repeated.

SECTION 09680 - CARPETING

Scope: 1. Broadloom and modular tile carpet:

References: 1. The publications referenced above (or below) establish minimum requirements for materials, systems and execution which may be specified in this Section.

AMERICAN ASSOCIATION OF TEXTILE CHEMISTS AND COLORISTS (AATCC)

AATCC TM 16	Test Method: Colorfastness to Light
AATCC TM 134	Test Method: Electrostatic Propensity of Carpets
AATCC TM 165	Test Method: Colorfastness to Crocking: Carpets - AATCC Crockmeter Method
AATCC 174	Antimicrobial Activity Assessment of Carpet

AMERICAN SOCIETY FOR TESTING AND MATERIALS (ASTM)

ASTM D 297	Rubber Products – Chemical Analysis
ASTM D 418	Pile Yarn Floor Covering Construction
ASTM D 1667	Flexible Cellular Materials – Vinyl Chloride Polymers and Copolymers (Closed-Cell Foam)
ASTM D 3278	Test Methods for Flash Point of Liquids by Small Scale Closed-Cup Apparatus
ASTM D 3676	Rubber Cellular Cushion Used for Carpet or Rug Underlay
ASTM D 5252	Practice for the Operation of the Hexapod Tumble Drum Tester
ASTM D 5417	Practice for Operation of the Vettermann Drum Tester
ASTM E 648	Critical Radiant Flux of Floor-Covering Systems Using a Radiant Heat Energy Source

CARPET AND RUG INSTITUTE (CRI)

CRI 104	Commercial Carpet Installation Standard

U.S. NATIONAL ARCHIVES AND RECORDS ADMINISTRATION (NARA)

16 CFR 1630Standard for the Surface Flammability of Carpet and Rugs (FF 1-70)
40 CFR 247Comprehensive Procurement Guideline for Products Containing Recovered Materials

INTERNATIONAL ORGANIZATION FOR STANDARDIZATION (ISO)

ISO 2551	Machine-made Textile Floor Coverings – Determination of Dimensional Changes Due to the Effect of Varied Water and Heat Conditions (AACHEN Test)

Regulatory requirements: 1. Carpet and adhesives shall bear the Carpet and Rug Institute (CRI) Indoor Air Quality (IAQ) label or demonstrate compliance with testing criteria and frequencies through independent laboratory test results. Carpet type bearing the label will indicate that the carpet has been tested and meets the criteria of the CRI IAQ Carpet Testing Program, and minimizes the impact on indoor air quality. Contractor shall procure carpet in accordance with 40 CFR 247. Carpet shall conform to EPA requirements for RECYCLED / RECOVERED MATERIALS. Where possible, product shall be purchased locally to reduce emissions of fossil fuels from transporting.

Submittals:

1. Shop Drawings: Three copies of drawings indicating areas receiving carpet, carpet types, textures and patterns, direction of pile, location of seams, and locations of edge molding.

2. Product Data:
   a. Three copies of the manufacturer's catalog data and printed documentation stating physical characteristics, durability, resistance to fading, and flame resistance characteristics for each type of carpet material and installation accessory.
   b. Three copies of the manufacturer's printed installation instructions for the carpet, including preparation of substrate, seaming techniques, and recommended adhesives and tapes.
   c. Regulatory Requirements; Three copies of report stating that carpet contains recycled materials and/or involvement in a recycling or reuse program. Report shall include percentage of recycled material.

3. Samples:
   a. Carpet: Three "Production Quality" samples minimum 18 inches x 18 inches (or full carpet tile size which ever is larger) of each carpet proposed for use, showing quality, pattern, and color specified. If carpet pattern is extended across multiple carpet tiles, three “sets of carpet tile shall be provided with the “set” of carpet tiles equal to the numbers of full size carpet tiles needed to fully show the carpet pattern.
   b. Rubber, Vinyl or Aluminum Moldings: Three pieces of each type proposed for use, showing quality, pattern, and color specified, at least 12 inches long.
   c. Special Treatment Materials: Three samples of each type proposed for use, showing quality, pattern, and color specified, at least 12 inches long showing system and installation method.

4. Test Reports: Moisture and Alkalinity Tests; Three copies of test reports of moisture and alkalinity content of concrete slab stating date of test, person conducting the test, and the area tested.

5. Certificates:
   a. Certificates of compliance from a laboratory accredited by the National Laboratory Accreditation

Program of the National Institute of Standards and Technology attesting that each type of carpet and carpet with cushion material conforms to the standards specified.

b. Regulatory Requirements; Report stating that the carpet contains recycled materials and indicating the actual percentage of recycled material.

6. Operation and Maintenance Data: Operations and Maintenance Manuals will be submitted in accordance with the requirements of specification Section 01800 Equipment Operating, Maintenance, And Repair Manuals. Three copies of carpet manufacturer's maintenance instructions describing recommended type of cleaning equipment and material, spotting and cleaning methods, and cleaning cycles

Warranty: 1. Manufacturer's standard performance guarantees or warranties including minimum ten (10) year wear warranty, two (2) year material and workmanship and ten (10) year tuft bind and delamination.

Extra Material: 1. Extra material from same dye lot consisting of full width continuous broadloom or full size carpet tiles shall be provided for future maintenance. A minimum of 5 percent of total square feet of each carpet type, pattern, and color and 20 lineal feet of base shall be provided.

Products: 1. Carpet Type: Carpet shall be first quality; free of visual blemishes, streaks, poorly dyed areas, fuzzing of pile yarn, spots or stains, and other physical and manufacturing defects. Carpet materials and treatments shall be reasonably nonallergenic and free of other recognized health hazards. All grade carpets shall have a static control construction which gives adequate durability and performance.

2. Physical Characteristics
   a. Carpet Construction: Tufted
   b. Type: Carpet Tile (preferred) or Broadloom
   c. Pile Type: Level-loop or Multilevel Texture loop
   d. Pile Fiber: Commercial 100% branded (federally registered trademark) Type 6.6 Nylon.
   e. Pile or Wire Height: Minimum .118 inches in accordance with ASTM D 418
   f. Gauge or Pitch: Minimum 1/10 per inch in accordance with ASTM D 418
   g. Stitches or Rows/Wires: Minimum 8.4 per sq. in.
   h. Finished Pile Yarn Weight: Minimum 28 ounces per square yard. This does not include weight of backings. Weight shall be determined in accordance with ASTM D 418.
   i. Pile Density: Minimum 6000
   j. Dye Method: Solution dyed
   k. Backing Materials: Primary backing materials shall be those customarily used and accepted by the trade for each type of carpet. Secondary backing to suit project requirements shall be those customarily used and accepted by the trade for each type of carpet, except when a special unitary back designed for gluedown is provided.

3. Adhesives And Concrete Primer: Adhesives and concrete primers for installation of carpet shall be waterproof, nonflammable, meet local air-quality standards, and shall be as required by the carpet manufacturer. Seam adhesive shall be waterproof, nonflammable, and nonstaining as recommended by the carpet manufacturer. Release adhesive for modular tile carpet shall be as recommended by the carpet manufacturer. Adhesives flashpoint shall be minimum 140 degrees F in accordance with ASTM D 3278.

4. Carpet or Rubber Base: Carpet Wall Base shall be 4 in high, surged edge, cut from roll stock. Color: To match carpet. or Rubber Base per Section 09650 – Resilient Flooring. Color as indicated.

5. Molding/Transition Strip: Molding and transition strips for the type of carpet being installed shall be provided. Molding and transition strips shall be heavy-duty rubber or homogeneous composition of polyvinyl chloride (PVC), high quality additives, and colorants. Floor flange shall be a minimum 2 inch wide. Transition strips shall be tapered to meet abutting materials. Color shall be to match carpet.

6. Tape: Tape for seams shall be as recommended by the carpet manufacturer for the type of seam used in installation.

7. Color, Texture and Pattern: Color, textures, and patterns shall be as selected by the Architect and approved by the Government.

Performance Requirements:

1. ARR (Appearance Retention Rating): Carpet shall be tested and have the minimum 3.0-3.5 (Heavy) ARR when tested in accordance with either the ASTM D 5252 (Hexapod) or ASTM D 5417 (Vettermann) test methods using the number of cycles for short and long term tests as specified.

2. Static Control: Static control shall be provided to permanently control static buildup to less than 3.5 kV when tested at 20 percent relative humidity and 70 degrees F in accordance with AATCC TM 134.

3. Flammability and Critical Radiant Flux Requirements: Carpet shall comply with 16 CFR 1630. Carpet in corridors and exits shall have a minimum average critical radiant flux of 0.45 watts per square centimeter when tested in accordance with ASTM E 648

4. Tuft Bind: Tuft bind force required to pull a tuft or loop free from carpet backing shall be a minimum 10 pound average force for loop pile .

5. Colorfastness to Crocking: Dry and wet crocking shall comply with AATCC TM 165 and shall have a Class 4 minimum rating on the AATCC Color Transference Chart for all colors.

6. Colorfastness to Light: Colorfastness to light shall comply with AATCC TM 16, Test Option E "Water-Cooled Xenon-Arc Lamp, Continuous Light" and shall have a minimum 4 grey scale rating after 40 hours.

7. Delamination Strength: Delamination strength for tufted carpet with a secondary back shall be minimum of 2.5 lbs./inch

8. Moisture And Alkalinity Tests: Concrete slab shall be tested for moisture content and excessive alkalinity in accordance with CRI 104.

SECTION 09900 – PAINTS AND COATINGS

Scope:

1. Provide painting and surface preparation for all unfinished interior and exterior surfaces, including electrical and mechanical equipment.

References:

1. The publications referenced above (or below) establish minimum requirements for materials, systems and execution which may be specified in this Section.

AMERICAN CONFERENCE OF GOVERNMENTAL INDUSTRIAL HYGIENISTS (ACGIH)

ACGIH TLV-BKLT	Threshold Limit Values (TLVs) for Chemical Substances and Physical Agents and Biological Exposure Indices (BEIs)
ACGIH TLV-DOC	Documentation of Threshold Limit Values and Biological Exposure Indices

AMERICAN SOCIETY FOR TESTING AND MATERIALS (ASTM)

ASTM D 235	Standard Specification for Mineral Spirits (Petroleum Spirits) (Hydrocarbon Dry Cleaning Solvent)
ASTM D 523	Standard Test Method for Specular Gloss
ASTM D 2092	Preparation of Zinc-Coated (Galvanized) Steel Surfaces for Painting
ASTM D 4263	Indicating Moisture in Concrete by the Plastic Sheet Method
ASTM D 4444	Standard Test Methods for Use and Calibration of Hand-Held Moisture Meters
ASTM F 1869	Measuring Moisture Vapor Emission Rate of Concrete Subfloor Using Anhydrous Calcium Chloride

CODE OF FEDERAL REGULATIONS (CFR)

29 CFR 1910.1000	Air Contaminants

MASTER PAINTERS INSTITUTE (MPI)

MPI 2	Aluminum Heat Resistant Enamel (up to 427 C and 800 F)
MPI 4	Interior/Exterior Latex Block Filler
MPI 19	Inorganic Zinc Primer
MPI 21	Heat Resistant Enamel, Gloss, (Up to 205 C or 400 F)
MPI 23	Surface Tolerant Metal Primer
MPI 27	Exterior / Interior Alkyd Floor Enamel, Gloss
MPI 39	Interior Latex-based Wood Primer
MPI 45	Interior Primer Sealer
MPI 47	Interior Alkyd, Semi-Gloss
MPI 50	Interior Latex Primer Sealer
MPI 51	Interior Alkyd, Eggshell
MPI 52	Interior Latex, Gloss Level 3
MPI 57	Interior Oil Modified Clear Urethane, Satin
MPI 77	Epoxy Cold Cured, Gloss
MPI 79	Marine Alkyd Metal Primer
MPI 90	Interior Wood Stain, Semi-Transparent
MPI 94	Exterior Alkyd, Semi-Gloss
MPI 95	Fast Drying Metal Primer
MPI 101	Cold Curing Epoxy Primer
MPI 107	Rust Inhibitive Primer (Water-Based)
MPI 108	High Build Epoxy Marine Coating
MPI 110	Interior/Exterior High Performance Acrylic
MPI 116	Epoxy Block Filler
MPI 134	Waterborne Galvanized Primer
MPI 141	High Performance Semigloss Latex, White and Tints - Gloss Level 5
MPI 145	Institutional Low Odor / VOC Interior Latex, Gloss Level 3
MPI 147	Institutional Low Odor / VOC Interior Latex, Gloss Level 5

MILITARY STANDARDS (MIL-STD)

MIL-STD-101	Color Code for Pipelines and for Compressed Gas Cylinders

SCIENTIFIC CERTIFICATION SYSTEMS (SCS)

SCS-EPP-SP01-01	Environmentally Preferable Product Specification for Architectural and Anti-Corrosive Paints

STEEL STRUCTURES PAINTING COUNCIL (SSPC)

SSPC PA 1	Shop, Field, and Maintenance Painting
SSPC PA 3	Safety in Paint Application
SSPC VIS 1	Visual Standard for Abrasive Blast Cleaned Steel (Standard Reference Photographs)
SSPC VIS 3	Visual Standard for Power- and Hand-Tool Cleaned Steel (Standard Reference Photographs)
SSPC VIS 4	Guide and Reference Photographs for Steel Surfaces Prepared by Waterjetting
SSPC SP 1	Solvent Cleaning
SSPC SP 2	Hand Tool Cleaning
SSPC SP 3	Power Tool Cleaning
SSPC SP 6	Commercial Blast Cleaning
SSPC SP 7	Brush-Off Blast Cleaning
SSPC SP 10	Near-White Blast Cleaning
SSPC SP 12	Surface Preparation and Cleaning of Steel and Other Hard Materials by High-and Ultra High-Pressure Water Jetting Prior to Recoating

Submittals:

1. In keeping with the intent of Executive Order 13101, "Greening the Government through Waste Prevention, Recycling, and Federal Acquisition", products certified by SCS as meeting SCS-EPP-SP01-01 shall be given preferential consideration over registered products. Products that are registered shall be given preferential consideration over products not carrying any EPP designation.

2. Shop Drawings: Piping identification, Submit color stencil codes.

3. Product Data: Manufacturer's Technical Data Sheets.

4. Samples: Submit manufacturer's samples of paint colors. Cross reference color samples to color scheme as selected by the Architect and approved by the Government

5. Certificates: Applicator's qualifications, Qualification Testing laboratory for coatings.

6. Manufacturer's Instructions:
   a. Detailed mixing instructions, minimum and maximum application temperature and humidity, potlife, and curing and drying times between coats.
   b. Manufacturer's Material Safety Data Sheets; Submit manufacturer's Material Safety Data Sheets for coatings, solvents, and other potentially hazardous materials.

7. Operation and Maintenance Data: Preprinted cleaning and maintenance instructions for all coating systems shall be provided

Applicator's Qualifications:

1. Submit the name, address, telephone number, FAX number, and e-mail address of the contractor that will be performing all surface preparation and coating application. Submit evidence that key personnel have successfully performed surface preparation and application of coatings on a minimum of three similar projects within the past three years. List information by individual and include the following:
   a. Name of individual and proposed position for this work.

b. Information about each previous assignment including:
   1) Position or responsibility
   2) Employer (if other than the Contractor)
   3) Name of facility owner
   4) Mailing address, telephone number, and telex number (if non-US) of facility owner
   5) Name of individual in facility owner's organization who can be contacted as a reference
   6) Location, size and description of structure
   7) Dates work was carried out
   8) Description of work carried out on structure

Quality Assurance:

1. Field Samples and Tests: The Contracting Officer may choose up to two coatings that have been delivered to the site to be tested at no cost to the Government. Take samples of each chosen product as specified in the paragraph "Sampling Procedures." Test each chosen product as specified in the paragraph "Testing Procedure." Products which do not conform, shall be removed from the job site and replaced with new products that conform to the referenced specification. Testing of replacement products that failed initial testing shall be at no cost to the Government.
   a. Sampling Procedure: The Contracting Officer will select paint at random from the products that have been delivered to the job site for sample testing. The Contractor shall provide one liter samples of the selected paint materials. The samples shall be taken in the presence of the Contracting Officer, and labeled, identifying each sample. Provide labels in accordance with the paragraph "Packaging, Labeling, and Storage" of this specification.
   b. Testing Procedure: Provide Batch Quality Conformance Testing for specified products, as defined by and performed by MPI. As an alternative to Batch Quality Conformance testing, the Contractor may provide Qualification Testing for specified products above to the appropriate MPI product specification, using the third-party laboratory approved under the paragraph "Qualification Testing" laboratory for coatings. The qualification testing lab report shall include the backup data and summary of the test results. The summary shall list all of the reference specification requirements and the result of each test. The summary shall clearly indicate whether the tested paint meets each test requirement. Note that Qualification Testing may take 4 to 6 weeks to perform, due to the extent of testing required.
      1) Submit name, address, telephone number, FAX number, and e-mail address of the independent third party laboratory selected to perform testing of coating samples for compliance with specification requirements. Submit documentation that laboratory is regularly engaged in testing of paint samples for conformance with specifications, and that employees performing testing are qualified. If the Contractor chooses MPI to perform the Batch Quality Conformance testing, the above submittal information is not required, only a letter is required from the Contractor stating that MPI will perform the testing.

Regulatory Requirements:

1. Environmental Protection: In addition to requirements specified elsewhere for environmental protection, provide coating materials that conform to the restrictions of the local Air Pollution Control District and regional jurisdiction. Notify Contracting Officer of any paint specified herein which fails to conform.

2. Lead Content: Do not use coatings having a lead content over 0.06 percent by weight of nonvolatile content.

3. Chromate Content: Do not use coatings containing zinc-chromate or strontium-chromate.

4. Asbestos Content: Materials shall not contain asbestos.

5. Mercury Content: Materials shall not contain mercury or mercury compounds.

6. Silica: Abrasive blast media shall not contain free crystilline silica.

7. Human Carcinogens: Materials shall not contain ACGIH TLV-BKLT and ACGIH TLV-DOC confirmed human carcinogens (A1) or suspected human carcinogens (A2).

Safety And Health:

1. Apply coating materials using safety methods and equipment in accordance with the following:
   a. Work shall comply with applicable Federal, State, and local laws and regulations, and with the ACCIDENT PREVENTION PLAN, including the Activity Hazard Analysis. The Activity Hazard Analysis shall include analyses of the potential impact of painting operations on painting personnel and on others involved in and adjacent to the work zone.
   b. Safety Methods Used During Coating Application: Comply with the requirements of SSPC PA 3.
   c. Toxic Materials: To protect personnel from overexposure to toxic materials, conform to the most stringent guidance of:
      1) The applicable manufacturer's Material Safety Data Sheets (MSDS) or local regulation.
      2) 29 CFR 1910.1000.
      3) ACGIH TLV-BKLT, threshold limit values.

Color Selection:

1. Colors of finish coats shall be as indicated or specified. Where not indicated or specified, colors shall be selected by the Contracting Officer. Manufacturers' names and color identification are used for the purpose of color identification only. Named products are acceptable for use only if they conform to specified requirements. Products of other manufacturers are acceptable if the colors approximate colors indicated and the product conforms to specified requirements.

2. Tint each coat progressively darker to enable confirmation of the number of coats.

3. Color, texture, and pattern of wall coating systems shall be as indicated on the drawings.

Location And Surface Type To Be Painted:

1. Painting Included: Where a space or surface is indicated to be painted, include the following unless indicated otherwise.
   a. Surfaces behind portable objects and surface mounted articles readily detachable by removal of fasteners, such as screws and bolts.
   b. New factory finished surfaces that require identification or color coding and factory finished surfaces that are damaged during performance of the work.
   c. Existing coated surfaces that are damaged during performance of the work.

2. Exterior Painting: Includes new surfaces of the buildings and appurtenances as indicated. Also included are existing coated surfaces made bare by cleaning operations.

3. Interior Painting: Includes new surfaces of the buildings and appurtenances as indicated and existing coated surfaces made bare by cleaning operations. Where a space or surface is indicated to be painted, include the following items, unless indicated otherwise.
   a. Exposed columns, girders, beams, joists, and metal deck; and
   b. Other contiguous surfaces.

4. Painting Excluded: Do not paint the following unless indicated otherwise.
   a. Surfaces concealed and made inaccessible by panelboards, fixed ductwork, machinery, and equipment fixed in place.
   b. Surfaces in concealed spaces. Concealed spaces are defined as enclosed spaces above suspended ceilings, furred spaces, attic spaces, crawl spaces, elevator shafts and chases.
   c. Steel to be embedded in concrete.
   d. Copper, stainless steel, aluminum, brass, and lead except existing coated surfaces.

e. Hardware, fittings, and other factory finished items.

5. Mechanical and Electrical Painting: Includes field coating of interior and exterior new surfaces.
   a. Where a space or surface is indicated to be painted, include the following items unless indicated otherwise.
      1) Exposed piping, conduit, and ductwork
      2) Supports, hangers, air grilles, and registers;
      3) Miscellaneous metalwork and insulation coverings.
   b. Do not paint the following, unless indicated otherwise:
      1) New zinc-coated, aluminum, and copper surfaces under insulation
      2) New aluminum jacket on piping
      3) New interior ferrous piping under insulation.

Definitions and Abbreviations: 1. MPI Gloss Levels: MPI system of defining gloss. Seven (7) gloss levels (G1 to G7) are generically defined under the Evaluation sections of the MPI Manuals. Traditionally, Flat refers to G1/G2, Eggshell refers to G3, Semigloss refers to G5, and Gloss refers to G6.

2. Gloss levels are defined by MPI as follows:

Gloss Level	Description	Units @ 60 degrees	Units @ 85 degrees
G1	Matte or Flat	0 to 5	10 max
G2	Velvet	0 to 10	10 to 35
G3	Eggshell	10 to 25	10 to 35
G4	Satin	20 to 35	35 min
G5	Semi-Gloss	35 to 70	
G6	Gloss	70 to 85	
G7	High Gloss		

Gloss is tested in accordance with ASTM D 523. Historically, the Government has used Flat (G1 / G2), Eggshell (G3), Semi-Gloss (G5), and Gloss (G6).

3. MPI System Number: The MPI coating system number in each Division found in either the MPI Architectural Painting Specification Manual or the Maintenance Repainting Manual and defined as an exterior (EXT/REX) or interior system (INT/RIN). The Division number follows the CSI Master Format.

Products: 1. In keeping with the intent of Executive Order 13101, "Greening the Government through Waste Prevention, Recycling, and Federal Acquisition", products certified by SCS as meeting SCS-EPP-SP01-01 shall be given preferential consideration over registered products. Products that are registered shall be given preferential consideration over products not carrying any EPP designation.

Preparation: 1. Existing and New Ferrous Surfaces:
   a. Ferrous Surfaces including Shop-coated Surfaces and Small Areas That Contain Rust, Mill Scale and Other Foreign Substances: Solvent clean or detergent wash in accordance with SSPC SP 1 to remove oil and grease. Where shop coat is missing or damaged, clean according to SSPC SP 2, SSPC SP 3, SSPC SP 6, or SSPC SP 10. Water jetting to SSPC SP 12 WJ-4 may be used to remove loose coating and other loose materials. Use inhibitor as recommended by coating manufacturer to prevent premature rusting. Shop-coated ferrous surfaces shall be protected from corrosion by treating and touching up corroded areas immediately upon detection.
   b. Surfaces With More Than 20 Percent Rust, Mill Scale, and Other Foreign Substances: Clean entire

surface in accordance with SSPC SP 6/SSPC SP 12 WJ-3.

2. Final Ferrous Surface Condition:
   a. For tool cleaned surfaces, the requirements are stated in SSPC SP 2 and SSPC SP 3. As a visual reference, cleaned surfaces shall be similar to photographs in SSPC VIS 3.
   b. For abrasive blast cleaned surfaces, the requirements are stated in SSPC SP 7, SSPC SP 6, and SSPC SP 10. As a visual reference, cleaned surfaces shall be similar to photographs in SSPC VIS 1.
   c. For water jet cleaned surfaces, the requirements are stated in SSPC SP 12. As a visual reference, cleaned surfaces shall be similar to photographs in SSPC VIS 4.

3. Galvanized Surfaces: New or Existing Galvanized Surfaces With Only Dirt and Zinc Oxidation Products: Clean with solvent, steam, or non-alkaline detergent solution in accordance with SSPC SP 1. If the galvanized metal has been passivated or stabilized, the coating shall be completely removed by brush-off abrasive blast. New galvanized steel to be coated shall not be "passivated" or "stabilized" If the absence of hexavalent stain inhibitors is not documented, test as described in ASTM D 2092, Appendix X2, and remove by one of the methods described therein.

3. Non-Ferrous Metallic Surfaces: Aluminum and aluminum-alloy, lead, copper, and other nonferrous metal surfaces.
   a. Surface Cleaning: Solvent clean in accordance with SSPC SP 1 and wash with mild non-alkaline detergent to remove dirt and water soluble contaminants.

4. Terne-Coated Metal Surfaces: Solvent clean surfaces with mineral spirits, ASTM D 235. Wipe dry with clean, dry cloths.

5. Concrete and Masonry:
   a. Curing: Concrete, stucco and masonry surfaces shall be allowed to cure at least 30 days before painting, except concrete slab on grade, which shall be allowed to cure 90 days before painting.
   b. Surface Cleaning: Remove the following: Dirt, Grease, and Oil, Fungus and Mold, Paint and Loose Particles, and Efflorescence.
   c. Allowable Moisture Content: Latex coatings may be applied to damp surfaces, but not to surfaces with droplets of water. Do not apply epoxies to damp vertical surfaces as determined by ASTM D 4263 or horizontal surfaces that exceed 3 lbs of moisture per 1000 square feet in 24 hours as determined by ASTM F 1869. In all cases follow manufacturers recommendations. Allow surfaces to cure a minimum of 30 days before painting.

6. Gypsum Board, Plaster, and Stucco: Allowable Moisture Content: Latex coatings may be applied to damp surfaces, but not surfaces with droplets of water. Do not apply epoxies to damp surfaces as determined by ASTM D 4263. New plaster to be coated shall have a maximum moisture content of 8 percent, when measured in accordance with ASTM D 4444, Method A, unless otherwise authorized. In addition to moisture content requirements, allow new plaster to age a minimum of 30 days before preparation for painting.

7. New Plywood and Wood Surfaces, Except Floors: Moisture content of the wood shall not exceed 12 percent as measured by a moisture meter in accordance with ASTM D 4444, Method A, unless otherwise authorized.

Application: 1. Coating Application: Painting practices shall comply with applicable federal, state and local laws enacted to insure compliance with Federal Clean Air Standards. Apply coating materials in accordance with SSPC PA 1. SSPC PA 1 methods are applicable to all substrates, except as modified herein.

Piping Identification: 1. Piping Identification, Including Surfaces In Concealed Spaces: Stencil approved names or code letters, in letters a minimum of 1/2 inch high for piping and a minimum of 2 inch high elsewhere.

Paint Table: 1. Exterior Paint Tables

Division 5: Exterior Metal, Ferrous And Non-Ferrous Paint Table

Steel / Ferrous Surfaces

A. New Steel that has been hand or power tool cleaned to SSPC SP 2 or SSPC SP 3

1. Alkyd
New; MPI EXT 5.1Q-G5 (Semigloss)/ Existing; MPI REX 5.1D-G5

Primer:	Intermediate:	Topcoat:
MPI 23	MPI 94	MPI 94

System DFT: 131 microns

B. New Steel that has been blast-cleaned to SSPC SP 6:

2. Alkyd
New; MPI EXT 5.1D-G5 (Semigloss) / Existing; MPI REX 5.1D-G5

Primer:	Intermediate:	Topcoat:
MPI 79	MPI 94	MPI 94

System DFT: 131 microns

C. New steel blast cleaned to SSPC SP 10:

1. Waterborne Light Industrial
MPI EXT 5.1R-G5 (Semigloss)

Primer:	Intermediate:	Topcoat:
MPI 101	MPI 108	MPI 110-G5

System DFT: 212 microns

D. Metal floors (non-shop-primed surfaces or non-slip deck surfaces) with non-skid additive (NSA), load at manufacturer's recommendations.:

1. Alkyd Floor Enamel
MPI EXT 5.1S-G6 (Gloss)

Primer:	Intermediate:	Topcoat:
MPI 79	MPI 27	MPI 27 (+NSA)

System DFT:

Exterior Galvanized Surfaces

E. New Galvanized surfaces:

1. Waterborne Primer / Waterborne Light Industrial Coating
MPI EXT 5.3J-G5 (Semigloss)

Primer:	Intermediate:	Topcoat:
MPI 134	MPI 110-G5	MPI 110-G5

System DFT: 112 microns

F. Galvanized surfaces with slight coating deterioration; little or no rusting:

1. Waterborne Light Industrial Coating
MPI REX 5.3J-G5 (Semigloss)

Primer:	Intermediate:	Topcoat:
MPI 134	N/A	MPI 110-G5

System DFT: 112 microns

G. Galvanized surfaces with severely deteriorated coating or rusting:

1. Waterborne Light Industrial Coating
MPI REX 5.3L-G5(Semigloss)

Primer:	Intermediate:	Topcoat:
MPI 101	MPI 108	MPI 110-G5

System DFT: 212 microns

Exterior Surfaces, Other Metals (Non-Ferrous)

H. Aluminum, aluminum alloy and other miscellaneous non-ferrous metal items not otherwise specified except hot metal surfaces, roof surfaces, and new prefinished equipment. Match surrounding finish:

1. Alkyd
MPI EXT 5.4F-G5 (Semigloss)

Primer:	Intermediate:	Topcoat:
MPI 95	MPI 94	MPI 94

System DFT: 125 microns

I. Surfaces adjacent to painted surfaces; Mechanical, Electrical, and miscellaneous metal items not otherwise specified except floors, hot metal surfaces, and new prefinished equipment. Match surrounding finish:

1. Alkyd
MPI EXT 5.1D-G5 (Semigloss)

Primer:	Intermediate:	Topcoat:
MPI 79	MPI 94	MPI 94

System DFT: 131 microns

J. Hot metal surfaces subject to temperatures up to 205 degrees C (400 degrees F):

1. Heat Resistant Enamel
MPI EXT 5.2A

Primer:	Intermediate:	Topcoat:
MPI 21	Surface preparation and number of coats per manufacturer's instructions.	

System DFT: Per Manufacturer

K. Ferrous metal subject to high temperature, up to 400 degrees C (750 degrees F):

1. Inorganic Zinc Rich Coating
MPI EXT 5.2C

Primer:	Intermediate:	Topcoat:
MPI 19	Surface preparation and number of coats per manufacturer's instructions.	

System DFT: Per Manufacturer

2. Heat Resistant Aluminum Enamel
MPI EXT 5.2B (Aluminum Finish)
Primer: Intermediate: Topcoat:
MPI 2 Surface preparation and number of coats per manufacturer's instructions.
System DFT: Per Manufacturer

2. Interior Paint Tables

Division 3: Interior Concrete Paint Table

A. New and uncoated concrete floors as scheduled on the drawings and recess area at floor mat:

1. Epoxy
New; MPI INT 3.2C-G6 (Gloss) / Existing; MPI RIN 3.2C-G6 (Gloss)
Primer: Intermediate: Topcoat:
MPI 77 MPI 77 MPI 77
System DFT: 125 microns

Note: Primer may be reduced for penetration per manufacturer's instructions.

Division 4: Interior Concrete Masonry Units Paint Table

A. New Concrete masonry:

1. High Performance Architectural Latex
MPI INT 4.2D-G5 (Semigloss)
Filler Primer: Intermediate: Topcoat:
MPI 4 N/A MPI 141 MPI 141
System DFT: 275 microns

Fill all holes in masonry surface

2. Institutional Low Odor / Low VOC Latex
New; MPI INT 4.2E-G5 (Semigloss)
Filler Primer: Intermediate: Topcoat:
MPI 4 N/A MPI 147 MPI 147
System DFT: 100 microns

B. New Concrete masonry units in areas requiring a high degree of sanitation or high humidity areas unless otherwise specified:

1. Waterborne Light Industrial Coating
MPI INT 4.2K-G5(Semigloss)
Filler: Primer: Intermediate: Topcoat:
MPI 4 N/A MPI 110-G5 MPI 110-G5
System DFT: 275 microns
Fill all holes in masonry surface

2. Epoxy
MPI INT 4.2G-G6 (Gloss)

Filler:	Primer:	Intermediate:	Topcoat:
MPI 116	N/A	MPI 77	MPI 77

System DFT: 250 microns
Fill all holes in masonry surface

Division 5: Interior Metal, Ferrous And Non-Ferrous Paint Table

Interior Steel / Ferrous Surfaces

A. Metal, Mechanical, and Electrical. Surfaces adjacent to painted surfaces (Match surrounding finish),and miscellaneous metal items not otherwise specified except floors, hot metal surfaces, and new prefinished equipment:

1. Alkyd
MPI INT 5.1E-G3 (Eggshell)

Primer:	Intermediate:	Topcoat:
MPI 79	MPI 51	MPI 51

System DFT:

Division 6: Interior Wood Paint Table

A. New Wood and plywood not otherwise specified:

1. Alkyd
MPI INT 6.4B-G5 (Semigloss)

Primer:	Intermediate:	Topcoat:
MPI 45	MPI 47	MPI 47

System DFT: 112 microns

2. Institutional Low Odor / Low VOC Latex
New; MPI INT 6.3V-G5 (Semigloss)

Primer:	Intermediate:	Topcoat:
MPI 39	MPI 147	MPI 147

System DFT: 100 microns

B. New Wood and Plywood, except floors; natural finish or stained:

1. Natural finish, oil-modified polyurethane
New; MPI INT 6.4J-G4 / Existing; MPI RIN 6.4L-G4

Primer:	Intermediate:	Topcoat:
MPI 57	MPI 57	MPI 57

System DFT: 100 microns

2. Stained, oil-modified polyurethane
New; MPI INT 6.4E-G4 / Existing; MPI RIN 6.4G-G4

Stain:	Primer:	Intermediate:	Topcoat:
MPI 90	MPI 57	MPI 57	MPI 57

System DFT: 100 microns

C. New Wood Doors; Natural Finish or Stained:

1. Natural finish, oil-modified polyurethane

New; MPI INT 6.3K-G4 / Existing; MPI RIN 6.3K-G4
Primer: Intermediate: Topcoat:
MPI 57 MPI 57 MPI 57
System DFT: 100 microns

Note: Sand between all coats per manufacturers recommendations.

2. Stained, oil-modified polyurethane
New; MPI INT 6.3E-G4 / Existing; MPI RIN 6.3E-G4
Stain: Primer: Intermediate: Topcoat:
MPI 90 MPI 57 MPI 57 MPI 57
System DFT: 100 microns

Note: Sand between all coats per manufacturers recommendations.

D. New Wood Doors; Pigmented finish:

1. Alkyd
New; MPI INT 6.3B-G5 (Semigloss)
Primer: Intermediate: Topcoat:
MPI 45 MPI 47 MPI 47
System DFT: 112 microns

Note: Sand between all coats per manufacturers recommendations.

Division 9: Interior Plaster, Gypsum Board, Textured Surfaces Paint Table

A. New Wallboard not otherwise specified:

1. Latex
New; MPI INT 9.2A-G3 (Eggshell) / Existing; RIN 9.2A-G3 (Eggshell)
Primer: Intermediate: Topcoat:
MPI 50 MPI 52 MPI 52
System DFT: 100 microns

2. Institutional Low Odor / Low VOC Latex
New; MPI INT 9.2M-G3 (Eggshell) / Existing; MPI RIN 9.2M-G3 (Eggshell)
Primer: Intermediate: Topcoat:
MPI 50 MPI 145 MPI 145
System DFT: 100 microns

B. New Wallboard in toilets, food-preparation, restrooms, laundry areas, shower areas, areas requiring a high degree of sanitation, and other high humidity areas not otherwise specified.:

1. Epoxy
New; MPI INT 9.2E-G6 (Gloss) / Existing; MPI RIN 9.2D-G6 (Gloss)
Primer: Intermediate: Topcoat:
MPI 50 MPI 77 MPI 77
System DFT: 100 microns

DIVISION 10 - SPECIALTIES

SECTION 10100 - VISUAL COMMUNICATION SPECIALTIES

Scope: 1. Provide Markerboards, bulletin boards, maprails and tackboards.

References: 1. The publications referenced above (or below) establish minimum requirements for materials, systems and execution which may be specified in this Section.

AMERICAN NATIONAL STANDARDS INSTITUTE (ANSI)

ANSI Z97.1 Performance Specifications and Methods of Testing for Safety Glazing Materials Used In Buildings

AMERICAN SOCIETY FOR TESTING AND MATERIALS (ASTM)

ASTM B 221M Aluminum and Aluminum-Alloy Extruded Bars, Rods, Wire, Profiles, and Tubes (Metric)
ASTM C 1048 Heat-Treated Flat Glass - Kind HS, Kind FT Coated and Uncoated Glass
ASTM F 152 Tension Testing of Nonmetallic Gasket Materials

Submittals: 1. Product Data: Manufacturer's descriptive data and catalog cuts. Manufacturer's installation instructions, and cleaning and maintenance instructions.

2. Samples:
   a. Aluminum: Sections of frame, map rail, and chalktray, two map hooks and two map rail end stops. Frame samples for markerboards, bulletin boards, and tackboards shall be “corner” samples with each side a minimum of 6 inches long. Map rail and chalktray shall be a minimum 6 inches long.
   b. Markerboards: Section showing porcelain enamel coating, steel, core material and backing. Samples shall be a minimum 6 inches long.
   c. Bulletin boards, and Tackboards: Section of core material showing the lamination of cork. Sample of hardwood and plastic laminate finish, and glass type. Samples shall be minimum 6 inch x 6 inch and show range of color and pattern.

3. Certificates: Certificate of compliance signed by Contractor attesting that visual display boards conform to the requirements specified.

Warranty: 1. Manufacturer's standard performance guarantees or warranties that extend beyond a one year period shall be provided.

Products: 1. Porcelain-on-metal chalkboards: Enameling grade sheet steel with porcelain finish with gloss finish for use with liquid chalk markers; Porcelain Enamel Marker board writing surface shall be composed of porcelain enamel fused to a nominal 28 gauge thick steel, laminated to a minimum 1/4 inch thick core material with a steel or foil backing sheet. Writing surface shall be capable of supporting paper by means of magnets. Marker board surface for display track system may be a powder paint dry erase surface adhered to a nominal 18 gauge thick steel.

2. Cork: Cork shall be a continuous resilient sheet made from soft, clean, granulated cork relatively free from hardback and dust and bonded with a binder suitable for the purpose intended. The wearing surface shall be free from streaks, spots, cracks or other imperfections that would impair its usefulness or appearance. The material shall be seasoned, and a clean cut made not less than ½ inch from the edge shall show no evidence of soft sticky binder. Natural Cork; Material shall be a single layer of pure grain natural cork without backing or facing. The cork sheet shall have a tensile strength of not less than 40 psi when tested in

accordance with ASTM F 152.

3. Aluminum: Aluminum frame extrusions shall be alloy 6063-T5 or 6063-T6, conform to ASTM B 221 , and be a minimum 0.06 inches thick. Exposed aluminum shall have an anodized, satin finish. Straight, single lengths shall be used wherever possible. Joints shall be kept to a minimum. Corners shall be mitered and shall have a hairline closure.

4. Glass: Glass shall be comprised of tempered glass in accordance with ANSI Z97.1 and shall conform to ASTM C 1048, Kind FT (fully tempered), Condition A (uncoated), Type I, Class I (clear), thickness as specified.

5. Markerboard: Markerboard shall have a porcelain enamel writing surface and a chalktray. Markerboard shall be a factory assembled unit complete in one piece, without joints whenever possible. When markerboard dimensions require delivery in separate sections, components shall be prefit at the factory, disassembled for delivery and jointed at the site. Frame shall be aluminum. Chalktray shall be the same material as the frame and extend the full length of the liquid markerboard. The markerboard shall have a heavy duty map rail with map hooks and clips for holding sheets of paper, end stops, and a tackable insert as specified below and shall extend the full length of the liquid chalkboard. Dry erase markings shall be removable with a felt eraser or dry cloth without ghosting. Each unit shall come complete with an eraser and four different color compatible dry erase markers. The size finish and color shall be as selected by the Architect and approved by the Government.

6. Continuous Map Rail: Heavy duty aluminum frame continuos Map Rail shall be 2 inch wide and have a tackable insert and shall extend the full length of the rail, and shall have map hooks with clips for holding sheets of paper and end stops. One map hook shall be provided for each 12 inches of map rail. The size shall be as indicated.

6. Tackboards: Tackboards shall consist of a minimum 1/4 inch thick natural cork laminated to a minimum 1/4-inch thick hardboard, and shall have an aluminum frame. The size shall be as indicated.

7. Bulletin Boards: Bulletin boards shall have a hardwood or aluminum frame, 1/4 inch thick plywood or hardboard back; and a 1/4 inch thick, dense, smooth faced corkboard face securely cemented to the back and 1/4 inch tempered glass sliding doors. Glass shall be as specified above.

SECTION 10106 – RECESSED DISPLAY CASE

Scope: 1. Provide recessed display case.

Submittals: 1. Product Data: Provide product literature on recessed display cases.

2. Shop Drawings: Indicate wall elevations, dimensions, and joint locations.

3. Samples:

Warranty: 1. Include coverage of fabric surface from discoloration due to fading.

Product: 1. Recessed case: Recessed case with aluminum front with satin anodized finish and a cork back panel. Both units shall have ¼ inch tempered glass sliding doors with finger pulls, locks and keys, shelf brackets, shelf standard and three 12 inch wide adjustable ¼ inch tempered glass shelves.

2 Required items:

a. Wood box of 24 inches in depth. Exposed wood shall be stained light oak.
b. Glass: All glass shall be tempered.
c. Back Panel: For polyester fabric over cork.
d. Trim: Trim shall be satin anodized aluminum.

SECTION 10170 – PLASTIC TOILET PARTITIONS

Scope: 1. Provide toilet partitions and screens; Floor-supported partitions.

2. Solid Plastic Shower compartment Benches.

References: 1. The publications referenced above (or below) establish minimum requirements for materials, systems and execution which may be specified in this Section.

COMMERCIAL ITEM DESCRIPTIONS (CID)

CID A-A-60003 Partitions, Toilet, Complete

Submittals: 1. Product Data: Manufacturer's technical data and catalog cuts including installation and cleaning instructions.

2. Shop Drawings: Drawings showing plans, elevations, details of construction, hardware, reinforcing, fittings, mountings, and anchorings.

3. Samples: Manufacturer's standard color charts and color samples.

Warranty: 1. Manufacturer's standard performance guarantees or warranties that extend beyond a 1 year period shall be provided.

Products: 1. Toilet Enclosures: Toilet enclosures shall conform to CID A-A-60003, Type I, Style A, floor supported. Width, length, and height of toilet enclosures shall be as shown. Finish surface of panels shall be solid plastic with 20 percent or more recovered plastic. Panels indicated to receive toilet paper holders or grab bars as specified in Section 10800 TOILET ACCESSORIES, shall be prepared for mounting of the items required. Grab bars shall withstand a bending stress, shear stress, shear force, and a tensile force induced by 250 lbf. Grab bars shall not rotate within their fittings. Pilaster shoes shall be as standard with the manufacturer. Doors shall be 2’-0” wide except the handicap stall shall have a 3'-0" wide door. Color shall be as selected by the Architect and approved by the Government

2. Urinal Screens: Urinal screens shall conform to CID A-A-60003, Type III, wall mounted. Finish surface of screens shall be solid plastic with 20 percent or more recovered plastic. Width and height of urinal screens shall be as shown. Color shall be as selected by the Architect and approved by the Government

3. Hardware: Hardware for the toilet partition system shall conform to CID A-A-60003 for the specified type and style of partitions. Hardware finish shall be satin stainless steel No. 4 finish and highly resistant to alkalies, urine, and other common toilet room acids. Doors shall be furnished with a stainless steel coat hook and door bumper. Doors shall have thumb turn door latch with exterior emergency access feature and door stiles with latch keeper/stop and rubber bumper. Out-swinging door shall have a door pull and shall be ADA compliant.

SECTION 10200 - LOUVERS AND VENTS

Scope: 1. Provide wall louvers and vents, screens, frames and accessories.:

References: 1. The publications referenced above (or below) establish minimum requirements for materials, systems and execution which may be specified in this Section.

AMERICAN ARCHITECTURAL MANUFACTURERS ASSOCIATION (AAMA)

AAMA 603.8	Pigmented Organic Coatings on Extruded Aluminum

AIR MOVEMENT AND CONTROL ASSOCIATION (AMCA)

AMCA 500	Louvers, Dampers and Shutters
AMCA 511	Certified Ratings Program for Air Control Devices

AMERICAN SOCIETY FOR TESTING AND MATERIALS (ASTM)

ASTM A 653/A 653M	Steel Sheet, Zinc-Coated (Galvanized) or Zinc-Iron Alloy-Coated (Galvannealed) by the Hot-Dip Process
ASTM B 209M	Aluminum and Aluminum-Alloy Sheet and Plate (Metric)
ASTM B 221M	Aluminum and Aluminum-Alloy Extruded Bars, Rods, Wire, Profiles, and Tubes (Metric)

Submittals: 1. Shop Drawings: Show all information necessary for fabrication and installation of louvers. Indicate materials, sizes, thicknesses, fastenings, and profiles.

2. Samples: Colors of finishes shall closely approximate colors indicated. Where color is not indicated, submit the manufacturer's standard colors for selection.

Products: 1. Galvanized Steel Sheet: ASTM A 653/A 653M, coating designation G90 (Z275).

2. Aluminum Sheet: ASTM B 209M, alloy 3003 or 5005 with temper as required for forming.

3. Extruded Aluminum: ASTM B 221M, alloy 6063-T5 or -T52.

4. Metal Wall Louvers:
   a. Weather resistant type, with bird screens and made to withstand a wind load of not less than 30 pounds per square foot. Wall louvers shall bear the AMCA certified ratings program seal for air performance and water penetration and wind-driven rain in accordance with AMCA 500, AMCA 500-L and AMCA 511. The rating shall show a water penetration of 0.20 or less ounce per square foot of free area at a free velocity of 800 feet per minute. The ratings for wind-driven rain shall show AMCA Certified 500L, and AMCA 511 - 99.3% Effective 29 Mph (46.4 Kph).
   b. Louver frame shall be channel shaped with welded corner joints and a frame depth as selected.
   c. Louver blade design shall be sloped at 45 degrees, reinforced with intermediate stiffeners, and integral and lateral rain water stops positioned on blade.
   d. Louver frame shall be channel shaped with welded corner joints and a frame depth of 150 mm as indicated.
   e. Louver blade design shall be sloped at 45 degrees, reinforced with intermediate stiffeners, and integral and lateral rain water stops positioned on blade.
   f. Extruded Aluminum Louvers: Fabricated of extruded 6063-T5 or -T52 aluminum with a wall thickness of not less than0.081 inch.
   g. Mullions and Mullion Covers: Same material and finish as louvers. Provide mullions where indicated.

Provide mullions covers on both faces of joints between louvers.

h. Screens and Frames: For aluminum louvers, provide 1/2 inch square mesh, 14 or 16 gage aluminum or ¼ inch square mesh, 16 gage aluminum bird screening. Mount screens in removable, rewirable frames of same material and finish as the louvers.

i. Color shall be as selected by the Architect and approved by the Government

5. Fasteners And Accessories: Provide stainless steel screws and fasteners for aluminum louvers and zinc-coated or stainless steel screws and fasteners for steel louvers. Provide other accessories as required for complete and proper installation.

6. Finishes: Aluminum; Provide factory-applied organic coating. Organic Coating: Clean and prime exposed aluminum surfaces and apply a baked enamel finish conforming to AAMA 603.8, 0.8 mil minimum dry film thickness. Color shall be as selected by the Architect and approved by the Government.

SECTION 10260 - WALL AND CORNER GUARDS

Scope: 1. Provide wall and corner guards:

References: 1. The publications referenced above (or below) establish minimum requirements for materials, systems and execution which may be specified in this Section.

ALUMINUM ASSOCIATION (AA)

AA DAF-45 Designation System for Aluminum Finishes

AMERICAN SOCIETY FOR TESTING AND MATERIALS (ASTM)

ASTM A 167 Stainless and Heat-Resisting Chromium-Nickel Steel Plate, Sheet, and Strip
ASTM B 221 Aluminum and Aluminum-Alloy Extruded Bars, Rods, Wire, Profiles, and Tubes
ASTM D 256 Determining the IZOD Pendulum Impact Resistance of Plastics
ASTM D 635 Rate of Burning and/or Extent and Time of Burning of Self-Supporting Plastics in a Horizontal Position
ASTM E 84 Surface Burning Characteristics of Building Materials

NATIONAL ASSOCIATION OF ARCHITECTURAL METAL MANUFACTURERS (NAAMM)

NAAMM AMP 500 Manual Metal Finishes Manual for Architectural and Metal Products

SOCIETY OF AUTOMOTIVE ENGINEERS INTERNATIONAL (SAE)

SAE J 1545 Instrumental Color Difference Measurement for Exterior Finishes, Textiles and Color Trim

Submittals: 1. Shop Drawings: Drawings indicating locations and typical elevations of each type of item. Drawings shall show vertical and horizontal dimensions, full size sections, thickness of materials, and fastening details.

2. Product Data: Manufacturer's descriptive data, catalog cuts, installation instructions, and recommended cleaning instructions.

3. Samples: Manufacturer's standard samples indicating color and texture of materials requiring color and finish selection.

4. Certificates: Statements attesting that the items comply with specified fire and safety code requirements.

Warranty: 1. Manufacturer's standard performance guarantees or warranties that extend beyond a 1 year period shall be provided.

Products: 1. To the maximum extent possible, corner guards, and wall guards (bumper guards) shall be the standard products of a single manufacturer and shall be furnished as detailed. Drawings show general configuration of products required, and items differing in minor details from those shown will be acceptable.

2. Resilient Material: Resilient material shall consist of high impact resistant extruded acrylic vinyl, polyvinyl chloride, or injection molded thermal plastic and shall conform to the following:
   a. Minimum Impact Resistance: Minimum impact resistance shall be 18 ft. lb/sq. inch when tested in accordance with ASTM D 256, (Izod impact, ft. lbs per sq inch notched).
   b. Fire Rating: Fire rating shall be Class 1 when tested in accordance with ASTM E 84, having a maximum flame spread of 25 and a smoke developed rating of 450 or less. Material shall be rated self extinguishing when tested in accordance with ASTM D 635. Material shall be labeled and tested by an approved nationally known testing laboratory. Resilient material used for protection on fire rated doors and frames shall be listed by the testing laboratory performing the tests. Resilient material installed on fire rated wood/steel door and frame assemblies shall have been tested on similar type assemblies. Test results of material tested on any other combination of door/frame assembly will not be acceptable.
   c. Integral Color: Colored components shall have integral color and shall be matched in accordance with SAE J 1545 to within plus or minus 1.0 on the CIE-LCH scales.

3. Corner Guards:
   a. Resilient Corner Guards: Corner guard units shall be surface mounted type, radius formed to profile shown. Corner guards shall be 54 inches high. Mounting hardware, cushions, and base plates shall be furnished. Assembly shall consist of a snap-on corner guard formed from high impact resistant resilient material, minimum 0.078 inch thick, mounted on a continuous aluminum retainer. Extruded aluminum retainer shall conform to ASTM B 221, alloy 6063, temper T5 or T6. Flush mounted type guards shall act as a stop for adjacent wall finish material. Factory fabricated end closure caps shall be furnished for top and bottom of surface mounted corner guards. Flush mounted corner guards installed in fire rated wall shall maintain the rating of the wall. Insulating materials that are an integral part of the corner guard system shall be provided by the manufacturer of the corner guard system. Exposed metal portions of fire rated assemblies shall have a paintable surface.
   b. Stainless Steel Corner Guards: Stainless steel corner guards shall be fabricated of 0.0625 inch thick material conforming to ASTM A 167, type 302 or 304. Corner guards shall be 54 inches high. Corner guard shall be formed to dimensions shown.

4. Wall Guards, Combination Handrail/Wall Guards and Handrails: Wall guards, combination handrail/wall guards, and handrails shall; consist of snap-on covers of high impact resistant resilient material on a continuous, extruded aluminum retainer and shall be provided with prefabricated end closure caps, inside and outside corners, concealed splices, cushions, mounting hardware and other accessories standard with the manufacturer. Extruded aluminum retainers shall conform to ASTM B 221, alloy 6063, temper T5 or T6. End caps and corners shall be field adjustable to assure close alignment with handrails and wall guards. Wall guards shall be profile as shown.

5. Trim, fasteners and anchors: Vinyl trim, fasteners and anchors shall be provided for each specific installation as shown.

6. Finish:
   a. Aluminum Finish: Finish for aluminum shall be in accordance with AA DAF-45. Exposed aluminum

shall be designation AA-C22A31 chemically etched medium matte, with clear anodic coating class II architectural coating 0.010 mm thick. Concealed aluminum shall be mill finish.

b. Stainless Steel Finish: Finish for stainless steel shall be in accordance with NAAMM AMP 500 Manual, finish number 4.

c. Resilient Material Finish: Finish for resilient material shall be pebble grain texture with colors in accordance with SAE J 1545.

7. Color: Color, texture and pattern shall be as selected by the Architect and approved by the Government

SECTION 10350 - FLAGPOLES

Scope: 1. Provide Ground mounted flagpole systems.

References: 1. The publications referenced above (or below) establish minimum requirements for materials, systems and execution which may be specified in this Section.

AMERICAN ASSOCIATION OF STATE HIGHWAY AND TRANSPORTATION OFFICIALS (AASHTO)

AASHTO M-36 Corrugated Metal Culvert Pipe.

AMERICAN SOCIETY FOR TESTING AND MATERIALS (ASTM)

ASTM B241 Aluminum and Aluminum-Alloy Seamless Pipe and Seamless Extruded Tube.

Submittals: 1. Product Data:

a. Provide data on pole, accessories, and configurations.

b. Provide operating data for the controller.

c. Maintenance Data: Provide lubrication and periodic maintenance requirement schedules.

Acceptable Manufacturer Products; Manufacturers products listed in this specification are referenced to establish a standard of quality. The following manufacturer products are specifically mentioned in this specification:

Flagpole: American Flagpole,
800.368.7171
www.americanflagpole.com

Flagpole: Ewing Flagpoles., Inc.;
2316 Delaware Avenue #283
Buffalo, NY 14216
800.663.7653

Flagpole: Concord Industries, Inc.
4150-A Kellway Circle
P. O. Box 1163
Addison, Texas 75001
800.527.3902
www.flagpoles.com

2. Shop Drawings: Indicate detailed dimensions, base attachment details, anchor requirements, and imposed loads.

3. Samples: Submit two samples 4” x 4” in size illustrating pole material, color, and finish.

Products: 1. Aluminum: ASTM B241, 6063 alloy, T6 temper.

2. Pole Configuration: Ground Mounted, tapered shaft, internal halyard with winch.

3 Components And Accessories:
   a. Finial Ball: Stainless steel, 3” diameter.
   b. Truck Assembly: Cast aluminum revolving, stainless steel ball bearings, non-fouling.
   c. Flag: provided by others
   d. Winch: An internal winch operated by a removable handcrank. The winch contains an automatic brake system to permit locking of the flag in any position.
   e. Winch Box: Aluminum, with built-in hinge and lock assembly, attached to pole with tamper proof screws inside box. Provide two keys to operate the lock.
   f. Halyard: Stainless steel aircraft cable with two chrome plated bronze swivel snaphooks, plastic covered counterweight and beaded sling.
   g. Primer: As recommended by the flagpole manufacturer.

4. Mounting Components: Foundation to be sized based on local conditions.
   a. Foundation Tube Sleeve: AASHTO M-36, corrugated 16 gage steel, galvanized, depth as recommended by the flagpole manufacturer.
   b. Pole Base Attachment: Flush aluminum base with base cover.
   c. Lighting Ground Rod: 12 inch long copper rod, 0.188 inch diameter.
   d. Lightning Ground Cable: Copper No. 6 AWG, soft drawn.

5. Finishes: Shall be as selected by the Architect and approved by the Government.

SECTION 10430 - EXTERIOR SIGNAGE

Scope: 1. Dimensional Building letters and plaques.

References: 1 The publications referenced above (or below) establish minimum requirements for materials, systems and execution which may be specified in this Section.

AMERICAN SOCIETY FOR TESTING AND MATERIALS (ASTM)

ASTM A 36/A 36M Carbon Structural Steel
ASTM A 123/A 123M Zinc (Hot-Dip Galvanized) Coatings on Iron and Steel Products
ASTM A 570/A 570M Steel, Sheet and Strip, Carbon, Hot-Rolled, Structural Quality
ASTM A 653/A 653M Steel Sheet, Zinc-Coated (Galvanized) or Zinc-Iron Alloy-Coated (Galvannealed) by the Hot-Dip Process
ASTM A 924/A 924M General Requirements for Steel Sheet, Metallic-Coated by the Hot-Dip Process
ASTM B 26/B 26M Aluminum-Alloy Sand Castings
ASTM B 108 Aluminum-Alloy Permanent Mold Castings
ASTM B 209 Aluminum and Aluminum-Alloy Sheet and Plate
ASTM B 221 Aluminum and Aluminum-Alloy Extruded Bars, Rods, Wire, Profiles, and Tubes

AMERICAN WELDING SOCIETY (AWS)

AWS C1.1M/C1.1 Recommended Practices for Resistance Welding
AWS D1.1 Structural Welding Code - Steel

AWS D1.2 Structural Welding Code - Aluminum

Submittals:

1. Shop Drawings: Drawings showing elevations of each type of sign; dimensions, details, and methods of mounting or anchoring; shape and thickness of materials; and details of construction. A schedule showing the location, each sign type, and message shall be included.

2. Product Data:
   a. Manufacturer's installation instructions and cleaning instructions.
   b. Exterior signage schedule in electronic media with spread sheet format. Spread sheet shall include sign location, sign type, and message.

3. Samples: One sample of each type of sign. Each sample shall consist of a complete sign panel with letters and symbols. Samples may be installed in the work, provided each sample is identified and location recorded. Two samples of manufacturer's standard color chips for each material requiring color selection and 12 inch square sample of sign face color sample.

Warranty:

1. Manufacturer's standard performance guarantees or warranties that extend beyond a one year period shall be provided.

Products:

1. Modular Exterior Signage System: Exterior signage shall consist of a system of coordinated directional, identification, and regulatory type signs located where shown. Dimensions, details, materials, message content, and design of signage shall be as shown.

2. Metal Plaques: Plaques shall be ‘United States Army Reserve Minuteman’ aluminum plaque: Provided by the Government and installed by the Contractor location of plaques shall be as shown or as directed.

3. Dimensional Building Letters
   a. Fabrication: Letters shall be fabricated from cast bronze or cast aluminum. Letters shall be cleaned by chemical etching or cleaned ultrasonically in a special degreasing bath. Letters shall be packaged for protection until installation.
   b. Typeface: Typeface shall be helvetica medium.
   c. Size; Letter size shall be as indicated.
   d. Finish: Polished bronze or with clear coat finish shall be provided.
   e. Mounting: Threaded studs of number and size as recommended by manufacturer, shall be used for concealed anchorage. Letters which project from the building line shall have stud spacer sleeves. Letters, studs, and sleeves shall be of the same material. Templates for mounting shall be supplied.

3. Aluminum Alloy Products: Aluminum alloy products shall conform to ASTM B 209 for sheet or plate, ASTM B 221 for extrusions and ASTM B 26 or ASTM B 108 for castings. Aluminum extrusions shall be provided at least 1/8 inch thick and aluminum plate or sheet at least 16 gauge thick. Welding for aluminum products shall conform to AWS C1.1M/C1.1.

4. Steel Products: Structural steel products shall conform to ASTM A 36. Sheet and strip steel products shall conform to ASTM A 570. Welding for steel products shall conform to AWS D1.2.

5. Cast Bronze: Components shall be fabricated with sharp corners, flat faces, and accurate profiles. Burrs and rough spots shall be removed and polished. Faces shall be finished to a uniform high luster. Cast bronze shall be in accordance with ASTM B 62.

5. Shop Fabrication And Manufacture
   a. Factory Workmanship: Work shall be assembled in the shop, as far as practical, ready for installation at the site. Work that cannot be shop assembled shall be given a trial fit in the shop to ensure proper field

assembly. Holes for bolts and screws shall be drilled or punched. Drilling and punching shall produce clean, true lines and surfaces. Welding to or on structural steel shall be in accordance with AWS D1.1. Welding shall be continuous along the entire area of contact. Exposed welds shall be ground smooth. Exposed surfaces of work shall have a smooth finish and exposed riveting shall be flush. Fastenings shall be concealed where practical. Items specified to be galvanized shall be by hot-dip process after fabrication if practical. Galvanization shall be in accordance with ASTM A 123 and ASTM A 653, as applicable. Other metallic coatings of steel sheet shall be in accordance with ASTM A 924. Joints exposed to the weather shall be formed to exclude water. Drainage and weep holes shall be included as required to prevent condensation buildup.

b. Dissimilar Materials: Where dissimilar metals are in contact, or where aluminum is in contact with concrete, mortar, masonry, wet or pressure-treated wood, or absorptive materials subject to wetting, the surfaces shall be protected with a coat of asphalt varnish or a coat of zinc-molybdate primer to prevent galvanic or corrosive action.

c. Shop Painting: Surfaces of miscellaneous metal work, except nonferrous metal, corrosion resisting steel, and zinc-coated work, shall be given one coat of zinc-molybdate primer or an approved rust-resisting treatment and metallic primer in accordance with manufacturer's standard practice. Surfaces of items to be embedded in concrete shall not be painted. Upon completion of work, damaged surfaces shall be recoated.

6. Color, Finish, And Contrast: For buildings required to be handicapped-accessible, the characters and background of signs shall be eggshell, matte, or other non-glare finish. Characters and symbols shall contrast with their background - either light characters on a dark background or dark characters on a light background. Color and finishes shall be as selected by the Architect and approved by the Government

SECTION 10440 - INTERIOR SIGNAGE

Scope: 1. Provide specialty building directory, and interior signage.

References 1. The publications referenced above (or below) establish minimum requirements for materials, systems and execution which may be specified in this Section.

ALUMINUM ASSOCIATION (AA)

AA DAF-45	Designation System for Aluminum Finishes
AA PK-1	Registration Record of Aluminum Association Alloy Designations and Chemical Composition Limits for Aluminum Alloys in the Form of Castings and Ingot

AMERICAN ARCHITECTURAL MANUFACTURERS ASSOCIATION (AAMA)

AAMA 605	Voluntary Specification, Performance Requirements and Test Procedures for High Performance Organic Coatings on Aluminum Extrusions and Panels

AMERICAN NATIONAL STANDARDS INSTITUTE (ANSI)

ANSI Z97.1	Safety Performance Specifications and Methods of Test for Safety Glazing Materials Used in Buildings

AMERICAN SOCIETY FOR TESTING AND MATERIALS (ASTM)

ASTM B 209	Aluminum and Aluminum-Alloy Sheet and Plate
ASTM B 221	Aluminum and Aluminum-Alloy Extruded Bars, Rods, Wire, Profiles, and Tubes
ASTM C 1036	Flat Glass

AMERICAN WELDING SOCIETY (AWS)

AWS D1.2	Structural Welding Code - Aluminum

NATIONAL FIRE PROTECTION ASSOCIATION (NFPA)

NFPA 70	National Electrical Code

Submittals:

1. Shop Drawings: Drawings showing elevations of each type of sign, dimensions, details and methods of mounting or anchoring, shape and thickness of materials, and details of construction. A schedule showing the location, each sign type, and message shall be included.

2. Product Data: six copies of manufacturer's descriptive data, catalogs cuts, installation and cleaning instructions.

3. Samples: One sample of each of the following sign types showing typical quality and workmanship. The samples may be installed in the work, provided each sample is identified and location recorded. Color and finish of each type selected.
   a. Two samples of full size directional sign.
   b. Two samples of full size door identification sign
   c. Two samples of full size interior plaque signs for the following:
      1) Office
      2) Restroom
      3) directional fire evacuation.
   d. Building Directory.
      1) Two samples 6 inches in length of frame material.
      2) Two samples 6 inches long by height of header panel material with example lettering showing upper and lower case letter to illustrate letter and spacing.
      3) Two samples 6 inch square door glazing
      4) Two samples 6 inches long by height of message strip material with example lettering showing minimum two words using one upper case letter for each word and lower case letters for the remainder to illustrate lettering and spacing.

4. Operation and Maintenance Data: : Operations and Maintenance Manuals will be submitted in accordance with the requirements of specification Section 01800 Equipment Operating, Maintenance, And Repair Manuals. Six copies of operating instructions outlining the step-by-step procedures required for system operation shall be provided. The instructions shall include simplified diagrams for the system as installed. Six copies of maintenance instructions listing routine procedures, repairs, and guides shall be provided. The instructions shall include the manufacturer's name, model number, service manual, parts list, and brief description of all equipment and their basic operating features. Each set shall be permanently bound and shall have a hard cover. The following identification shall be inscribed on the covers: the words "OPERATING AND MAINTENANCE INSTRUCTIONS", name and location of the facility, name of the Contractor, and contract number.

Extra Stock:

1. The Contractor shall provide 5 percent of total extra frames and extra stock of the following: blank plates of each color and size for each sign type, pressure-sensitive letters in each color and size for each sign type, and changeable message strips for each sign type.

Products:

1. General:
   a. Interior signage shall be of the design, detail, sizes, types, and message content shown on the drawings, shall conform to the requirements specified, and shall be provided at the locations indicated. Signs shall be complete with lettering, framing as detailed, and related components for a complete installation. Conform to EPA requirements for recycled materials.
   b. Character Proportions and Heights: Letters and numbers on indicated signs in handicapped-accessible buildings, which do not designate permanent rooms or spaces, shall have a width-to-height ratio between 3:5 and 1:1 and a stroke-width-to-height ratio between 1:5 and 1:10. Characters and numbers on indicated signs shall be sized according to the viewing distance from which they are to be read. The minimum height is measured using an upper case letter "X". Lower case characters are permitted. Suspended or projected overhead signs shall have a minimum character height of 3 inches.
   c. Raised and Brailled Characters and Pictorial Symbol Signs (Pictograms): Letters and numbers on indicated signs which designate permanent rooms and spaces in handicapped-accessible buildings shall be raised 1/32 inch upper case, sans serif or simple serif type and shall be accompanied with Grade 2 Braille. Raised characters shall be at least 5/8 inch in height, but no higher than 2 inches. Pictograms shall be accompanied by the equivalent verbal description placed directly below the pictogram. The border dimension of the pictogram shall be 6 inch minimum in height. Indicated accessible facilities shall use the international symbol of accessibility.

2. Room Identification/Directional Signage System:
   a. Holder: Integrally colored injection molded high impact plastic complete with mounting system, ready for insert installation. Corners of signs shall be rounded. Wall mounting shall be double sided tape for wall mounting and Velcro or manufacturers' recommended factory applied mating strips for attachment to System Furniture. Size as indicated at the end of this section. Color shall be as selected by the Architect and approved by the Government.
   b. Changeable Message Strip Signs: Changeable message strip signs shall consist of injection molded high impact plastic . Size of signs shall be as at the end of this section. Corners of signs shall be rounded to match frame.
   c. Mounting Inserts To Holder: Double side vinyl foam tape when mounting is permanent, when inserts are subject to frequent change use 1/32 inch thick magnetic tape. Color shall be as selected by the Architect and approved by the Government.
   d. Provide the following options indicated in the Schedule at end of this section:
      Split inserts
      Hangable slide inserts
      Window sign insert module.
      Window sign.
   e. Graphics: Signage graphics for modular identification/directional signs shall conform to the following:
      1) Message shall be applied to panel using the silkscreen process. Silkscreened images shall be executed with photo screens prepared from original art. Handcut screens will not be accepted. Original art shall be defined as artwork that is a first generation reproduction of the specified art. Edges and corners shall be clean.
   f. Graphics Application: Message content is specified in the Sign Schedule at the end of this section; Verify message with the Contracting Officer. Typeface shall be Helvetica Medium, size as indicated. Background color shall be as selected by the Architect and approved by the Government.

3. Building Directories: Building directories shall be lobby directories surface mounted, non-illuminated, wall hung, with message strips. Where required, message content shall be shown and scheduled on drawings.
   a. Header Format: Header format shall be Helvetica Medium, uppercase. Imprint color.
   b. Door Glazing: Door glazing shall be clear acrylic sheet.
   c. Door Construction: Extruded Alloy 385 architectural bronze conforming to ASTM B 455, minimum 1/8 inch thick. Corners shall be mitered and assembled with concealed fasteners. Hinges shall be

concealed continuous stainless steel, in natural anodized aluminum finish . Glazing shall be set in frame with resilient glazing channels.

d. Door Locks: Door locks shall be manufacturer's standard, and shall be keyed alike.

e. Fabrication: Extruded aluminum frames and trim shall be ASTM B 221, 6063-T5 extruded aluminum alloy frame surrounding solid backing plate with PVC laminated to solid backing, provide holes in back plate. Finish and color shall be natural anodized aluminum.

f. Message Strips: Message strips shall be injection molded plastic with digital computer generated and photo silk screened typography; provide sufficient strips to fill directory, up-datable by user with book reordering and with 7 to 10 day delivery. Type style shall be Helvetica Medium, size shall be3/4 inch initial caps. Provide strips with self aligning reveal and flex and stack ability for ease of installation and removal. Imprint color as selected.

g. Directory Capacity: Capacity shall be as follows:
Number of sides: one
Number of message strips per column: 21
Number of Columns: Two.

SECTION 10500 - METAL LOCKERS

Scope: 1. Provide single and double tier metal lockers and bench seat.

References: 1. The publications referenced above (or below) establish minimum requirements for materials, systems and execution which may be specified in this Section.

AMERICAN SOCIETY FOR TESTING AND MATERIALS (ASTM)

ASTM A653	Standard Specification for Steel Sheet, Zinc-Coated (Galvanized) or Zinc Iron Alloy Coated (Galvanized) by the Hot-Dip Process

Submittals: 1. Product Data: Provide data on bench and locker types, sizes and accessories.

2. Shop Drawings: Indicate locker plan layout, numbering plan and key codes.

3. Samples: Submit two samples 3 by 6 inches in size, of each color selected; applied to specified base metal.

Products: 1. Sheet Steel: ASTM A653 Grade D, Coating Designation G90, stretcher leveled; to the following minimum thicknesses:

a.	Body and Shelf:	24 gage
b.	Door Outer Face:	16 gage
c.	Door Inner Face:	20 gage
d.	Door Frame:	16 gage
e.	Hinges:	14 gage
f.	Base:	20 gage
g.	Sloping Top:	20 gage
h.	Trim:	20 gage

2 Single Tiered Locker: Size shall be a minimum 12 inches wide, 15 inches deep, 72 inches high (Dust covers around the entire perimeter of the base will increase height by 6 inches to 78 inches.) Provide dust covers with sloped tops and end covers to preclude dust accumulation. End panels as required per drawing configuration. Maximum size of grouping units is three lockers per unit. Latch hook to have bevel on front upper edge to allow latch clip to ride up slope as door closes. Steel door frames of minimum 16 gauge metal

with three hinges of minimum 14 gauge steel. Vertical members shall have an additional flange to form continuous door strike. Minimum gauge for top, bottom, shelves, sides, back and row ends of 24 gauge steel. Eyelet for padlock must accept a 5/16 inch padlock shank, providing a secured locking three point latching mechanism. Lockers will be sequentially numbered with a plate beginning with #1. Locker will contain a single shelf at top and wall hooks on both sides. Louvers for circulation both at top and bottom. Lockers are to be installed in the room with dust covers installed. Color shall be as selected by the Architect and approved by the Government

3 Double Tiered Locker: Size shall be a minimum 12 inches wide, 15 inches deep, 36 inches high, 72 inches over all (Dust covers around the entire perimeter of the base will increase height by 6 inches to 78 inches.) Provide dust covers with sloped tops and end covers to preclude dust accumulation. End panels as required per drawing configuration. Maximum size of grouping units is three lockers per unit. Latch hook to have bevel on front upper edge to allow latch clip to ride up slope as door closes. Steel door frames of minimum 16 gauge metal with three hinges of minimum 14 gauge steel. Vertical members shall have an additional flange to form continuous door strike. Minimum gauge for top, bottom, shelves, sides, back and row ends of 24 gauge steel. Eyelet for padlock must accept a 5/16 inch padlock shank, providing a secured locking three point latching mechanism. Lockers will be sequentially numbered with a plate beginning with #1. Locker will contain a single shelf at top and wall hooks on both sides. Louvers for circulation both at top and bottom. Lockers are to be installed in the room with dust covers installed. Color shall be as selected by the Architect and approved by the Government

4. Locker Benches: Stationary free standing type; bench top of laminated maple species wood, stained, sealed and varnished; pedestals of chrome steel 17 1/2 inches high.

Fabrication: 1. Locker Unit:
- a. Mounting: Surface mounted and free standing.
- b. Base: Metal base, 4 inches high.
- c. Top: Sloped metal with closures.
- d. Locking: Equipped for built-in with master key cylinder locks.
- e. Ventilation Method: Louvered top and bottom frame and top and bottom of door.

SECTION 10520 - FIRE EXTINGUISHERS, CABINETS AND ACCESSORIES

Scope: 1. Provide portable fire extinguishers and cabinets. Provide mounting brackets where no cabinet is indicated.

References: 1. The publications referenced above (or below) establish minimum requirements for materials, systems and execution which may be specified in this Section.

AMERICAN NATIONAL STANDARDS INSTITUTE (ANSI)

ANSI/NFPA 10	Portable Fire Extinguishers.
ANSI/UL 711	Rating and Fire Testing of Fire Extinguishers.

Submittals: 1. Product Data:
- a. Fire Extinguisher Cabinet Product Data: Provide cabinet and extinguisher operational features, color and finish, and anchorage details.
- b. Maintenance Data: Include test, refill or recharge schedules and re-certification requirements.
- c. Acceptable Manufacturer Products: Manufacturers products listed in this specification are referenced to establish a standard of quality. The following manufacturer products are specifically mentioned in this specification:

Fire Extinguisher Cabinets (FEC)

FEC: J. L. Industries;
4450 W. 78th St. Circle
Bloomington, MN 55435,
952-835-6850

FEC: Larsen's Manufacturing Company;
7421 Commerce Lane N.E.
Minneapolis, MN
800-527-7367

FEC: Potler-Roemer;
16833 Edwards Rd.,
Cerritos, CA 90701-2417
310-404-3753

2. Shop Drawings: Indicate cabinet physical dimensions, rough-in measurements for recessed cabinets, and location.

Coordination: 1. Fire extinguishers shall also be provided. Fire extinguisher shall be 20 lb size minimum and shall meet NFPA 10 requirements. Coordinate size of cabinet and extinguisher. Coordinate installation of fire extinguishers prior to contract completion. Coordinate the exact location of cabinet with other work.

Quality Assurance: 1. Provide units conforming with ANSI/UL 711.

Regulatory Requirements: 1. Conform to ANSI/NFPA 10 for requirements for extinguishers.

Products: 1. Fire extinguishers: Fire extinguishers shall also be provided. Fire extinguisher shall be 20 lb ABC Dry Chemical fire extinguisher minimum and shall meet NFPA 10 requirements. Contractor shall determine type of extinguishers required. Coordinate size of cabinet and extinguisher. Coordinate installation of fire extinguishers prior to contract completion. Coordinate the exact location of cabinet with other work.

2. Cabinets: Trimless recessed or semi-recessed steel cabinet with baked enamel finish. Steel door shall be red baked solid type, 30 gage with white silk screened words: "Fire Extinguisher" arranged vertically. Cabinet shall be sized to accommodate a 20 lb ABC Dry Chemical fire extinguisher.

SECTION 10530 - MISCELLANEOUS SPECIALTIES

Scope: 1. Provide miscellaneous items as specified

Submittals: 1. Product Data: Product certification and installation recommendation data.
a. Acceptable Manufacturer Products: Manufacturers products listed in this specification are referenced to establish a standard of quality. The following manufacturer products are specifically mentioned in this specification:

2. Shop Drawings: Drawings showing construction and installation details.

3. Samples: Submit color chart.

Warranty: 1. Provide manufacturer's standard warranty for the items.

Products: 1. Proprietary Product Names: Manufacturers names, model numbers, and colors are given to clarify the designers intent and are not intended to limit selection of similar products from acceptable manufacturers

2. Security Mesh: Security mesh shall be a minimum of 0.072 inches thick and weigh a minimum of 0.75 lb/sq ft. The mesh shall be diamond type with a minimum of 73 percent open area. The overall mesh size and orientation shall be as recommended by the manufacturer.

3. Mooring Eye: Mooring eye shall be a standard casting product constructed of ductile iron and made to be installed in concrete with top of casting flush with top of finish concrete.

4. Open Work Bench: Penco Products or equal open work bench, adjustable height unit from 30 to 36 inch with laminated hardwood top (#30567). Provide back and end stops (#30988); riser with electrical strip (#30967 & 09372); case and drawer 22 inch wide (#30962), 72 inch shelf and stringer (#31120H & 31137H). standard finish for all steel parts, #028 'Grey' baked enamel.

SECTION 10550 - POSTAL SPECIALTIES

Scope: 1. Provide postal specialties acceptable to postal authorities.

Submittals: 1. Product Data.

Products: 1. Proprietary Product Names: Manufacturers names, model numbers, and colors are given to clarify the designers intent and are not intended to limit selection of similar products from acceptable manufacturers

2. Mailboxes: Mailboxes shall be U.S. Postal Service approved. Mailboxes, materials, sizes, construction, and installation shall comply with U.S. Postal Service regulations and shall be fully approved by the U.S. Postal Service.
   a. Materials: Quantities and arrangement of mailboxes shall be as indicated on the drawings. Mailboxes shall be rear-loading type with sheet aluminum removable rear covers strengthened with formed sheet aluminum stiffeners. Framework supporting compartment doors shall be fabricated from high strength extruded aluminum alloy. Compartment doors shall be fabricated from high strength extruded aluminum alloy, with a minimum of 1/8 inch thickness, and swing on concealed hinge pins. When closed, the door shall interlock with frame member along hinge side and shall be precision fitted to preclude prying. Doors shall be reinforced vertically along both sides and near center with integral ribs. Locks on individual compartment doors shall be springlatch type lock actuated by a cam type lock with two change keys per lock and a minimum of 1000 available key changes. All locks within project shall be keyed differently. Compartment construction shall be double-walled high strength sheet aluminum alloy with vertical stiffeners of formed aluminum. Finish shall be as indicated. Mail box manufacturer shall furnish aluminum channel type card holders with pressure sensitive backing to accommodate 7/16 inch by 2 1/2 inch cards for individual and/or unit names.

SECTION 10605 - WIRE MESH PARTITIONS

Scope: 1. Provide wire mesh partitions for storage, stockroom, and security separations.

Submittals: 1 Product Data.

2. Shop Drawings.

Products: 1. Partitions, Diamond Mesh Type: Partitions shall be constructed of metal fabric attached to structural steel

framing members. Fabric shall be 10 gauge steel wires woven into 1 1/2 inch diamond mesh with wire secured through weaving channels. Framing members shall be channels 1 1/2 inch by 1/8 inch minimum size. Channel frames shall be mortised and tenoned at intersections. Steel frames, posts, and intermediate members shall be of the sizes and shapes indicated. Cast-iron floor shoes and caps shall have setscrew adjustment. Doors and grilles shall be provided as indicated, complete with hardware and accessories including sliding mechanisms, locks, guard plates, sill shelves and brackets, and fixed pin butts. Doors and grilles shall have cover plates as indicated. Dutch doors shall have a lock for each leaf. A continuous rubber bumper shall be provided at bottom of grille frame. Locks shall be bronze, cylinder, mortise type. Keying shall be coordinated with Section 08710 DOOR HARDWARE. Ferrous metal portions of partitions and accessories shall be galvanized.

#1 SECTION 10650 - OPERABLE PARTITIONS

Scope: 1. Provide operable partitions.

References: 1. The publications referenced above (or below) establish minimum requirements for materials, systems and execution which may be specified in this Section.
AMERICAN SOCIETY FOR TESTING AND MATERIALS (ASTM)

ASTM E 84	Surface Burning Characteristics of Building Materials
ASTM E 90	Laboratory Measurement of Airborne Sound Transmission Loss of Building Partitions
ASTM E 413	Rating Sound Insulation

Submittals: 1. Shop Drawings: Drawings containing complete schematic diagrams and details required to demonstrate that the system has been coordinated and will properly function as a unit. Drawings shall show proposed layout and anchorage of equipment and appurtenances, and equipment relationship to other parts of the work including clearances for maintenance and operation.

2. Product Data: Manufacturer's descriptive data, performance charts, catalog cuts, and installation instructions.

3. Samples: Color samples of specified surfaces and finishes to match those specified. Finish and color requirements shall not be limited to manufacturer's standard selections in order to meet these requirements.

4. Certificates: Certificate attesting that the materials meet the requirements specified and that partitions have specified acoustical and flame retardant properties, as determined by test.

5. Operation and Maintenance Data: Six complete copies of operating instructions outlining the procedures required for electrically operated partitions. The instructions shall include the manufacturer's name, model number, service manual, parts list, and brief description of all equipment and operating features. Data shall include a complete list of parts and supplies, with current unit prices and source of supply, and a list of the parts recommended by the manufacturer to be replaced after 1 year and 3 years of service. Six complete copies of maintenance instructions explaining routine maintenance procedures including inspection, adjustments, lubrication, and cleaning. The instructions shall list possible breakdown, methods of repair, and a troubleshooting guide.

Warranty: 1. Manufacturer's standard performance guarantees or warranties that extend beyond a 1 year period shall be provided.

Products: 1. General Requirements:

a. The Contractor shall supply and install flat wall, manual operation,, paired panels, center stacking, top supported, acoustical operable partitions as shown on the drawings including all hardware, seals, track and rollers as needed to close the specified opening. The panel shall have a minimum Sound Transmission Coefficient (STC)of 48 measured in accordance with ASTM E 90. The partition shall be made up of a series of rigid, flat wall panels; each panel being a one-piece assembly nominally 48 inches wide. Unless otherwise specified, the wall shall comprise the least number of panels. The mechanical seal of the panel shall actuate with a single operating action.
b. The manual operation shall be accomplished with less than 200 ft/min force to start movement at the rate of 3.33 ft/s. A removable handle shall be used to extend and retract the bottom operable seals; vertical movement of seals shall be 2 inches. Closure to the lead wall shall be by use of a flexible bulb; final closing shall be accomplished by means of a lever exerting pressure against wall.

2. Material and equipment shall be the standard products of a manufacturer regularly engaged in the manufacture of such products and shall essentially duplicate items that have been in satisfactory use for at least 2 year prior to bid opening. Equipment shall be supported by a service organization that is, in the opinion of the Contracting Officer, reasonably convenient to the site. Door and partition finishes shall have a Class A rating when tested in accordance with ASTM E 84.
   a. Panel Surface Finish: Panel surface finish shall be **vertically-ribbed acoustical synthetic fabric material of 100% polyolefin**, Class A, Fire Resistive Grade according to ASTM E 84, 24 ga. thick, bacterial resistant Color shall be as selected.
   b. Hardware: Operable partitions shall have manufacturer's standard hardware. Latching door handles shall be chrome plated, hinges shall be stainless steel.
   c. Sweep Strips: Sweep strips shall be vinyl or other material which will not crack or craze with severe usage. Sweep strip shall control STC to the specified rating.
   d. Track: Track shall be recessed and shall be of extruded aluminum or enamel finish steel. Track shall be manufacturer's standard product designed for the weight of the finished partition. Track sections shall be provided in the maximum lengths practicable and secured to structure with threaded rods. Suitable joint devices such as interlocking keys shall be provided at each joint to provide permanent alignment of track.
   e. Metal Soffit: Soffit shall be provided when steel track is recessed. Soffit shall be of metal of adequate thickness to protect the ceiling from damage by door operation and shall be provided with the door manufacturer's standard neutral-color applied finish. Soffit on aluminum track shall be an integral part of the track..
   f. Vinyl Restrictions: Vinyl’s shall contain a non-mercury based mildewcide and shall be manufactured without the use of cadmium-based stabilizers.

3. Operable Partitions: Operable partitions shall consist of top hung ball bearing carriers which support paired modular panels. Partition finish shall have a flame spread rating of not more than 25 in accordance with ASTM E 84.
   a. Panels: Panels shall be constructed of minimum 16 gauge thick steel frames with minimum 22 gauge thick face panels spot welded to the frame. Panels shall be not more than 48 inches wide, except for end closure panels, and shall be full height to track. Panels shall lock in place to form a stable, rigid partition; low profile hinges shall project 1/4 inch maximum from panel edge. Panel thickness shall be minimum (3 1/2 inch nominal) and composition shall be designed to provide an STC rating of not less than 48 in accordance with ASTM E 90 and ASTM E 413.
   b. Finish: Panels shall be surfaced with factory applied, wall covering, acrylic backed, Class A, Fire Resistive Grade according to ASTYM E 84, 0.69 mm thick, bacterial resistant, which wraps around the vertical panel edges without vertical trim (trimless).
   c. Seals: Top and bottom seals shall consist of a vinyl sweep mechanical seal which will expand in place or shall be accomplished by using panels which can be lowered by a removable operating device. Vertical seal between panels shall be anodized, architectural grade, aluminum extrusion with vinyl sound seal.
   d. For operable partition that do not have automatic seals Contractor shall provide 3 removable operating

devices for each operable partition indicated on the drawings.

#1

SECTION 10670 – STORAGE SHELVING

Scope: 1. Metal Storage Shelving.

Submittals: 1. Product Data: Manufacturers products listed in this specification are referenced to establish a standard of quality.

2. Shop Drawings: Submit shop drawings showing location, ranges and extent of metal shelving systems. Show installation details at any special or non-standard conditions.
   a. Initial Selection Purposes: Submit manufacturer's standard size samples of colors and finishes.
   b. Verification Purposes: Submit 6" square samples of each color and finish required. Prepare from same material to be used for the work.

3. Samples: Manufacturer's standard color samples of specified finishes.

4. Design Data: Submit detailed calculations of seismic forces for fully loaded shelving, indicating compliance with seismic design requirements.

Quality Assurance: 1. Manufacturer Qualifications: Firm (material producer) with not less than 3 years of production experience, whose published literature clearly indicates general compliance of products with requirements of this section.

2. Installer Qualifications: Firm specializing in metal storage shelving installation with not less than 2 years of experience in installation of metal storage shelving and pallet racks similar to that required for this project.

3. Single Source Responsibility: Provide material produced by a single manufacturer for each shelving unit type.

Warranty: 1. Special Project Warranty: Submit a written warranty, executed by the Contractor, Installer and the Manufacturer, agreeing to repair or replace shelving units which fail in materials or workmanship within the specified warranty period. This warranty shall be in addition to and not a limitation of other rights the Government may have against the Contractor under the Contract Documents. Warranty period is 2 years after the date of Substantial Completion.

Maintenance: 1. Maintenance Instructions: Submit manufacturer's printed instructions for maintenance of installed work, including methods and frequency recommended for maintaining optimum condition under anticipated use conditions. Include precautions against materials and methods which may be detrimental to finishes and performance.

2. Replacement Materials: After completion of work, deliver not less than 2 of each type, color, and pattern of metal storage shelving, exclusive of material required to properly complete installation. Furnish 2% of accessory components as scheduled. Furnish replacement materials from same production run as materials installed. Package replacement materials with protective covering, identified with appropriate labels.

Products: 1. Acceptable Manufacturer Product:

Penco Products Inc.;
99 Brower Avenue

P. O. Box 378
Oaks, PA 19456-0378
800.562.1000
www.pencoproducts.com

Republic Storage Systems Co., Inc.;
1038 Beldon Avenue, NE
Canton, OH 44705
800.477.1255
www.republicstorage

2. Metal Storage Shelves:
   a. General: Minimum 20 gauge cold-rolled steel sheet metal, washed to receive powder coated baked enamel finish, higher gauge where indicated to provide appropriate loading capacity. Shelving shall meet the requirements of ANSI MH28.1.
   b. Open Shelving: Provide extra heavy-duty (Penco Class 2), 900 pound capacity open shelving units consisting of four upright corner pilasters, slotted to receive clips clipped together with shelves as indicated. Provide cross-braces laterally and at ends as required for stability with intended load. Shelves adjustable 38 mm on center. Provide 48 inches wide by 87 inches high units, unless otherwise indicated on drawings or in specifications. Provide 5 shelves of standard 24 and 32 inch depth.
   c. Lateral Cross Braces: Minimum 12 gauge, 1 inch wide steel band, formed and punched at each end, capable of bolting to T sections. Provide one pair of cross braces for every three sections of under 30 inches; two pairs for every two sections 30 inches and over.
   d. Bases: Channel-shaped to engage upright T sections with spring fasteners, minimum 20 gauge for 3 inch base, minimum 18 gauge for 6 inch base.
   e. Finish: Provide units in finishes and colors from manufacturer's standard grey.

SECTION 10800 - TOILET ACCESSORIES

Scope: 1. Provide toilet accessories at toilet and locker rooms.

References: 1. The publications referenced above (or below) establish minimum requirements for materials, systems and execution which may be specified in this Section.

AMERICAN NATIONAL STANDARDS INSTITUTE (ANSI)

ANSI A117.1 Safety Standards for the Handicapped.

AMERICAN SOCIETY FOR TESTING MATERIALS (ASTM)

ASTM A123	Zinc (Hot-Dip Galvanized) Coatings on Iron and Steel Products.
ASTM A167	Stainless and Heat-Resisting Chromium-Nickel Steel Plate, Sheet, and Strip.
ASTM A269	Seamless and Welded Austenitic Stainless Steel Tubing for General Service.
ASTM A366	Steel, Carbon, Cold-Rolled Sheet, Commercial Quality.

Submittals: 1. Product Data: Provide manufacturer's data on all accessories describing size, finish, details of function, attachment methods.
   a. Acceptable Manufacturer Products: Manufacturers products listed in this specification are referenced to establish a standard of quality. The following manufacturer products are specifically mentioned in this specification:

Bobrick Washroom Equipment, Inc.;
Bradley Corporation;
American Specialties;

2. Manufacturer's Instructions: Indicate manufacturer's installation procedures, perimeter conditions requiring special attention, and anchorage.

Regulatory Requirements: 1. Conform to ANSI A117.1 code for access for the handicapped.

Products:

1. Sheet Steel: ASTM A366.

2. Stainless Steel Sheet: ASTM A167, Type 304.

3. Tubing: ASTM A269, stainless steel.

4. Adhesive: Two component epoxy type waterproof.

5. Fasteners, Screws, and Bolts: Hot dip galvanized, tamper-proof, and security type.

6. Expansion Shields: Fiber, lead, or rubber as recommended by accessory manufacturer for component and substrate.

Schedule:

1. A-1, Mop and Broom Holder: Strip shall be constructed of 18 gage, Type 302 stainless steel no. 4 satin finish. Strip shall be formed with a return flange to the wall on top and a returned flange to the wall at the bottom. Holder pieces shall be constructed from molded resilient rubber with ribbed gripping surface. Strip shall be 34 inches long with 6 holders.

   A-2, Stainless Steel Framed Mirror: Mirror shall be framed with one-piece, type 304, stainless steel angle, with continuous integral stiffener on all sides and beveled edge. Corners shall be heliarc welded, ground and polished smooth. All exposed surfaces shall be satin finish. Mirror shall be No. 1 quality ¼ inch tempered glass. All edges shall be protected by high impact plastic filler strips. Back of mirror shall be protected by shock- absorbing, waterproof, non-abrasive ¼ inch thick polystyrene padding. Galvanized steel back shall have integral hanging brackets for mounting on concealed rectangular wall hanger(s) and be secured with concealed Phillips-head locking screws in lower frame.

   A-3, Surface Mounted Toilet Seat Cover: Surface mounted toilet seat cover shall be type 304, 20 ga stainless steel with drawn, one piece, seamless construction; exposed surfaces shall have satin finish. Unit shall have a rectangular or oval opening for dispensing toilet seat covers and a concealed opening in bottom for filling. Capacity shall be 250 paper toilet seat covers.

   A-4, Recessed Paper Towel Dispenser and Waste Receptacle: Recessed paper towel dispenser and waste receptacle shall be type 304 stainless steel with all welded construction; exposed surfaces shall have satin finish. Door shall be 18 gage and secured to the cabinet with a concealed, full length stainless steel piano hinge and equipped with a stainless steel steel cable door swing limiter and two tumbler locks. Paper towel dispenser shall be capable of dispensing 600 C fold, 800 mutlifold or 1100 singlefold paper towels. Waste receptacle shall be furnished with a removable, leakproof rigid molded plastic waste container with a capacity of 6 gal.

   A-5, Surface Mounted Paper Towel Dispenser and Waste Receptacle: Surface mounted paper towel dispenser and waste receptacle shall be constructed entirely of Type 304, 22 ga. stainless steel, welded construction with exposed surfaces satin finish. Flange shall be drawn one-piece seamless construction.

Door shall be double pan construction and equipped with a knob latch. Door shall be secured to cabinet with full-length stainless steel piano hinge. Paper Towel Dispenser shall be capable of dispensing 600 C-fold or 800 Multifold paper towels without use of adapters. Waste receptacle shall have a formed, one-piece, seamless, removable front panel with top edge hemmed and shall be equipped with interior clips for securing furnished reusable vinyl liner. Waste receptacle shall have a capacity of minimum 16 gal. .

A-6 and A-7, Partition Mounted Double Toilet Tissue Dispenser with Toilet Seat Dispenser and Feminine Napkin Disposal For Servicing Two Toilet Compartments - Partition mounted double roll toilet tissue dispenser each side shall be type 304 stainless steel with all welded construction. Exposed surfaces shall have satin finish. Toilet seat dispenser shall hold up to 1000 single or half folded toilet seat covers. Front of door shall be drawn, one piece, seamless construction. Toilet seat dispenser door shall be secured to cabinet with piano hinge equipped with a flush tumbler lock. Unit shall dispense two standard core toilet tissue rolls on each side. Unit shall include four heavy duty, one-piece molded polyethylene spindles. Dual feminine napkin disposal shall be constructed entirely of type 302 stainless steel. Sanitary napkin dispenser door shall be secured to cabinet with a spring loaded, full length stainless steel piano hinge and equipped with international graphic symbol. Unit A-7 has one side flush with the face of the toilet partition to allow for grab bar clearance.

A-8, surface-Mounted Napkin Disposal And Dual Roll Toilet Tissue Dispenser: Surface mounted toilet tissue dispenser and sanitary napkin disposal shall be type 304 stainless steel with all welded construction. Exposed surfaces shall have satin finish. Front of door shall be drawn, one piece, seamless construction, secured to cabinet with piano hinge equipped with a flush tumbler lock. Self closing disposal panel shall be secured to cabinet with a spring loaded, full-length stainless steel piano hinge and equipped with international graphic symbol identifying napkin disposal. Sanitary napkin disposal shall be furnished with a removable, leak proof, molded polyethylene receptacle with a capacity of 1 gal. Unit shall dispense two standard core toilet tissue rolls up to 5 inches in diameter. Unit shall include two heavy-duty, one-piece molded polyethylene spindles.

A-9 and A-10, Partition Mounted Double Toilet Tissue Dispenser with Toilet Seat Dispenser For Servicing Two Toilet Compartments: Partition mounted double roll toilet tissue dispenser each side shall be type 304 stainless steel with all welded construction. Exposed surfaces shall have satin finish. Toilet seat dispenser shall hold up to 1000 single or half-folded toilet seat covers. Front of door shall be drawn, one piece, seamless construction. Toilet seat dispenser door shall be secured to cabinet with piano hinge equipped with a flush tumbler lock. Unit shall dispense two standard core toilet tissue rolls on each side. Unit shall include four heavy duty, one-piece molded polyethylene spindles. Unit A10 has one side flush with the face of the toilet partition to allow for grab bar clearance.

A-11, Surface Mounted Multi-Roll Toilet Tissue Dispenser: Surface-Mounted Multi-roll toilet tissue dispenser shall be type 304 stainless steel with all welded construction. All exposed surfaces shall have a satin finish. Door shall be one piece seamless construction secured to cabinet and equipped with a tumbler lock. Unit shall dispense two standard core toilet tissue rolls. Extra roll shall automatically drop in place when bottom roll is depleted. Unit shall include two one-piece molded polyethylene spindles.

A-12, Lavatory-Mounted Soap Dispenser: Lavatory mounted soap dispenser shall dispense liquid and lotion soaps, and synthetic detergents. Valve shall be operable with one hand and with less than 5 lbs. of force to comply with barrier free accessibility. Piston and spout assembly shall be type 304 stainless steel with bright polished finish. Escutcheon shall lock to body with concealed locking mechanism that is opened only with special key provided. Spout shall rotate 360 deg without damage to valve mechanism. Piston, spout, and supply tube assembly shall be removable from top for filling and maintenance. Valve shall be equipped with plastic cylinder, stainless steel spring, U-packing seal and duckbills. Shank shall accommodate mounting thickness up to 1 inch. Translucent, shatter resistant polyethylene container shall have a capacity of 20 oz.

A-13, Surface Stainless Steel Utility Hook: Utility Hook shall be constructed entirely of type 304 stainless steel with satin finish. Flange and support arm shall be equipped with a concealed, mounting bracket secured to a wall plate with a stainless steel set screw. Hook shall be welded to support arm. Fastenings and mounting plates shall be concealed.

A-14, Stainless Steel Grab Bars With Concealed Mounting: Grab bar shall be constructed of type 304 stainless steel with satin finish. It shall have wall thickness of 18 gage and outside diameter of 1 ½ inches. Distance from inside of grab bar to finished wall shall be 1 ½ inches. Flanges shall be 11-gage stainless steel, each shall have 2 holes for attachment to wall. Ends of grab bar shall pass thru flanges and be heliarc welded to form one structural unit. Flange covers shall snap over mounting flange to conceal mounting screws. Grab bar shall comply with ADAAG guidelines for structural strength.

A-15, Stainless Steel Grab Bars With Concealed Mounting: Grab bar shall be constructed of type 304 stainless steel with satin finish. It shall have wall thickness of 18 gage and outside diameter of1 ½ inches. Distance from inside of grab bar to finished wall shall be1 ½ inches. Flanges shall be 11-gage stainless steel, shall have 2 holes for attachment to wall. Ends of grab bar shall pass thru flanges and be heliarc welded to form one structural unit. Flange covers shall snap over mounting flange to conceal mounting screws. Grab bar shall comply with ADAAG guidelines for structural strength.

A-16, Extra Heavy-Duty Shower Curtain Rod or Closet Rod: Unit shall be of type 304 stainless steel, 18-gage, with satin finish. Outside diameter shall be 1 ¼ inches. Flanges shall be 20 gauge stainless steel with satin finish.

A-17, Stainless Steel Curtain Hook: Shower curtain hooks shall be type 304 stainless steel. Hooks shall be usable with curtain rod specified for Item A16. Hooks shall snap open to allow placement on curtain rod.

A-18, Opaque White Vinyl Shower Curtain: Shower curtain shall be opaque, matte white vinyl, 8 mil thick. Curtain shall include nickel-plated grommets along top, one at every 6 inches. Bottom and sides shall be hemmed. Curtain size shall be as needed.

A-19, Recessed Napkin/Tampon Vendor: Recessed sanitary napkin/tampon vendor shall combine two dispensing mechanisms in one cabinet to provide sanitary napkin or tampon at user's option. Dispensing mechanism shall be pre-set for 25 cent operation, but shall be convertible in the field to allow the change of coin denomination without purchasing new mechanism or removing unit from wall. Door shall be furnished with metal plates indicating specified coin denomination. Unit shall be type 304 stainless steel all welded construction. Exposed surfaces shall be satin finish. Flanges shall be drawn, one-piece seamless construction, stainless steel with satin finish. Door shall be drawn, one-piece, seamless construction; secured to cabinet with a full length, stainless steel piano hinge. Door shall be equipped with a steel door swing limiter and concealed tumbler lock. Pull knobs shall be operable with one hand and with less than 5 lb of force. Each coin box shall be equipped with a tumbler lock that is keyed differently than door locks. Units shall not carry brand name advertising.

A-20 Surface-Mounted Napkin/Tampon Vendor: Recessed sanitary napkin/tampon vendor shall combine two dispensing mechanisms in one cabinet to provide sanitary napkin or tampon at user's option. Dispensing mechanism shall be pre-set for 25 cent operation, but shall be convert able in the field to allow the change of coin denomination without purchasing new mechanism or removing unit from wall. Door shall be furnished with metal plates indicating specified coin denomination. Unit shall be type 304 stainless steel all welded construction. Exposed surfaces shall be satin finish. Flanges shall be drawn, one-piece seamless construction, 1/32 inch stainless steel with satin finish. Door shall be drawn, one-piece, seamless construction; secured to cabinet with a full length, stainless steel piano hinge. Door shall be equipped with a steel door swing limiter and concealed tumbler lock. Pull knobs shall be operable with one hand and with

less than 5 lb of force. Each coin box shall be equipped with a tumbler lock that is keyed differently than door locks. Units shall not carry brand name advertising.

A-21 Surface Mounted Soap Dish: Soap dish shall be extra heavy cast bronze; exposed surfaces shall have bright polished chrome-plated finish. Unit shall have fully enclosed back to prevent concealment of contraband. Unit shall be furnished with tamp er resistant mounting screws.

A-22 Folding Shower Seat: Reversible shower seat shall have a frame constructed of type 304, satin finish stainless steel, that consists of square tubing and seamless tubing. Seat shall be one-piece, solid phenolic with matte finish, ivory colored, melamine surfaces, and black phenolic-resin core; secured to frame with stainless steel carriage bolts and acorn nuts. Seats shall be reversible or shall accommodate right or left seating. Shower seats shall be equipped with two mounting flanges constructed of type 304, satin-finish stainless steel; a guide bracket constructed of type 304, satin-finish stainless steel; and a spring constructed of type 301, stainless steel spot welded to a baseplate of type 304 heavy gauge stainless steel. seat shall remain in upright position when not in use. Shower seat shall comply with ADAAG barrier free guidelines

A-23 Surface-Mounted Roll-Paper Towel Dispenser And Receptacle: Roll paper towel dispenser shall be constructed of type 304 stainless steel with all welded construction. Exposed surfaces shall have satin finish. Door shall be secured to cabinet with a full-length stainless steel piano hinge and equipped with a tumbler-lock. Dispenser shall deliver a preset length of towel per stroke of lever and shall accept standard core rolls 8 inches wide. Unit shall accept stub rolls together with a new roll. When stub roll is used up, new roll shall automatically start to dispense. Dispenser lever shall be operable with one hand, without tight grasping, pinching, or twisting of the wrist and with less than 5 lb of force to comply with barrier free accessibility guidelines. Waste receptacle shall be type 304, stainless steel with satin finish with edges hemmed and shall be equipped with interior clips for securing furnished reusable vinyl liner. Waste receptacle shall be secure to cabinet with a tumbler lock and have a capacity of minimum12 gal.

A-24, Surface Mounted Roll Paper Towel Dispenser: Roll paper towel dispenser shall be constructed of type 304 stainless steel with all welded construction. Exposed surfaces shall have satin finish. Door shall be secured to cabinet with a full-length stainless steel piano hinge and equipped with a tumbler-lock and a stainless steel door swing limiter. Dispenser shall deliver a preset length of towel: per stroke of lever and shall accept standard core rolls. Unit shall accept stub rolls together with a new roll. When stub roll is used up, new roll shall automatically start to dispense. Dispenser lever shall be operable with one hand, without tight grasping, pinching, or twisting of the wrist and with less than 5 lb of force to comply with barrier free accessibility guidelines.

A-25 Surface Mounted Waste Receptacle: Waste receptacle shall be type 304, 0stainless steel all welded construction, exposed surfaces to have a satin finish. Waste receptacle shall be equipped with 4 interior hooks, have reinforced mounting screws, and shall be furnished with a heavy-gauge vinyl liner. Unit shall have a capacity of 20 gal.

A-26 Surface-Mounted Multipurpose Unit With Mirror, Paper Towel Dispenser, Shelf and Soap Dispenser: Surface mounted multipurpose unit shall incorporate mirror, paper towel dispenser, shelf, and soap dispenser. Unit shall be type 304, stainless steel all welded construction; exposed surfaces shall have a satin finish. Mirror shall be No. 1 quality. 1/4 inch thick select float glass, copper plated. Polished edges shall be fully protected. Mirror shall have a 15-year guarantee against silver spoilage and shall be mounted in the door secured to the cabinet with a full-length stainless steel piano hinge. Door shall be equipped with a stainless steel swing limiter and concealed tumbler lock. Paper towel dispenser shall a rounded opening with hemmed edges and shall dispense 600 C-fold or 800 multifold paper towels. Soap vessel shall be type 304, stainless steel with a satin finish. Unlocked with a special key provided and slides out for filling. soap dispenser shall have an unbreakable polycarbonate refill indicator window , be vandal resistant and have a capacity of 5 pints. Soap valve shall be operable with one hand and with less than 5 lb of force to comply

with ADAAG barrier free accessibility guidelines. Corrosion resistant valve shall dispense liquid soaps, and synthetic detergents.

A-27 Solid Phenolic Folding Shower Seat: Folding shower seat shall have a frame constructed of type 304, satin finish stainless steel, that consists of square tubing and seamless tubing. Seat shall be one-piece, solid phenolic laminate with matte finish, ivory colored, melamine surfaces, and black phenolic-resin core; secured to frame with stainless steel carriage bolts and acorn nuts. Shower seats shall be equipped with two mounting flanges constructed of type 304, satin-finish stainless steel; a guide bracket constructed of type 304, satin-finish stainless steel; and a spring constructed of type 301, stainless steel spot welded to a baseplate of type 304 heavy gauge stainless steel. Seat shall remain in upright position when not in use. Shower seat shall comply with ADAAG barrier free guidelines

A-28 Recessed Toilet-Seat-Cover And Toilet Tissue Dispenser: Recessed-Mounted Multi-roll toilet tissue dispenser shall be type 304 stainless steel with all welded construction. All exposed surfaces shall have a satin finish. Door shall be one piece seamless construction secured to cabinet and equipped with a tumbler lock. Unit shall dispense two standard core toilet tissue rolls. Extra roll shall automatically drop in place when bottom roll is depleted. Unit shall include two one-piece molded polyethylene spindles. Toilet seat cover dispenser shall hold 8000 paper covers.

A-29 Surface-Mounted Toilet-Seat-Cover And Tissue Dispenser: Surface-Mounted Multi-roll toilet tissue dispenser shall be type 304 stainless steel with all welded construction. All exposed surfaces shall have a satin finish. Door shall be one piece seamless construction secured to cabinet and equipped with a tumbler lock. Unit shall dispense two standard core toilet tissue rolls. Extra roll shall automatically drop in place when bottom roll is depleted. Unit shall include two one-piece molded polyethylene spindles. Toilet seat cover dispenser shall hold 1000 paper covers.

DIVISION 11 - EQUIPMENT

SECTION 11132 - PROJECTION SCREENS

Scope: 1. Provide motorized and manual projection screens for classroom, meeting room, and office applications.

Submittals: 1. Product Data: Manufacturer's descriptive data, performance charts, catalog cuts, and installation instructions

2. Shop Drawings: Shop drawings showing layout and types of projection screens. Show the following:
   a. Location of screen centerline.
   b. Anchorage details.
   c. Accessories.
   d. Frame details for front projection screens.

Quality Assurance: 1. Single Source Responsibility: Obtain each type of projection screen required from a single manufacturer as a complete unit, including necessary mounting hardware and accessories.

2. Coordination of Work: Coordinate layout and installation of projection screens with other construction supported by, or penetrating through partition.

Products: 1. Motorized Projection Screen: Recessed mounted motorized projection screen shall have 120V motor that is lubricated for life, quick reversal type, has overload protector, integral gears, and preset accessible limit switches. Recessed mounted projection screens shall have an operable closure door and access panel.

Screen shall be flame retardant, mildew resistant, and glass beaded or white matte. Bottom of screen fabric shall be weighted with metal rod. Roller shall be a rigid metal at least 3 inch diameter mounted on sound absorbing supports. Motor will be end-mounted design. Screen shall have a 3-position control switch to stop or reverse screen at any point. The switch shall be installed in a flush electrical box with cover plate, location(s) as shown on the electrical drawings. All conduit and wiring from the control switch to the projection screen shall be furnished and installed by the Contractor. Ceiling recessed case shall be extruded aluminum or wood with metal lined motor compartment. . Wood case shall be finished in light oak. Screen shall be UL listed. The size shall be as shown in the drawings.

2. Projection Screen Surfaces:
   a. Measurement of Gain of Screen Viewing Surface: Measure gain of screen viewing surface against that of a magnesium carbonate surface by means of a photogoniometer using test methods to determining effect of reflected light at various viewing angles on screen surfaces. Ratings of 1.0 refer to those viewing surfaces having a reflectivity equal to the magnesium carbonate surface.
   b. Material and Viewing Surface of Front Projection Screens: Obtain screens manufactured from mildew- and flame-resistant fabric of type indicated for each type of screen specified and complying with the following requirements:
      1) Matte white viewing surface with minimum gain characteristics complying with FS GG-S-00172D (1) for Type A screen surface.
      2) Application: Provide matte white surfaces unless otherwise indicated.
      3) Edge Treatment: Without black masking borders.
   c. Mildew Resistance: Provide mildew-resistant screen fabrics as determined by AATCC 30.
   d. Fire Performance Characteristics: Provide projection screen fabrics identical to those materials that have undergone testing and passed requirements for flame resistance as indicated below:
      1) NFPA 701 per small-scale test: Federal Standard 191A/5903.1 for test method.

SECTION 11400 – FOOD SERVICE EQUIPMENT

Scope:
1. Provide food service equipment for the kitchen.

Quality Assurance:
1. Sanitation: Equipment certified for compliance with NSF/ANSI standards by NSF or UL.
2. Bakery Equipment: BISSC-certified.
3. Electric and Fuel-Burning Equipment: UL listed for casualty hazards.
4. Steam Equipment: Complies with ASME Boiler and Pressure Vessel Code.

Warranty:
1. Refrigeration Compressors: Five years.

Materials:
1. NSF certified for end-use application indicated.
2. Elastomeric Joint Sealant: Complies with FDA's regulations for use in food-contact areas.

SECTION 11400X – FOOD SERVICE EQUIPMENT PRODUCTS

Products:

Item No	1	(1 set) required
Item:	Dishtable, soiled	(MCAR)
Manufacturer:	Fabricator	
Model No.	Custom - size and shape as indicated and specified.	
	Provide:	

A. Integral stainless steel scrapping trough 6" wide by 3 1/2" deep at water inlet ends and 5" deep at disposal sink end. Trough to be integrally welded to disposal sink
B. Disposal sink 20" wide x 20" wide x 8" deep. Disposal (item # 4) collar to be welded integrally to disposal sink
C. Hole for vacuum breaker to be mounted through backsplash
D. Hole(s) for pre-rinse assembly (item # 5) through backsplash
E. Bracket for disposal (item #4) controls

Item No 2 (1) required
Item: Silver Soak Sink (OMAR)
Manufacturer: Piper Products Inc
Model No.: 337-3474

STD features:

A. Lever handle drain
B. Stainless steel

Accessories:

A. Silver chute

Item No.: 3 (1) Required
Item: Overhead Rack Shelf, Slanted (MCAR)
Manufacturer: Fabricator
Model No.: Custom - Size And Shape As Indicated And Specified.
Provide:

A. Approximately 62" Long, 21" Wide Minimum, To Accommodate Three 20" X 20" Dishwasher Racks, Wall Mounted

Item No.: 4 (1) Required
Item: Garbage Disposer (MCAR)
Manufacturer: Hobart
Model No.: FD3-300-D-2 (208/60/3)

STD Features:

A Dual directional grinding
B. Hardened and replaceable stainless steel cutter blocks

Accessories:

A. Group D accessories, includes nitrite rubber silver-saver splash guard ring, 7" I.D. stainless steel weld-in adapter for sink, fixed direction water inlet for sink and vacuum breaker
B. Group 2 electric control includes magnetic contactors, pushbutton start and stop automatic reversing, NEMA 12 enclosure and solenoid valve

Item No.: 5 (3) Required

Item: Pre-Rinse Spray Assembly (MCAR)
Manufacturer: T & S Brass And Bronze Work
Model No.: B-0113

Std Features:

A. Center Backsplash Mounted Faucet
B. 18" Riser
C. Spray Valve
D. Finger Hook
E. 34" Stainless Steel Hose Length

Accessories:

A. Wall Bracket
B. Vacuum Breaker

Item No.: 6 (1) Required
Item: Condensing Hood (MCAR)
For Dishwasher Item # 7
(See Mechanical Drawings And Specifications)
Manufacturer: Greenheck
Model No.: GC

Std Features:

A. Removable Condensate Baffles
B. Full Perimeter Welded Gutter
C. Stainless Steel Drain
D. All 18 Gauge Stainless Steel Construction

Accessories:

A. None

Item No.: 7 (1) Required
Item: Dishwasher (MCAR)
Manufacturer: Hobart
Model No.: Am-14

Std Features:

A. Electric Immersion Heat
B. Led Displays (Fill, Wash, Rinse) And Temperature
C. Low Water Consumption -1.2 Gallons Per Rack
D. 1 H.P. Magnetically Controlled Motor
E. Stainless Steel
F. Straight-Through Operation With Third Door For Inspection
G. Features Flexible Timing For Special Applications

Accessories:

A. Five Each Heavy Duty All-Plastic Peg Compartment Rack, 20" X 20"
B. Five Each Heavy Duty All-Plastic Combination Rack, 20" X 20"

Item No.: 8 (1) Required
Item: Booster Heater (MCAR)
For Dishwasher Item # 7
Manufacturer: Hatco
Model No.: #C-12

STD Features:

A. "Pilot Light"
B. On And Off Switch
C. Low Water Cut-Off
D. Heating Capacity 120 gph for 40-Degree F Temperature Rise
E. 6 Gallon Storage Capacity

Accessories:

A. All Stainless Steel Body And Base
B. 6" To 7 1/2" Adjustable Stainless Steel Legs

Item No.: 9 (1) Required
Em: Overhead Shelf, Flat (MCAR)
Manufacturer: Fabricator
Model No.: Custom - Size And Shape As Indicated And Specified.
Provide:

A. Approximately 42" Long, 21" Wide
B. Wall Mounted

Item No.: 10 (1 Set) Required
Item: Clean Dishtable (MCAR)
Manufacturer: Fabricator
Model No.: Custom - Size And Shape As Indicated And Specified.

Item No.: 11 (2) Required
Item: Hand Sink (MCAR)
(See Plumbing Specifications)
Manufacturer:
Model No.:

Std Features:

A. Stainless Steel Sink
B. Wrist Action Faucet

Accessories:

A. Soap And Towel Dispenser With Mirror (See Toilet Accessory Section)

Item No.: 12 (3) Required
Item: Air Curtain (MCAR)
Manufacturer: Mars
Model No.: 42C

Std Features:

A. Wall Mounted Control Panel For One (1) Motor, Mounted On Wall Right Of Door
B. White Finish

Accessories:

None

Item No.: 13 (1) Required
Item: Can Wash (MCAR)
(See Civil And Plumbing Drawings)
Manufacturer:
Model No.: Custom - Size And Shape As Indicated And Specified.

Item No.: 14 (1) Required
Item: Booster Heater (MCAR)
For 3-Compartment Sink Item # 17
Manufacturer: Hatco
Model No.: #C-15

Std Features:

A. "Pilot Light"
B. On And Off Switch
C. Low Water Cut-Off
D. Heating Capacity 151 gph For 40-Degree F Temperature Rise
E. 6 Gallon Storage Capacity

Accessories:

A. All Stainless Steel Body And Base
B. 6" To 8" Adjustable Stainless Steel Legs

Item No.: 15 (1) Required
Item: Sanitizing Sink Heater (MCAR)
For 3-Compartment Sink Item # 17
Manufacturer: Hatco
Model No.: 3CS-9

STD Features:

A. On And Off Switch With Indicating Light
B. Energy Cut-Off Wired Into The Electrical Circuit
C. Dual Reservoir System
D. Side Drain
E. Sanitizing Temperature Indicator
F. Low Water Light
G. Balanced 3-Phase Electrical Power

Accessories:

A. All Stainless Steel Body And Base
B. Rinse Temperature Monitor

Note:

A. Mounted Under Rinse Compartment Of 3-Compartment Sink, Item # 17

Item No. 16 (1 Set) Required
Item: Condensing Hood (MCAR)
For 3-Compartment Sink, Item # 17
(See Mechanical Drawings And Specifications)
Manufacturer: Greenheck
Model No.: GC

STD Features:

A. Removable Condensate Baffles
B. Full Perimeter Welded Gutter
C. Stainless Steel Drain
D. All 18 Gauge Stainless Steel Construction

Accessories:

None

Item No. 17 (1 Set) Required
Item: Sink, 3-Compartment (MCAR)
Manufacturer: Fabricator
Model No.: Custom - Size And Shape As Indicated And Specified.
Provide:

A. Bracket For Disposal (Item #18) Controls
B. Disposal Cone Sink (Accessory With Item #18) Integrally Welded To Drainboard
C. Holes For Pre-Rinse Assembly (Item # 5) And Vacuum Breaker In Backsplash
D. Two Faucets (See Plumbing Specification)
E. Drain Assembly Each Compartment
F. Hot Tap Faucet At Rinse Compartment (See Plumbing Specification)
G. I.D. Plate "Warning 180-Degree F Water" Mounted On Backsplash At Rinse Compartment

Item No.: 18 (1) Required
Item: Garbage Disposer (MCAR)
For 3-Compartment Sink Item # 17
Manufacturer: Hobart
Model No.: FD3-300-B-2 (208/60/3)

STD Features:

A. Dual Directional Grinding
B. Hardened And Replaceable Stainless Steel Cutter Blocks

Accessories:

A. Cone Sink 15" I.D. With Hole For Water Swirl Inlet
B. Group B Accessories Includes Nitrite Rubber Silver-Saver Splash Guard Ring, Water Swirl And Vacuum Breaker

C. Group 2 Electric Control Includes Magnetic Contactors, Pushbutton Start And Stop Automatic Reversing, NEMA 12 Enclosure And Solenoid Valve

Item No.: 19 (1) Required
Item: Warming Cabinet (OMAR)
Manufacturer: Alto-Sham
Model No.: 1000-Up Series

Std Features:

A. Two On/Off Adjustable Thermostats 60-200-Degree F, One For Each Compartment
B. Two Holding Temperature Gauges To Monitor
C. Two Chrome Plated Side Racks Designed To Accommodate Standard Full Size Pans
D. Three Chrome Plated Wire Shelves For Full Size Sheet Pans
E. Halo Heat System
F. All Stainless Steel Construction
G. Two Indicator Lights
H. Double Compartment Holding Cabinet
I. One Set Of 5" Heavy Duty Casters With Brakes

Accessories:

None

Item No.: 20 (1) Required
Item: Mixer (OMAR)
Manufacturer: Hobart
Model No.: A-200-DT

Std Features:

A. Stainless Steel Bowl Guard
B. 1/2 H.P. Motor
C. 15-Minute Timer
D. Three Fixed Speeds
E. 20 Quart Stainless Steel Bowl
F. Flat "B" Beater
G. "D" Wire Loop Whip
H. 6' Cord And Plug

Accessories:

A. Deluxe Finish

Item No.: 21 (1) Required
Item: Mixer Stand (OMAR)
For Mixer Item # 20
Manufacturer: Piper Products Inc
Model No.: MX-29-TSS

Std Features:

A. Stainless Steel Undershelf
B. Stainless Steel Legs

Accessories:

A. MX-52-R Stainless Steel Accessory Rack
B. Modify Stainless Steel Leg With Bullet Feet #331-3429

Item No.:	22	(1) Required
Item:	Convection Oven	(MCAR)
Manufacturer:	Vulcan-Hart	
Model No.:	VC66GD	

Std Features:

A. Double Section, Deep Depth Gas Convection Ovens
B. Stainless Steel Front And Legs
C. Adjustable Feet
D. Independently Operated Stainless Steel 180-Degree-Swing Doors With Windows, 2(Two) Per Section
E. 44,000 Btu/H Burner Per Section; 88,000 Btu/H Total Input
F. Electronic Spark Igniters
G. 1/2 Hp Two Speed Oven Blower-Motor Per Section, 115/60/1
H. Front, Side Mounted Solid State Temperature Controls; Range 150 To 500-Degrees F
I. 60-Minute Timer With Audible Alarm
J. Auxiliary Fan Switch For Rapid Cool Down
K. Two Interior Oven Lights Per Section
L. Cool Touch Door Handles
M. Stainless Steel Oven Door Gaskets
N. Eleven-Position Nickel Plated Rack Guides With Positive Racks Tops Per Oven
O. Five Heavy Duty Nickel Plated Racks Per Oven
Q. Single 3/4" Gas Connection With Manual Shut-Off Valve And Regulator

Accessories:

A. Stainless Steel Drip Pans
B. Stainless Steel Interior
C. Stainless Steel Sides And Top
D. Stainless Steel Rear Body Enclosure Panel

Item No.:	23	(1) Required
Item:	Range With Oven	(MCAR)
Manufacturer:	Vulcan-Hart	
Model No.:	GH45	

Std Features:

A. Heavy Duty Four Burner Gas Range With Standard Oven
B. Stainless Steel Front
C. Stainless Steel Front Top Ledge
D. 6" Stainless Steel Adjustable Legs With Bullet Feet
E. 1 1/4" Diameter Front Gas Manifold
F. Four 30,000 Btu/H Heavy Cast Two Piece "Flame Retention" Burners With Individual Pilots And Control Valves
G. Heavy Cast Iron Aeration Plates With Deep Bowls And Removable Cast Top Grates
H. Oven Controls Located In Cool Zone

I. Oven Is Porcelain Enamel On Steel Hearth, Door And Side Liners, 26" W X 28" D X 14" H
J. One Oven Rack
K. Two Rack Positions
L. 50,000 Btu/H Heavy Cast "Flame Retention" Burner With Electronic Pilot Ignition
M. Oven Temperature Range: 150 to 500-Degrees F

Accessories:

A. Stainless Steel Sides
B. 3/4" Rear Gas Connection
C. "BG" Series 17" High Stainless Steel Backguard

Item No.:	24	(1) Required
Item:	Steam Jacketed Kettle	(MCAR)
Manufacturer:	Cleveland Range Inc	
Model No.:	KGT-12-T	

STD Features:

A. 12 Gallon Self Contained Gas Tilting Kettle
B. Temperature Range: 145 to 260-Degree F
C. "Splash Proof" Solid State Control Panel For Temperature, Low Water And Power On/Off Switch With L.E.D. Indicators For Heat Cycle And Low Water Warning
D. Kettle And All Exterior Surfaces Stainless Steel With #4 Finish
E. Energy Efficient (65%), High Performance Gas-Fired Heating System For Fast Heat Up And Recovery Time, 53,000 Btu Firing Rate And 34,5000 Btu Directly Applied To The Product
F. Gas Pressure Regulator
G. Self Locking Marine-Type Tilting Mechanism With Balanced Design For Easy Tilting, Tile Handle Mounted At Right, Double Safety Gas Shut Off Turns Off Gas When Unit Is Tilted
H. Large Heavy Duty, Rolled Rim Pouring Lip
I. "Splash Proof" Recessed Pressure/Vacuum Gauge
J. Steam Jacket Permanently Filled With Treated Distilled Water (Venting And/Or Refilling Not Required), 50 psi Steam Jacket Rating With Safety Valve Mounted Toward The Rear Of Kettle
K. Automatic Electronic Spark Ignition System
L. Hinged Stainless Steel Door
M. 6' Cord And Plug, 5 Amps

Accessories:

A. Model Number St-28 Equipment Stand - All Stainless Steel Construction With Removable Sliding Combination Drain Drawer (With Splash Shield) And Pan Supports, 1 1/4" Square Tubing, Adjustable Feet (Rear Feet With Flange)
B. Hot And Cold Water Faucet (DPK) With Bracket (FBKT)
C. 316 Stainless Steel Liner (316g)
D. Lift Off Cover (CL)
E. Self Locking Hand Tilt Mechanism (HTK)
F. Kettle Markings (KM)

Item No.:	25	(1) Required
Item:	Braising Pan	(MCAR)
Manufacturer:	Vulcan-Hart	
Model No.:	VG40	

Std Features:

A. 40 Gallon Gas Tilting Braising Pan
B. One 30,000 Btu/H Burner Per Each 12" Pan Width, 120,000 Btu/H Total Input
C. Burners Shut Off When Pan Is Tilted 5-Degrees
D. Pan May Be Fully Tilted So Pan May Be Emptied Completely
E. Pan Body 14 Gauge Stainless Steel, Front Hinged, Interior Coved Bottom And Corners With Etched Gallon Markings
F. Cooking Surface Stainless Steel Bonded To 1/2" Thick Carbon Steel Plate
G. Full Width Front Type Formed Pouring Lip Flanged 4" On Both Sides With Removable Pouring Lip Strainer
H. Drop Away Food Pan Receiving Support Mounts Under Pouring Lip.
I. Stainless Stell Spring Assist One Piece Cover With Full Width Handle And Full Width Rear Drip Lip, Lift Assist Will Hold Cover Open At Any Position, Condensate Lip On Cover To Reduce Drip
J. Water Tight Controls And Enclosures
K. Manually Operated Pan Tilting Mechanism With Full Width Stainless Steel Bar Folding Swing-Away Handle
L. Electronic Ignition System For Automatic Burner Light
M. 60-Minute Timer
N. On/Off Lighted Rocker Switch
O. One Snap Acting Thermostat Adjustable From 100 To 450-Degrees F
P. 3/4" Rear Gas Connection And Gas Pressure Regulator
Q. Based Enclosed By Lift Off Panels, Box Type Construction
R. 12" Stainless Steel 2" Diameter Legs With Stainless Steel Adjustable Feet, Feet Flanged
S. Exposed Exterior Stainless Steel
T. CSA Design Certified, Classified By UL To NSF STD. # 4
U. 6' Cord And Plug, 120/60/1, 3 Amps

Accessories:

A. 12" Double Jointed Double Jpantry Faucet

Item No.: 26 (1) Required
Item: Drain Trough (MCAR)
(See Plumbing Specifications)
Manufacturer:
Model No.:

Item No.: 27 (1) Required
Item: Hood Over Cooking Area (MCAR)
For Convection Oven Item # 22,
Range W/ Oven Item # 23,
Tilting Kettle Item # 24,
And Braising Pan Item # 25
(See Mechanical Drawings And Specifications)
Manufacturer: Greenheck
Model No.: GHAW

STD Features:

A. UL Listed Full Compensating Exhaust Hood With Air Curtain Supply
B. UL Listed Vaporproof Incandescent Lights

C. Fire Damper In Supply Duct Collar
D. Full Length Grease Trough With Removable Grease Container
E. Size As Indicated

Accessories:

A. All 16 Gauge Stainless Steel Construction
B. Stainless Steel Baffle-Type Removable Grease Filters
C. Water Fire Suppression System

Item No.: 28 (2) Required
Item: Work Table, Mobile (OMAR)
Manufacturer Fabricator
Model No.: Custom - Size And Shape As Indicated And Specified.
Provide:

A. Four 5" Diameter Non-Marking, Ball Bearing, Stem-Type Casters
B. Two Casters With Locking Brakes
C. 20" X 20" X 5" Deep Stainless Steel Drawer With Removable Inset

Item No.: 29 (1) Required
Item: Hot Food Well (OMAR)
Manufacturer: Servolift/Eastern Steel
Model No.: 501-4

STD Features:

A. 900 Watt Heating System For Each Food Pan Well With Adjustable Control Thermostat With "Off" Position And Neon Pilot Light
B. Four 5" Diameter, Heavy Duty, Double Ball Bearing Swivel Casters With Non-Marking Rubber Tires
C. Two Casters With Brakes
D. Removable 5 Foot Cord And Plug Set
E. 10" Aluminum Front And End Aprons With Factory Bonded Vinyl Fabric (Color Selection Below)

Accessories:

A. Food Protector, "Code FP"
B. Food Wells With Individual Drains Manifolded To One 3/4" Drain Valve
C. Cam-Action Latches With Trigger Release (Used To Join Multiple Units Together)
D. Front And End Apron Color - Neutra

Item No.: 30 (1) Required
Item: Cold Food Unit (OMAR)
Manufacturer: Servolift/Eastern Steel
Model No.: 502-3RCW

STD Features:

A. Cold Wall Food Unit
B. Four 5" Diameter, Heavy Duty, Double Ball Bearing Swivel Casters With Non-Marking Rubber Tires

C. Two Casters With Brakes
D. Mechanical Refrigeration
E. NEMA 5-15p Plug With 5 Foot Three-Wire Cord UL Listed
F. 1/2" Stainless Steel Drain With Shut-Off Valve
G. 10" Aluminum Front And End Aprons With Factory Bonded Vinyl Fabric (Color Selection Below)

Accessories:

A. Display Case, Double Deck, "Code DC"
B. Cam-Action Latches With Trigger Release (Used To Join Multiple Units Together)
C. Front And End Apron Color - Neutra

Item No.:	31	(1) Required
Item:	Slicer	(Omar)
Manufacturer:	Hobart	
Model No.:	2712	

Std Features:

A. Two Speed Automatic Carriage Slicer With Front Mounted Controls And Removable Tilting Carriage System
B. Two Speed Carriage Drive 52 Strokes Per Minute For High Speed; 36 Strokes Per Minute For Slow Speed
C. Contoured Cast Stainless Steel "Stay Sharp" Knife With Sanitary Hub
D. Antimicrobial Product Protection
E. Capacity Up To 12" Wide Or 7 1/2" Diameter
F. Adjustable Stainless Steel Fence
G. Lifetime Guaranteed, Top Mounted Removable And Submersible Borazon Stone Sharpener
H. Double-Action Indexing Cam
I. Permanently Mounted Knife Ring Guard
J. Heavy Gauge Stainless Steel Top Cover With Integrated Product Deflector
K. Lift Lever
L. Removable Rear Deflector
M. Electroless Nickel Plated Single Slide Rod With Reservoir Wick
N. Stainless Steel Carriage, Gauge Plate And Knife Cover
O. Ergonomic Style Handle
P. Gauge Plate With Stainless Steel Ribbed Face
Q. Low Fence
R. Sanitary Burnished Aluminum Base
S. No Tools Required For Proper Cleaning
T. 1/2 Hp Permanently Lubricated Ball Bearing Knife Drive Motor, Single Phase Capacitor-Start, Induction Run
U. Nylon Carriage Roller
V. Hobart Poly V-Belt Knife Drive, Runs At 400 Rpm For Optimal Performance
W. Warranty - All Parts And Service For One Year Including Knife
X. 6 Foot Three-Wired Cord And Plug

Accessories:

None

Item No.:	32	(1) Required

Item: Table, Food Preparation (OMAR)
With Pot & Pan Rack
Manufacturer: Fabricator
Model No.: Custom - Size And Shape As Indicated And Specified.
Provide:

A. Cantilever 2-Bar Stainless Steel Pot Rack
B. Pot Rack Constructed Of 2" X 1/4" Stainless Steel Bars Welded To Its Uprights
C. Pot Rack With Double Point Stainless Steel Sliding Hooks 1 Per Approximately Every 8"
D. Pot Rack Supported By 1 5/8" O.D. 16 Gauge Stainless Steel Uprights
E. Uprights To Extend Through Stainless Steel Gussets And Opening In The Table Top
F. 20" X 20" X 5" Deep Stainless Steel Drawer With Removable Inset
G. Stainless Steel Undershelf

Item No.: 33 (1) Required
Item: Can Opener (OMAR)
Manufacturer: Edlund
Model No.:270

Std Features:

A. Removable Knife And Knife Holder (No Tools Required)
B. Gear And Shield Designed To Prevent Splash-Back From Entering Interior (Removable Without Tools)
C. Heavy Duty Stainless Steel Construction
D. Two-Speed Motor
E. High Volume Capacity
F. Weighted And Balanced To Lift Heaviest # 10 Can
G. UL Listed
H. NSF Certified
I. 120/60/1, 1.2 Amps

Accessories:

A. None

Item No.: 34 (2) Required
Item: Refrigerator (OMAR)
Manufacturer: Traulsen
Model No.: RHT232WUT-FHS

Std Features:

A. Stainless Steel Front Housing, Ends And Doors
B. Stainless Steel Interior
C. Three Chrome Plated Adjustable Shelves Supported On Shelf Studs Per Section
D. Exterior Digital Thermometer
E. 10-Foot Three-Wire Cord And Plug
F. Self Closing Full Length Doors W/ Stay Open At 120 Degrees
G. 5 Year Compressor Warranty
H. Guaranteed For Life Cam Hinges
I. Guaranteed For Life Horizontal Work Flow Door Handle
J. Automatically Activated Incandescent Lights

K. Stainless Steel Breaker Cups

Accessories:

A. 6" Adjustable Stainless Steel Legs And Feet

Item No.:	35	(1) Required
Item:	Freezer	(OMAR)
Manufacturer:	Traulsen	
Model No.:	RLT132WUT-FHS	

Std Features:

A. Stainless Steel Front Housing, Ends And Doors
B. Stainless Steel Interior
C. Three Heavy Duty Chrome-Plated Wire Shelves Per Section
D. Exterior Digital Thermometer
E. Condensing Unit On Top W/Automatic Non-Electric Condensate Disposal
F. R404A Refrigerant
G. 10-Foot Three-Wire Cord And Plug
H. 6" Adjustable Legs With Stainless Steel Feet
I. Standard Operating Temperature (0 To -5 Degrees F)
J. Full Height, Self Closing Doors W/Stay Open Feature
K. Automatic Activated Incandescent Lights

Accessories:

A. 6" Adjustable Legs With Stainless Steel Feet

Item No.:	36	(1) Required
Item:	Ice Machine	(MCAR)
Manufacturer:	Manitowoc Ice Inc	
Model No.:	Q-Model Seriec 450, #QD-0452A	

Std Features:

A. Dice Cube Size, 380 Lbs/24hr
B. Air Cooled
C. R404A Refrigerant
D. 3/4 H.P. Compressor
E. Stainless Steel Finish

Accessories:

A. S-400 Stainless Steel Bin With Polyethylene Seamless Bin Liner

Item No.:	37	(3) Required
Item:	Mobile Rack	(OMAR)
Manufacturer:	Cres Cor	
Model No.:	100-1841C	

Std Features:

A. Multi-Purpose Storage Cabinets Of Non-Corrosive Aluminum
B. Full Length Reinforced Door Swings 270-Degrees

C. Card Clip Included To Latch Door To Side Of Cabinet
D. Holds 18" X 26" Pan On 1 1/2" Centers
E. Heavy Duty 5" Swivel Casters With Neoprene Tires; Bearings Sealed And Permanently Lubricated
F. Front Casters With Brakes

Accessories:

A. One Piece Wrap Around, Reinforced, Non-Marking Rubber Bumper, Adds 2" To Width And Depth, Model Number 1405-0000

Item No.: 38 (5) Required
Item: Shelving (OMAR)
Manufacturer: Servolift/Eastern Steel
Model No.: Series 80-S

Std Features:

A. Approximate Size: 42" L X 18" W X 64" H
B. Two "Free Standing" Units And Three "Add On" Units Required
C. Angle Bearer Clips (Used To Connect Multiple Sections)
D. 18 Gauge Stainless Steel Solid-Style Shelves, Five Per Each Unit
E. Shelves With 1 1/4" High Stop Ledge On Rear
F. Adjustable Sanitary Bullet Feet

Accessories:

A. 1" O.D. Stainless Steel Uprights With Top Caps

Item No.: 39 (1 Set) Required
Item: Vegetable Sink (MCAR)
Manufacturer: Fabricator
Model No.: Custom - Size And Shape As Indicated And Specified.
Provide:

A. One Faucet (See Plumbing Specification)
B. Drain Assembly Each Compartment
C. Goose-Neck Spray Assembly With Wall Brace, See Item # 5

Item No.: 40 (2) Required
Item: Tray Busing Rack, Double (OMAR)
Manufacturer: Cres Cor
Model No.: 2213-1824 (See Notes)

STD Features:

A. Approximate Size: (42" W X 30" D X 69 1/2" H
B. Tray Bussing Rack Of Non-Corrosive Aluminum
C. Extruded Channels Riveted In Place And Spaced 5 1/8" On Center
D. Channels Designed To Securely Hold Tray Top And Bottom (Tray Will Not Tip If Half Way Out Of The Channel)
E. Heavy Duty 5" Swivel Casters With Neoprene Tires; Bearings Sealed And Permanently Lubricated

F. Front Casters With Brakes

Accessories:

A. Side Enclosures
B. Back Enclosure
C. Bottom Enclosure
D. One Piece Wrap Around, Reinforced, Non-Marking Rubber Bumper, Adds 2" To Width And Depth

Notes:

A. Verify Tray Size With Contracting Officer Before Ordering Item To Ensure Correct Model Number Is Ordered
B. Item Shall Be From The Same Manufacturer As Item # 44 Dispenser, Cup And Glass, And Item # 45 Dispenser, Silverware/Tray, With The Same Construction And Styling

Designer Note: Verify Tray Size Selected By User With Contracting Officer. A Different Model Number Will Need To Be Selected If Tray Size Does Not Fit This Rack. Designer Will Need To Fill In The Blanks For Std Features "A" And Verify Information In Std Features "C" If Different Model Rack Is To Be Used.

Item No.:	41	(1) Required
Item:	Stainless Steel Tray Slide	(MCAR)
Manufacturer:	Fabricator	
Model No.:	Custom - Size And Shape As Indicated And Specified.	

Provide:

A. Stainless Steel Solid-Style Tray Slide
B. Tray Slide Surface Ribbed

Note:

A. Width Includes Wall/Window Sill Thickness

Item No.:	42	(1) Required
Item:	Coffee Urn	(MCAR)
Manufacturer:	Wilbur Curtis Company Inc	
Model No.:	RU-150	

Std Features:

A. Automatic Coffee Urn, Single Model 3 Gallon Capacity
B. Automatic Refill During Brewing Cycle
C. Thermostatically Controlled For Near-Instant Recovery
D. Closed Lid Brewing
E. Swing-Spray Head
F. Electric Operation
G. Stainless Steel Filter Basket With Hold-Down Flaps
H. Automatic Agitator/Aerator
I. Manual Agitator/Aerator
J. Emergency Refill
K. Brews 13 Gallons Coffee Per Hour
L. UL Listed
M. NSF Approved

N. Hot Water Faucet

Accessories:

A. Double Check Valve
B. Half Brew Cycle
C. Everpure Water Filter
D. Low Water Cut Off Thermostat

Item No.: 43 (1) Required
Item: Drink Stand, W/ Dolly (MCAR)
Manufacturer: Fabricator
Model No.: Custom - Size And Shape As Indicated And Specified.
Provide:

A. Stainless Steel Construction
B. 24" (Approximately) Wide Doors, 1 Pair, Approximately Right 2/3 Width Of Unit
C. 18" (Approximately) Wide Doors, 1 Pair, Approximately Left 1/3 Width Of Unit
D. Full Length Drip Tray Approximately 4" W X 4" D With 1" NPT Drain
E. Open Bottom Right 2/3 Of Unit (Behind Paired 24" Wide Doors)
F. Closed Bottom Left 1/3 Of Unit (Behind Paired 18" Wide Door) With Intermediate Shelf
G. One Each 10" Wide By 5" High Cutout In Back Of Stand (For Access To Electrical Outlet And Plumbing Connections)
H. One Each Stainless Steel Dolly Minimum Of 26" Wide X 26" Deep X 15" High (To Accommodate Five Syrup Tanks) With Four 2" Minimum Diameter Non-Marring Casters
I. Full-Length Solid Ribbed Tray Slide 13" Wide
J. Two Each 1/4" Grommeted Holes For Water Lines Connected To Coffee Urn (Item # 42) And Soda Dispenser (NIC)
K. Two Galvanized Eyelets Rated For 150 Lbs With 1" I.D. Located Inside Unit In Front Left Corner Located To Accommodate Chain For Securing Co2 Tank

Note:

A. Electric Outlet On Wall Above Stand For Coffee Maker Item # 42
B. Electric Outlet On Wall Below Counter Top At Back Of Stand For Soda Dispenser (NIC)
C. Hose Bib On Wall Below Counter Top At Back Of Stand For Water Connections To Coffee Urn #42 And Soda Dispenser (NIC)

Item No.: 44 (3) Required
Item: Dispenser, Cup And Glass (OMAR)
Manufacturer: Servolift
Model No.: ACCA-ST-20 X 20

STD Features:

A. Cantilever Style, Mobile, Adjustable Cup And Dispenser, 23" W X 31" D X 37" H
B. Dispensing Mechanism Raised By A Series Of Coil Springs Attached To The Frame; Ball Bearing Guides And 1 Steel Aircraft Type Cable Keep Rack Carrier Level Even With Uneven Load; Cable Runs Over Pre-Lubricated Plated Steel Pulleys
C. Approximate Capacity: Up To 192 Glasses Or 175 Cups
D. Stainless Steel Tubular Push Handle
E. Frame Is All-Welded Heavy Gauge Steel Finished With Gray Baked Enamel Over Rust-Resisting Undercoat; Mounted On 12 Gauge Stainless Steel "Z" Section Base

F. Body Is 20 Gauge Stainless Steel On All Sides And Top
G. Rack Carrier Is All-Welded 16 Gauge Stainless Steel
H. Front Panel Removable For Adjustment Access

Accessories:

A. Heavy Duty 5" Swivel Double Ball Bearing Casters With Non-Marking Rubber Tires
B. Back Two Casters With Brakes
C. One Piece Wrap Around, Reinforced, Non-Marking Rubber Bumper, Adds 2" To Width And Depth
D. For 20" X 20" Size Dishwasher Racks

Notes:

A. Verify Dishwasher Rack Size With Contracting Officer Before Ordering Item To Ensure Correct Model Number Is Ordered, Especially If The Contractor Substitutes A Different Manufacturer/Model Number Dishwasher Item # 7 Than The Manufacturer/Model Number Listed
B. Item Shall Be From The Same Manufacturer As Item # 40 Tray Busing Rack, Double, And Item # 45, Dispenser, Silverware/Tray, With The Same Construction And Styling.

Item No.:	45	(2) Required
Item:	Dispenser, Silverware/Tray	(OMAR)
Manufacturer:	Servolift	
Model No.:	ATCA-ST-OSW8 Tray Size 14" X 18"	

STD Features:

A. Cantilever Style, Mobile, Adjustable Tray And Silverware Dispenser, 19"W X 29"D X 51"H For Tray Size 14" X 18"
B. Top Mounted Stainless Steel Sloped Overhead-Type Silverware Dispenser, Enclosed On All Four Sides With Eight Openings For Round Silverware Cylinders
C. Dispensing Mechanism Raised By A Series Of Coil Springs Attached To The Frame; Ball Bearing Guides And 1 Steel Aircraft Type Cable Keep Rack Carrier Level Even With Uneven Load; Cable Runs Over Pre-Lubricated Plated Steel Pulleys
D. Approximate Capacity: 100 To 150 Trays, 35 To 40 Pieces Of Silverware Per Cylinder
E. Frame Is All-Welded Heavy Gauge Steel Finished With Gray Baked Enamel Over Rust-Resisting Undercoat; Mounted On 12 Gauge Stainless Steel "Z" Section Base
F. Body Is 20 Gauge Stainless Steel On All Sides And Top
G. Tray Carrier Is All-Welded 16 Gauge Stainless Steel
H. Front Panel Removable Fro Adjustment Access

Accessories:

A. Heavy Duty 5" Swivel Double Ball Bearing Casters With Non-Marking Rubber Tires
B. Back Two Casters With Brakes
C. One Piece Wrap Around, Reinforced, Non-Marking Rubber Bumper, Adds 2" To Width And Depth
D. Eight Nylon Silverware Cylinders

Notes:

A. Verify Tray Size With Contracting Officer Before Ordering Item To Ensure Correct Model Number Is Ordered

B. Item Shall Be From The Same Manufacturer As Item # 40 Tray Busing Rack, Double, And Item # 44, Dispenser, Cup And Glass, With The Same Construction And Styling.

Item No: 46 (1) Required
Item: Glass Filler (MCAR)
Added To Assembly Hall EWC
(See Plumbing Drawings And Specifications)
Manufacturer: T & S Brass And Bronze Works
Model No.: B1225

STD Features:

A. Combination Glass And Pitcher Filler
B. Push Back Glass Filler With Volume Regulator
C. Swing Nozzle For Pitchers

Accessories:

None

Item No.: 47 (1) Required
Item: Make-Up Air Unit (KMAU-1) (MCAR)
And Kitchen Fan (KF-1)
For Hood Item # 27
(See Mechanical Drawings And Specifications)
Manufacturer: Greenheck
Model No.: KSU Arrangement A

STD Features:

A. As Indicated And Specified

Accessories:

A. As Indicated And Specified

SECTION 11450 – RESIDENTIAL EQUIPMENT

Scope: 1. Provide refrigerator and microwaves at break rooms.

References: 1. The publications referenced above (or below) establish minimum requirements for materials, systems and execution which may be specified in this Section.

NATIONAL FIRE PROTECTION ASSOCIATION (NFPA)

NFPA 70 National Electrical Code

UNDERWRITERS LABORATORIES (UL)

UL 250 Household Refrigerators and Freezers
UL 923 Microwave Cooking Appliances

Submittals: 1. Product Data

2. Manufacturer's Instructions

3. Operation and Maintenance Data: Submit operation and maintenance data.

Products: 1. Refrigerator: UL 250, refrigerator with frostproof top freezer, minimum 20 cubic feet, automatic defrosting, two vegetable bottom baskets, four adjustable shelves, two door shelves and minimum 12 egg container in the door, separate interior shelves, multiple door shelves, and door mounted ice and water dispencer. For refrigerator with top freezer, provide reversible (left swing and right swing interchangeable) doors. Provide four fixed rollers or adjustable leg levelers. Refrigerator shall be white.

2. Microwave Oven: UL 923, with black glass window door, minimum 1.5 cubic feet capacity, automatic oven light, browning element, 10 power levels, automatic temperature controllers, minimum two automatic memory levels, digital time controllers, and electronic touch-control panel. Microwave shall be white.

Execution: 1. Installation: Install kitchen equipment in accordance with manufacturers' instructions and NFPA 70.

DIVISION 12 - FURNISHINGS

SECTION 12480 – RUGS AND MATS

Scope: 1. Provide entrance mats for building entrances.

Submittals: 1. Product Data.

2. Samples: color Samples

3. Maintenance Instructions

Product: 1. Floor Mats: Recessed mat shall be equal to Milliken First Appearance, Brush-Off Barrier Free; Color: as selected and as manufactured by Milliken & Company, 201 Lukken Ind. Dr. West, Lagrange, GA 30240, ph; 888-645-6239 or equal

SECTION 12490 - WINDOW TREATMENT

Scope: 1. Provide window coverings.
a. Horizontal Blinds.

References: 1. The publications referenced above (or below) establish minimum requirements for materials, systems and execution which may be specified in this Section.

U.S. GENERAL SERVICES ADMINISTRATION (GSA)

FS AA-V-00200 Venetian Blinds

NATIONAL FIRE PROTECTION ASSOCIATION (NFPA)

NFPA 701 Methods of Fire Tests for Flame-Resistant Textiles and Films

Submittals: 1. Shop Drawings: Drawings showing fabrication and installation details. Drawings shall show layout and locations of track, direction of draw, mounting heights, and details.

2. Product Data: Manufacturer's data composed of catalog cuts, brochures, product information, and maintenance instructions.

4. Samples: Three samples of each type and color of window treatment. Blind slats or louvers shall be 6 inch in length for each color. Track shall be 6 inch in length. Shade material shall be minimum 6 in x 6 in.

Warranty 1. Manufacturer's standard performance guarantees or warranties that extend beyond a 1 year period shall be provided

Products: 1. General: Window treatment shall be provided, complete with necessary brackets, fittings, and hardware. Equipment shall be mounted and operated as indicated. Windows to receive a treatment shall be completely covered. The Contractor shall take measurements at the building and shall be responsible for the proper fitting and hanging of the equipment

2. Horizontal Blinds: Each blind, including hardware, accessory items, mounting brackets and fastenings, shall be provided as a complete unit produced by one manufacturer. All parts shall be one color unless otherwise shown, and match the color of the blind slat. Steel features shall be treated for corrosion resistance.
   a. Horizontal Blinds: Horizontal blinds shall conform to FS AA-V-00200, Type II, 1 inch, except as modified below. Blind units shall be capable of nominally 180 degree partial tilting operation and full-height raising. Blinds shall be inside mount as shown. Tapes for Type I slats shall be longitudinal reinforced vinyl plastic in 1-piece turn ladder construction.
   b. Head Channel and Slats: Head channel shall be steel or aluminum nominal 0.024 inches for Type II. Slats shall be aluminum, not less than 0.008 inches thick, and of sufficient strength to prevent sag or bow in the finished blind. A sufficient amount of slats shall be provided to assure proper control, uniform spacing, and adequate overlap.
   c. Controls: The slats shall be tilted by a transparent tilting wand, hung vertically by its own weight, and shall swivel for easy operation. The tilter control shall be of enclosed construction. Moving parts and mechanical drive shall be made of compatible materials which do not require lubrication during normal expected life. The tilter shall tilt the slats to any desired angle and hold them at that angle so that any vibration or movement of ladders and slats will not drive the tilter and change the angle of slats. A mechanism shall be included to prevent over tightening. The wand shall be of sufficient length to reach to within 60 inches of the floor.
   d. Intermediate Brackets: Intermediate brackets shall be provided for installation of blinds over 48 inches wide and shall be installed as recommended by the manufacturer.

DIVISION 13 - SPECIAL CONSTRUCTION

SECTION 13080 – SOUND, VIBRATION, AND SEISMIC CONTROL

Scope: 1. Seismic. Structural elements for protection of mechanical, electrical and miscellaneous equipment.

References: 1 The publications referenced above (or below) establish minimum requirements for materials, systems and execution which may be specified in this Section.

AMERICAN SOCIETY FOR TESTING AND MATERIALS (ASTM)

ASTM A 36/A 36M	Carbon Structural Steel
ASTM A 53	Pipe, Steel, Black and Hot-Dipped, Zinc-Coated, Welded and Seamless

ASTM A 153/A 153M Zinc Coating (Hot-Dip) on Iron and Steel Hardware
ASTM A 307 Carbon Steel Bolts and Studs, 60,000 PSI Tensile Strength

ASTM A 325 Structural Bolts, Steel, Heat Treated, 120/105 ksi Minimum Tensile Strength
ASTM A 325M High-Strength Bolts for Structural Steel Joints (Metric)
ASTM A 500 Cold-Formed Welded and Seamless Carbon Steel Structural Tubing in Rounds and Shapes
ASTM A 563 Carbon and Alloy Steel Nuts
ASTM A 572/A 572M High-Strength Low-Alloy Columbium-Vanadium Structural Steel
ASTM A 603 Zinc-Coated Steel Structural Wire Rope
ASTM A 653/A 653M Steel Sheet, Zinc-Coated (Galvanized) or Zinc-Iron Alloy-Coated (Galvannealed) by the Hot-Dip Process
ASTM E 488 Strength of Anchors in Concrete and Masonry Elements

ASME INTERNATIONAL (ASME)

ASME B18.2.1 Square and Hex Bolts and Screws (Inch Series)
ASME B18.2.2 Square and Hex Nuts (Inch Series)

System Description: 1. General Requirements: The requirements for seismic protection measures described in this section shall be applied to the mechanical equipment and systems outlined in Section 15070 SEISMIC PROTECTION FOR MECHANICAL EQUIPMENT, the electrical equipment and systems outlined in Section 16070 SEISMIC PROTECTION FOR ELECTRICAL EQUIPMENT, and the miscellaneous equipment and systems listed below. The design for seismic protection shall be based on a Seismic Use Group I building occupancy and on site response coefficients. Resistance to lateral forces induced by earthquakes shall be accomplished without consideration of friction resulting from gravity loads.

2. Miscellaneous Equipment and Systems: The bracing for the following miscellaneous equipment and systems shall be developed by the Contractor in accordance with the requirements of this specification: Storage cabinets, Ornamentations, Storage Racks, Signs and Billboards, Shelving, Furnishings, and Partitions.

Equipment Requirements: 1 Rigidly Mounted Equipment: The equipment to be furnished under this contract shall be constructed and assembled to withstand the seismic forces. For any rigid equipment which is rigidly attached on both sides of a building expansion joint, flexible joints for piping, electrical conduit, etc., that are capable of accommodating displacements equal to the full width of the joint in both orthogonal directions, shall be provided.

2. Nonrigid or Flexibly-Mounted Equipment: The equipment to be furnished under this contract shall be constructed and assembled to resist a horizontal lateral force coefficient times the operating weight of the equipment at the vertical center of gravity of the equipment.

Products: 1. Bolts And Nuts: Squarehead and hexhead bolts, and heavy hexagon nuts, ASME B18.2.1, ASME B18.2.2, or ASTM A325/A325M for bolts and nuts. Bolts and nuts used underground and/or exposed to weather shall be galvanized in accordance with ASTM A153/A153M.

2. Sway Bracing:Material used for members listed in this section, shall be structural steel conforming with the following:
   a. Plates, rods, and rolled shapes, ASTM A36/A36M and ASTM A572/A572M, Grade 50.
   b. Wire rope, ASTM A603

c. Tubes, ASTM A500, Grade B
d. Pipes, ASTM A53, Grade B.
e. Light gauge angles, less than 6 mm (1/4 inch) thickness, ASTM A653/A653M

SECTION 13100 – LIGHTNING PROTECTION

Scope:

1. Provide a complete lightning protection system that conforms to NFPA 70, NFPA 780, UL 96, UL 96A, and UL 467and shall carry a UL master label for the building.

2. The lightning protection system shall consist of air terminals, roof conductors, down conductors, ground connections, and grounds, electrically interconnected to form the shortest distance to ground. All conductors on the structures shall be exposed except where conductors are in protective sleeves exposed on the outside walls. Secondary conductors shall interconnect with grounded metallic parts within the building. Interconnections made within side-flash distances shall be at or above the level of the grounded metallic parts. Items to be interconnected include metallic parts such as metal doors, windows, and gutters.

3. Items to be grounded or bonded:
a. Steel frame buildings.
b. Ramps.
c. Tanks and towers.
d. Metal stacks.
e. Nonmetallic stacks.
f. Post tensioning systems.
g. Interconnection of metal bodies.
h. Fences.
i. Exterior overhead pipe lines.
j. Separately mounted shielding systems “mast type”.
k. Separately mounted shielding systems “overhead ground-wire type”.
l. Metal roofs with metal walls.
m. Metal roofs.

4. The lightning protection system will be inspected by the Contracting Officer to determine conformance with requirements of this Section.

References:

1. The publications referenced above (or below) establish minimum requirements for materials, systems and execution which may be specified in this Section.

NATIONAL FIRE PROTECTION ASSOCIATION (NFPA)

NFPA 70	National Electrical Code
NFPA 780	Installation of Lightning Protection Systems

UNDERWRITERS LABORATORIES (UL)

UL 96	Lightning Protection Components
UL 96A	Installation Requirements for Lightning Protection Systems
UL 467	Grounding and Bonding Equipment

Submittals:

1. Shop Drawings.
2. Certificates of Compliance.

Products:

1. No combination of materials shall be used that forms an electrolytic couple of such nature that corrosion is accelerated in the presence of moisture unless moisture is permanently excluded from the junction of such metals.

2. Conductors shall be in accordance with NFPA 780 and UL 96 for Class I, Class II, or Class II modified materials as applicable.

3. Copper conductors 375 pounds per thousand feet and minimum size wire not less than No. 15 AWG.

4. Copper conductor ribbon or web minimum size of No. 12 AWG.

5. Copper counterpoise minimum size of No. 1/0 AWG.

6. Aluminum strips for minimum size of No. 12 AWG in thickness and at least 1.5" wide.

7. Air terminals shall be in accordance with UL 96 and NFPA 780.

8. Ground Rods: Minimum size of ¾ inch in diameter and 10 feet in length, copper clad steel in accordance with UL 467.

9. Connectors: Clamp-type connectors for splicing conductors shall conform to UL 96, Class as applicable, and Class 2.

10. Bonding plates shall be in accordance with UL 96.

SECTION 13110A – CATHODIC PROTECTION SYSTEM

Scope:

1. Provide a complete, operating, magnesium sacrificial anode, cathodic protection system in complete compliance with NFPA 70, with all applicable Federal, State, and local regulations and with minimum requirements of this contract. The cathodic protection shall be provided on water, fire protection, force main, and gas pipes.

2. Provide the services of a "corrosion expert" to supervise, inspect, and test the installation and performance of the cathodic protection system.

3. The anode system shall be designed for a life of twenty-five (25) years of continuous operation.

4. Provide the following scope of services:
   a. Close-interval potential surveys.
   b. Cathodic Protection Systems.
   c. System testing.
   d. Casing corrosion control.
   e. Interference testing.
   f. Training.
   g. Operating and Maintenance Manual.
   h. Insulator testing and bonding testing.
   i. Coating and holiday testing shall be submitted within 45 days of notice to proceed.

5. Provide a report including potential measurements and a narrative describing how the criteria of protection is achieved without damaging other pipe or structures in the area.

6. Comply with acceptance criteria for determining the adequacy of protection in accordance with NACE.

References: 1. The publications referenced above (or below) establish minimum requirements for materials, systems and execution which may be specified in this Section..

AMERICAN SOCIETY FOR TESTING AND MATERIALS (ASTM)

ASTM B 843	Magnesium Alloy Anodes for Cathodic Protection
ASTM D 1248	Polyethylene Plastics Molding and Extrusion Materials

U.S. NATIONAL ARCHIVES AND RECORDS ADMINISTRATION (NARA)

40 CFR 280	Technical Standards and Corrective Action Requirements for Owners and Operators of Underground Storage Tanks (UST)
49 CFR 192	Transportation of Natural and other Gas by Pipeline: Minimum Federal Safety Standards
49 CFR 195	Transportation of Hazardous Liquids by Pipeline

NACE INTERNATIONAL (NACE)

NACE RP0169	Control of External Corrosion on Underground or Submerged Metallic Piping Systems
NACE RP0177	Mitigation of Alternating Current and Lightning Effects on Metallic Structures and Corrosion Control Systems
NACE RP0188	Discontinuity (Holiday) Testing of Protective Coatings
NACE RP0190	External Protective Coatings for Joints, Fittings, and Valves on Metallic Underground or Submerged Pipelines and Piping Systems
NACE RP0193	External Cathodic Protection of On-Grade Metallic Storage Tank Bottoms
NACE RP0285	Corrosion Control of Underground Storage Tank Systems by Cathodic Protection

NATIONAL ELECTRICAL MANUFACTURERS ASSOCIATION (NEMA)

NEMA TC 2	Electrical Polyvinyl Chloride (PVC) Tubing (EPT) and Conduit (EPC-40 and EPC-80)
NEMA WC 5	Thermoplastic-Insulated Wire and Cable for the Transmission and Distribution of Electrical Energy

NATIONAL FIRE PROTECTION ASSOCIATION (NFPA)

NFPA 70	National Electrical Code

UNDERWRITERS LABORATORIES (UL)

UL 6	Rigid Metal Conduit
UL 510	Polyvinyl Chloride, Polyethylene, and Rubber Insulating Tape
UL 514A	Metallic Outlet Boxes

Submittals:
1. Shop Drawings.
2. Product Data.
3. Test Reports.
4. Certificates of Compliance.
5. Operation and Maintenance Manuals.
6. Training Course.

Products:

1. Magnesium Anodes: Anodes shall be installed on pipes and tanks and shall conform to ASTM B 843.

2. Connecting Wire: Type TW or RHH insulation No. 10 AWG solid copper wire unspliced and not less than 9 ft. – 10 in. long and comply with NFPA 70.

3. Anode Header Cable: Shall comply with NEMA WC 5.

4. Conduits: Shall conform to UL 6 and NEMA TC 2.

5. Test Boxes and Junction Boxes: Boxes shall be outdoor type and conform to UL 514 A.

6. Test Stations: Station shall be above ground or flush-curb-box-type and manufactured by a recognized manufacturer. Test station shall be complete with insulated terminal blocks and lockable cover.

SECTION 13700 – SECURITY ACCESS AND SURVEILLANCE

Scope:

1. The security systems for this project:
   a. A Contractor provided Electronic Security System (ESS) that provides access control and monitoring for the building exterior doors. The Contractor shall provide a complete system including: Central Station Hardware, Software, and Peripherals; Field Processing Hardware, Software, and Peripherals; Interior Control Devices, Balanced Magnetic Switches; Entry Control Devices, Card Readers, Keypads, and Electric Door Strike Control; Enrollment Hardware, Software, and Credential Cards.

References:

1. The publications referenced above (or below) establish minimum requirements for materials, systems and execution which may be specified in this Section.

AMERICAN NATIONAL STANDARDS INSTITUTE (ANSI)

ANSI X3.92	Data Encryption Algorithm
ANSI X3.154	Office Machines and Supplies – Alphanumeric Machines-Keyboard Arrangement

ELECTRONIC INDUSTRIES ALLIANCE (EIA)

EIA ANSI/EIA-310-D	Cabinets, Racks, Panels, and Associated Equipment
EIA ANSI/TIA/EIA-568-B	Commercial Building Telecommunications Cabling Standard

INSTITUTE OF ELECTRICAL AND ELECTRONICS ENGINEERS (IEEE)

IEEE C62.41	Surge Voltages in Low-Voltage AC Power Circuits
IEEE Std 142	IEEE Recommended Practice for Grounding of Industrial and Commercial Power Systems

INTERNATIONAL ORGANIZATION FOR STANDARDIZATION (ISO)

ISO 7810	Identification Cards – Physical Characteristics
ISO 7811-1	Identification Cards – Recording Technique – Part 1: Embossing
ISO 7811-2	Identification Cards – Recording Technique – Part 2: Magnetic Stripe
ISO 7811-3	Identification Cards – Recording Technique – Part 3: Location of Embossed Characters on ID-1 Cards
ISO 7811-4	Identification Cards – Recording Technique – Part 4: Location of Read-Only Magnetic Tracks – Tracks 1 and 2

ISO 7811-5 Identification Cards – Recording Technique – Part 5: Location of Read-Write Magnetic Track – Track 3

NATIONAL ELECTRICAL MANUFACTURERS ASSOCIATION (NEMA)

NEMA 250 Enclosures for Electrical Equipment (1000 Volts Maximum)
NEMA ICS 1 Industrial Control and Systems

NATIONAL FIRE PROTECTION ASSOCIATION (NFPA)

NFPA 70 National Electrical Code

UNDERWRITERS LABORATORIES (UL)

UL 294 Access Control System Units

U.S. NATIONAL ARCHIVES AND RECORDS ADMINISTRATION (NARA)

47 CFR 15 Radio Frequency Devices
47 CFR 68 Connection of Terminal Equipment to the Telephone Network

Submittals:
1. Shop Drawings.
2. Product Data.
3. Test Reports.
4. Certificates of Compliance.
5. Operation and Maintenance Manuals.
6. Training Course.

Products:
1. ESS equipment shall conform to UL 294 and UL 1076.

2. Central Station Equipment: Standard digital computer of modular design with a Pentium IV processor CPU operating speed of at least 3 GHZ.
   a. The computer shall contain at least 40 GHZ hard drive, 1500 rpm speed and DD RAM.
   b. The power supply shall have a minimum capacity of 250 Watts.
   c. A Real Time Clock (RTC) shall be provided. The clock shall continue to function for a period of 1 year without power.
   d. Two EIA ANSI/EIA/TIA-232-F serial ports shall be provided for general use. Sixteen additional EIA ANSI/EIA/TIA-232-F serial ports shall be provided as part of a communications coprocessor. The coprocessor word size shall be 32 bytes or larger and the operating speed of the coprocessor shall be at least 66 MHZ. Multiplexed serial ports shall be expandable to 48 ports. Total buffer size shall be a minimum of 1 megabyte.
   e. An enhanced parallel port shall be provided.
   f. Provide a 17 inch color monitor with a minimum resolution of 1280 by 1024 pixels, noninterlaced, and with a maximum dot pitch of 0.28 millimeters. The video card shall support at least 256 colors at a resolution of 1280 by 1024 at a minimum refresh rate of 70 Hz.
   g. Provide a keyboard having a minimum 64 character, standard ASCII (X3.154) character.
   h. Enhancement hardware such as special function keyboards, special function keys, touch screen devices, or mouse shall be provided for frequently used operator commands such as: Help, Alarm Acknowledge, Place Zone in Access, Place Zone in Secure, System Test, Print Reports, Change Operator, Security Lighting Controls, and Display Graphics.

i. A hard disk with controller having a maximum average access time of 10 milliseconds shall be provided. The hard disk shall provide a minimum of 2.0 gigabytes of formatted storage. Additionally, a PCMCIA slot with a removable 500 megabyte hard drive shall be provided.
j. Provide a standard 3.5 inch high density floppy disk drive and controller.
k. A 4 mm cartridge magnetic tape system shall be provided. The system capacity shall be 8.0 gigabytes minimum per tape.
l. A modem shall be provided and operate at 28,800 bps, full duplex on circuits using asynchronous communications. Modem shall have error detection, auto answer/autodial, and call-in-progress detection. The modem shall meet the requirements of ITU V.34, ITU V.42 for error correction and ITU V.42 for data compression standards, and shall be suitable for operating on unconditioned voice grade telephone lines in conformance with 47 CFR 68.
m. A mouse with a minimum resolution of 400 dots per inch shall be provided.
n. Provide a CD-ROM drive having a nominal storage capacity of 650 megabytes.
o. Provide a dot matrix alarm printer interconnected to the central station equipment.
p. Provide a laser report printer interconnected to the central station equipment.
q. Provide a self contained UPS, suitable for installation and operation at the central station, sized to provide a minimum of 6 hours of operation of the central station equipment.
r. Provide system software that performs the following functions: Support multiuser operation with multiple tasks for each user; Support operation and management of peripheral devices; Provide file management functions for disk I/O, including creation and deletion of files, copying files, a directory of all files including size and location of each sequential and random ordered record; Provide printer spooling; Define and modify each point in the database using operator commands; Annunciate a tamper alarm when unauthorized changes to the system database files are attempted; and Provide the interface between the alarm annunciation and entry control local processors, monitor all sensors and DTS links, operate displays, report alarms, generate reports, and assist in training system operators.
s. Operator's commands shall be full English language words and acronyms selected to allow operators to use the system without extensive training or data processing backgrounds. The system shall supervise operator inputs to ensure they are correct for proper execution. The system shall implement the following enhancements by use of special function keys, touch screen, or mouse, in addition to all other command inputs specified: Help, Acknowledge Alarms, Place Zone in Access, Place Zone in Secure, System Test, Zone Test, Print Reports, Change Operator, and Display Graphics.
t. The system shall provide a means to define system operator capability and functions through multiple, password protected operator levels. At least 3 operator levels shall be provided. System operators and managers with appropriate password clearances shall be able to change operator levels for all operators.
u. This program shall monitor all sensors and local processors and notify the operator of an alarm condition.
v. Entry Control Enrollment Software shall provide database management functions for the system, and shall allow an operator to change and modify the data entered in the system as needed.

3. Field Processing Equipment:
   a. Local processor and sensors shall be powered from an uninterruptible power source. The uninterruptible power source shall provide 6 hours of battery back-up power in the event of primary power failure.
   b. Provide entry control local processors that respond to interrogations from the field device network, recognize and store alarm status inputs until they are transmitted to the central station and change outputs based on commands received from the central station. The entry control local processor shall provide local entry control functions including communicating with field devices such as card readers, keypads, door strikes, magnetic latches, gate and door operators and exit pushbuttons. The processor shall also accept data from entry control field devices as well as database downloads and updates from the central station that include enrollment and privilege information. Local processor inputs shall monitor dry contacts for changes of state that reflect alarm conditions. Local processor outputs shall reflect the state of commands issued by the central station. The entry control local processor shall

provide a degraded mode of operation for periods when communication between the local processor and the field device network is lost.

4. Interior Sensors and Control Devices:
   a. Balanced Magnetic Switch (BMS): The BMS shall detect 0.25 inches of separating relative movement between the magnet and the switch housing. Upon detecting such movement, the BMS shall transmit an alarm signal to the alarm annunciation system.
   b. Entry control card readers shall use unique coded data stored in or on a compatible credential card as an identifier. The Contractor shall furnish card readers to read passive proximity detection entry cards, and the matching credential cards. The card readers shall include an LED or other visual indicator display.

5. Entry control software shall control passage. The decision to grant or deny passage shall be based upon identifier data to be input at a specific location. If all conditions are met, a signal shall be sent to the input device location to activate the appropriate electric strike, bolt, electromagnetic lock or other type of portal release or facility interface device. Entry control operation shall be entirely automatic under control of the central station and local processors.
   a. The system shall be configured for 1000 enrollees. The system shall provide a facility-tailorable reference file database containing personal, access authorization, identifier and verification data for each enrollee as required.
   b. The system shall annunciate an alarm when the following conditions occur: Entry Denial, Portal Open, Bolt Not Engaged, Strike Not Secured, and Alarm Shunting/System Bypass.

Execution:

1. The Contractor shall install all system components, including Government furnished equipment, and appurtenances in accordance with the manufacturer's instructions, IEEE C2, NFPA 70, UL 681, UL 1037, and UL 1076. The Contractor shall furnish necessary interconnections, services, and adjustments required for a complete and operable system as required.

2. The Contractor shall provide personnel, equipment, instrumentation, and supplies necessary to perform site testing. The Government will witness all performance verification and endurance testing. Written permission shall be obtained from the Government before proceeding with the next phase of testing. Original copies of all data produced during predelivery, performance verification and endurance testing, shall be turned over to the Government at the conclusion of each phase of testing, prior to Government approval of the test.

SECTION 13850 – DETECTION AND ALARM

Scope:

1. Provide a complete fire detection alarm system and central reporting system configured in accordance with NFPA 72. The equipment furnished shall be compatible and listed by a nationally recognized testing laboratory in accordance with the applicable NFPA Standards.

2. Qualifications of the Engineer and Technician:
   a. Registered Professional Engineer with verification of experience and at least four (4) years of current experience in the design of the fire protection and detection systems.
   b. National Institute for Certification in Engineering Technologies (NICET) qualifications as an engineering technician in fire alarm systems program with verification of experience and current NICET certificate.
   c. The Registered Professional Engineer may perform all required items under this specification. The NICET Fire Alarm Technician shall perform only the items allowed by the specific category of certification held.

3. Provide the following: NICET Fire Alarm Technicians to perform the installation of the system. A NICET Level 4 Fire Alarm Technician shall supervise the installation of the fire alarm system. NICET Level 2 or higher Fire Alarm Technician shall install and terminate fire alarm devices, cabinets and panels. An electrician or NICET Level 1 Fire Alarm Technician shall install conduit and wire for the fire alarm system. The Fire Alarm Technicians installing the equipment shall be factory trained in the installation, adjustment, testing, and operation of the equipment specified herein an on the drawings.

4. Provide preliminary and acceptance testing in accordance with recommendations of NFPA 72.

5. The system shall be activated into the alarm mode by actuation of any alarm initiating device. Alarm initiating devices shall be connected in accordance with NFPA 72. Alarm notification appliances shall be connected to notification appliance circuits (NAC), Style Z in accordance with NFPA 72. Textual, audible, and visual appliances and systems shall comply with NFPA 72. Fire alarm system components requiring power, except for the control panel power supply, shall operate on 24 volts dc. Addressable system shall be microcomputer based and provide the following features:
   a. Sufficient memory to perform as specified and as shown for addressable system.
   b. Individual identity of each addressable device for the following conditions: alarm; trouble; open; short; and appliances missing/failed remote detector – sensitivity adjustment from the panel for smoke detectors.
   c. Capability of each addressable device being individually disabled or enabled from the panel.
   d. Each SLC shall be sized to provide 40 percent addressable expansion without hardware modifications to the panel.

6. Operating power shall be provided as required by NFPA 70.

7. Battery backup power shall be through use of rechargeable, sealed-type storage batteries and battery charger.

References: 1. The publications referenced above (or below) establish minimum requirements for materials, systems and execution which may be specified in this Section.

AMERICAN NATIONAL STANDARDS INSTITUTE (ANSI)

ANSI S3.41	Audible Emergency Evacuation Signal

INSTITUTE OF ELECTRICAL AND ELECTRONICS ENGINEERS (IEEE)

IEEE C62.41	Surge Voltages in Low-Voltage AC Power Circuits

NATIONAL FIRE PROTECTION ASSOCIATION (NFPA)

NFPA 70	National Electrical Code
NFPA 72	National Fire Alarm Code
NFPA 90A	Installation of Air Conditioning and Ventilating Systems

U.S. NATIONAL ARCHIVES AND RECORDS ADMINISTRATION (NARA)

47 CFR 15	Radio Frequency Devices

UNDERWRITERS LABORATORIES (UL)

UL 1242	Intermediate Metal Conduit

UL 1971	Signaling Devices for the Hearing Impaired
UL 228	Door Closers-Holders, With or Without Integral Smoke Detectors
UL 268	Smoke Detectors for Fire Protective Signaling Systems
UL 268A	Smoke Detectors for Duct Application
UL 38	Manually Actuated Signaling Boxes for Use with Fire-Protective Signaling Systems
UL 464	Audible Signal Appliances
UL 521	Heat Detectors for Fire Protective Signaling Systems
UL 6	Rigid Metal Conduit
UL 632	Electrically-Actuated Transmitters
UL 797	Electrical Metallic Tubing
UL 864	Control Units for Fire Protective Signaling Systems

Submittals:
1. Shop Drawings.
2. Product Data.
3. Test Plan/Reports.
4. Certificates of Compliance.
5. Operation and Maintenance Manuals.

Products:

1. Control Panel: Control panel shall comply with the applicable requirements of UL 864. Panel shall be modular, with prominent identification for LED/LCD's, zones, SLC, controls, meters, fuses, and switches. The LED/LCD displays shall be located on the exterior of the cabinet door or be visible through the cabinet door. Loss of power, including batteries, shall not require the manual reloading of a program. Upon restoration of power, startup shall be automatic, and shall not require any manual operation.

2. Remote Annunciation and Control Panel: Provide panel with an audible appliance that operates in conjunction with the panel integral display and is silenced by a system silence switch on the remote panel. Provide the remote panel with an LED/LCD visual display that provides identification, consisting of the word description and ID number for each device as displayed on the control panel. The remote visual appliance located with the audible appliance shall not be extinguished until the trouble or alarm has been cleared. Locate the panel in the main entrance lobby or as directed by the Authority Having Local Jurisdiction.

3. Battery Charger: Battery charger shall be completely automatic, 24 Vdc.

4. Storage Batteries: Provide 24 Vdc sealed, lead-calcium batteries sized and protected in accordance with NFPA 72 to operate the fire alarm system. Provide substantiating battery calculations for supervisory and alarm power requirements. Ampere-hour requirements for each system component and each panel component. Voltage drop calculations for notification appliance circuits to indicate that sufficient voltage is available for proper appliance operation.

5. Addressable Manual Fire Alarm Stations: Addressable manual fire alarm stations shall conform to the applicable requirements of UL 38. Manual stations shall be connected into signal line circuits.

6. Fire Detecting Devices:
   a. Fire detecting devices shall comply with the applicable requirements of NFPA 72, NFPA 90A, UL 268, UL 268A, and UL 521. Detectors located in concealed locations (above ceiling, raised floors, etc.) shall have a remote visible indicator LED/LCD. All fire alarm initiating devices shall be individually addressable.
   b. Heat detectors shall be designed for detection of fire by fixed temperature, combination fixed temperature and rate-of-rise principle, or rate-compensating principle. Heat detector spacing shall be rated in accordance with UL 521.

c. Smoke detectors shall be designed for detection of abnormal smoke densities. Smoke detectors shall be photoelectric, or projected beam type. Detectors that are to be installed in concealed (above false ceilings, etc.) locations shall be provided with a remote indicator LED/LCD suitable for mounting in a finished, visible location.
d. Duct-mounted photoelectric smoke detectors shall be furnished and installed in accordance with NFPA 90A. Units shall consist of a smoke detector, mounted in a special housing fitted with duct sampling tubes.

7. Audible Notification Appliances:
   a. Audible appliances shall conform to the applicable requirements of UL 464. Devices shall be connected into notification appliance circuits.

8. Visual notification appliances shall conform to the applicable requirements of UL 1971.

9. Fire Detection and Alarm System Peripheral Equipment: Electromagnetic door hold-open devices shall be attached to the walls unless otherwise indicated. Devices shall comply with the appropriate requirements of UL 228. Devices shall operate on 24 volt dc power. Compatible magnetic component shall be attached to the door.

10. Telephonic reporting system transmitters shall be compatible with existing receiving equipment at the Supervising Station and shall comply with applicable requirements of UL 632. Transmitter shall respond to the actuation of the fire alarm control panel and shall be of the electric motor-driven or prewound spring mechanism type; it shall transmit not less than four rounds of code.

11. Special Tools and Spare Parts: Provide software, connecting cables and proprietary equipment, necessary for the maintenance, testing, and reprogramming of the equipment to the Contracting Officer. Two spare fuses of each type and size required shall be furnished. Two percent of the total number of each different type of detector, but not less than two each, shall be furnished.

12. Overvoltage and Surge Protection:
    a. Power Line Surge Protection: All equipment connected to alternating current circuits shall be protected from surges per IEEE C62.41 B3 combination waveform and NFPA 70. Fuses shall not be used for surge protection. The surge protector shall be rated for a maximum let thru voltage of 350 Volts ac (line-to-neutral) and 350 Volts ac (neutral-to-ground).
    b. Low Voltage DC and Signal Line Circuits Surge Protection: All SLC, NAC, and communication cables/conductors shall have surge protection installed at each point where it exits or enters a building. Equipment shall be protected from surges per IEEE C62.41 B3 combination waveform and NFPA 70. The surge protector shall be rated to protect the 24 Volt dc equipment. The maximum dc clamping voltages shall be 36 V (line-to-ground) and 72 Volt dc (line-to-line).

13. Conduit: Conduit and fittings shall comply with NFPA 70, UL 6, UL 1242, and UL 797.

14. Wiring: Wiring shall conform to NFPA 70.

Execution: 1. Testing:
   a. Test Plan: Provide a test plan that incorporates preliminary and final testing procedures, equipment, personnel and schedule. Submit test plan to the Contracting Officer for approval a minimum of 30 days prior to start of preliminary testing. Notify the Contracting Officer at least 10 days before the preliminary and acceptance tests are to be conducted. The tests shall be performed in accordance with the approved test procedures in the presence of the Contracting Officer. The control panel manufacturer's representative shall be present to supervise tests. The Contractor shall furnish instruments and personnel required for the tests.

b. Preliminary Tests: Upon completion of the installation, subject the system to functional and operational performance tests including tests of each installed initiating and notification appliance. Provide testing as required to complete the Certificate of Completion IAW NFPA 72. If deficiencies are found, corrections shall be made and the system shall be retested to assure that it is functional. After completing the preliminary testing the Contractor shall complete and submit the NFPA 72, Certificate of Completion.

c. Acceptance Test: Acceptance testing shall not be performed until the Contractor has completed and submitted the Certificate of Completion. Testing shall be in accordance with NFPA 72. The recommended tests in NFPA 72 shall be considered mandatory and shall verify that previous deficiencies have been corrected. The Contractor shall complete and submit the NFPA 72, Inspection and Testing Form.

2. Training: Training course shall be provided for the operations and maintenance staff. The course shall be conducted in the building where the system is installed or as designated by the Contracting Officer. The training period for systems operation and maintenance shall consist of 1 8-hour training day and shall start after the system is functionally completed but prior to final acceptance tests. The instructions shall cover items contained in the operating and maintenance instructions. In addition, training shall be provided on performance of expansions or modifications to the fire detection and alarm system.

SECTION 13920 – FIRE PUMPS

Scope: 1. Provide fire pump associated with fire suppression system.

2. Division 15070: Mechanical Seismic Control Section applies to work of this Section.

References: 1. The publications referenced above (or below) establish minimum requirements for materials, systems and execution which may be specified in this Section.

FACTORY MUTUAL ENGINEERING AND RESEARCH (FM)

FM P7825a	Approval Guide Fire Protection
FM P7825b	Approval Guide Electrical Equipment

NATIONAL FIRE PROTECTION ASSOCIATION (NFPA)

NFPA 20	Installation of Centrifugal Fire Pumps

NATIONAL INSTITUTE FOR CERTIFICATION IN ENGINEERING TECHNOLOGIES (NICET)

NICET 1014-7	Program Detail Manual for Certification in the Field of Fire Protection Engineering (Field Code 003) Subfield of Automatic Sprinkler System Layout

UNDERWRITERS LABORATORIES (UL)

UL 448	Pumps for Fire-Protection Service

Submittals: 1. Shop Drawings: Detail equipment assemblies and indicate dimensions, weights, loads, required clearances, methods of field assembly, components, and location and size of each field connection for each fire-pump and pressure-maintenance-pump unit.

2. Product Data: Submit manufacturer's technical product data, including current accurate pump characteristic performance curves with selection points clearly indicated, weights, furnished specialties and accessories, and installation and start-up instructions.

3. Wiring Diagrams: Submit manufacturer's electrical requirements for power supply wiring to fire pumps. Submit manufacturer's ladder-type wiring diagrams for interlock and control wiring. Clearly differentiate between portions of wiring that are factory-installed and portions to be field installed.

4. Field Test Reports: Indicate and interpret test results for compliance with performance requirements.

5. Maintenance Data: Submit maintenance data and parts list for each fire pump, driver, control, and accessory; including "trouble-shooting" maintenance guide. Include this data, product data, shop drawings, and wiring diagrams in maintenance manual.

6. Operation and Maintenance Manuals.

Training: 1. Manufacturer's representative shall conduct training course for operating and maintenance personnel.

Products: 1. Proprietary product names, manufacturers names, and model numbers are given to clarify the designer's intent and are not intended to limit selection of similar products from acceptable manufacturers.

2. Manufacturer:
   a. Aurora Pump; Unit of General Signal.
   b. Fairbanks Morse Pump Corp.
   c. ITT Fluid Technology Corp.; ITT A-C Pump Unit.

3. Fire Pump: Pump shall be electric driven centrifugal horizontal split case, or vertical fire pump rated at not less than 150 percent of flow capacity and not less than 65 percent of net pressure. Pump shall meet requirements of UL 448.
   a. Fire Pump Controller: Automatic type, UL or FM approved, mounted in a NEMA, type 2 drip-proof enclosure.

4. Pressure Maintenance Pump: Pump shall be electric driven centrifugal type, horizontal shaft.
   a. Pressure Maintenance Pump Controller: Automatic and manual starting/stopping equipped with MANUAL-OFF-AUTOMATIC switch, mounted in a NEMA, type 2 drip proof enclosure.

5. Manifold Test Header: ASME B 16.5, Class 150 flanged inlet connection. Hose valves shall be UL or FM approved, with 2-1/2" fire hose threaded ends, per NFPA. The number of valves shall be per NFPA 20, and equipped with cap and chains.

SECTION 13930 –SPRINKLER SYSTEMS, FIRE PROTECTION

Scope: 1. Provide fire sprinkler protection in all areas of the building. The system shall be designed in accordance with NFPA 13, except that the design density and area of coverage will be in accordance with UFC 3-600-01 Design: Fire Protection Engineering for Facilities for all hazard classifications as required by the UFC.

2. Provide wet chemical fire sprinkler protection for the exhaust hood over cooking equipment, and exhaust duct serving the hood.

3. Division 15070: Mechanical Seismic Control Section applies to work of this Section.

4. Contractor shall comply with seismic requirements in accordance with AT/FP requirements.

References: 1. The publications referenced above (or below) establish minimum requirements for materials, systems and execution which may be specified in this Section.

AMERICAN SOCIETY FOR TESTING AND MATERIALS (ASTM)

ASTM A 47/A 47M	Ferritic Malleable Iron Castings
ASTM A 53/A 53M	Pipe, Steel, Black and Hot-Dipped, Zinc-Coated, Welded and Seamless
ASTM 53, ASTM A 135	Black Steel Threaded or Grooved Pipe for Fire Protection Use
ASTM A 536	Ductile Iron Castings
ASTM A 795	Black and Hot-Dipped Zinc-Coated (Galvanized) Welded and Seamless Steel Pipe for Fire Protection Use
ASTM B 88 02	Standard Specification for Seamless Copper Water Tube

AMERICAN SOCIETY OF SANITATION ENGINEERS

ASSE 1015	Double Check Backflow Prevention Assembly

AMERICAN WATER WORKS ASSOCIATION (AWWA)

AWWA C104	Cement-Mortar Lining for Ductile-Iron Pipe and Fittings for Water
AWWA C110	Ductile-Iron and Gray-Iron Fittings, 3 In. Through 48 In. (75 mm through 1220 mm), for Water and Other Liquids
AWWA C111	Rubber-Gasket Joints for Ductile-Iron Pressure Pipe and Fittings
AWWA C151/C140	Ductile-Iron Pipe, Centrifugally Cast, for Water or Other Liquids

ASME INTERNATIONAL (ASME)

ASME B16.1	Cast Iron Pipe Flanges and Flanged Fittings
ASME B16.11	Forged Fittings, Socket-Welding and Threaded
ASME B16.21	Nonmetallic Flat Gaskets for Pipe Flanges
ASME B16.3	Malleable Iron Threaded Fittings
ASME B16.4	Gray Iron Threaded Fittings
ASME B16.9	Factory-Made Wrought Steel Buttwelding Fittings

FACTORY MUTUAL ENGINEERING AND RESEARCH (FM)

FM P7825a	Approval Guide Fire Protection
FM P7825b	Approval Guide Electrical Equipment

NATIONAL FIRE PROTECTION ASSOCIATION (NFPA)

NFPA 13	Installation of Sprinkler Systems
NFPA 17A	Wet Chemical Extinguishing Systems
NFPA 24	Installation of Private Fire Service Mains and Their Appurtenances
NFPA 96	Ventilation Control and Fire Protection of Commercial Cooking Equipment
NFPA 1963	Fire Hose Connections

NATIONAL INSTITUTE FOR CERTIFICATION IN ENGINEERING TECHNOLOGIES (NICET)

NICET 1014-7	Program Detail Manual for Certification in the Field of Fire Protection Engineering Technology (Field Code 003) Subfield of Automatic Sprinkler System Layout

UNDERWRITERS LABORATORIES (UL)

UL Fire Prot Dir	Fire Protection Equipment Directory
UL Bld Mat Dir	Building Materials Directory

UNIFIED FACILITIES CRITERIA (UFC)

UFC 3-600-01	Design: Fire Protection Engineering for Facilities, 17 Apr 2003, with changes 16 Jan 04.

Submittals:

1. Shop Drawings: Submit 1/8” = 1’0” scaled layout drawings for fire protection pipe and fittings including, but not necessarily limited to, pipe and tube sizes, locations, elevations and slopes of horizontal runs, wall and floor penetrations, and connections. Show interface and spatial relationship between piping and proximate equipment.

2. Product Data: Submit manufacturer's data for fire protection systems, materials and products.

3. Approval Drawings: Prepare approval drawings of fire protection systems indicating pipe sizes, pipe locations, fittings, shutoffs, equipment, etc. Submit to Architect/Engineer and Agency having jurisdiction for approval. Submit one reproducible approved copy, bearing stamp and/or signature of Agency having jurisdiction, before proceeding with fabrication.

4. Approval Calculations: Prepare hydraulic calculations of fire protection systems. Submit to Architect/Engineer and Agency having jurisdiction for approval. Submit one approved copy, bearing stamp and/or signature of Agency having jurisdiction, before proceeding with fabrication.

5. Certification: The plans and calculations submitted for this project shall be signed by an individual who is a registered professional engineer and a Full Member of the Society of Fire Protection Engineers or who is certified as a Level IV Technician by National Institute for Certification in Engineering Technologies (NICET) in the Automatic Sprinkler System Layout subfield of Fire Protection Engineering Technology in accordance with NICET 1014-7. The individual shall be regularly engaged in the design and installation of the type and complexity of system specified in Contract documents, and shall have served in a similar capacity for at least three systems that have performed in the manner intended for a period of not less than 6 months.

6. Maintenance Data: Submit maintenance data and parts lists for fire protection materials and products. Include this data, product data, shop drawings, approval drawings, approval calculations, certificate of installation in maintenance manual.

7. Certificate of Installation: Submit certificate upon completion of fire protection piping work which indicates that work has been installed, flushed and tested in accordance with ANSI/NFPA 13, and also that system is operational, complete, and has no defects.

Training:

1. Provide training for operating and maintenance personnel.

Products:

1. Proprietary product names, manufacturers names, and model numbers are given to clarify the designer's intent and are not intended to limit selection of similar products from acceptable manufacturers.

2. Manufacturer:
   a. Grinnell.
   b. Reliable.
   c. Viking.

3. Underground Ductile Iron Piping: AWWA C151, C140.
   a. Fittings: AWWA C110, C111.

4. Schedule 40 Zinc Coated Steel with Threaded Ends: ASTM 53, ASTM A 135, or ASTM A 795, type E or S, Grade A, used for piping 2" and smaller.
   a. Fittings/Unions: ASME B 16.4, Class 150, zinc coated threaded end connection.

5. Copper Tubing: ASTM B 88M, type L or M, used for piping 2" and smaller.
   a. Fittings: ASME B16.22, nipples shall be ASTM B 42.

6. Schedule 40 Black Steel Type E or S, Grade A: ASTM A 53/A, ASTM A 135, or ASTM A 795, used for piping 2-1/2" and larger.
   a. Fittings: Grooved joints, ASTM A 47/A 47M, Grade 32510.
   b. Fittings: Flanges, ASME B16.1, Class 150.

7. Pipe in which threads or grooves are cut shall be Schedule 40, or shall be U.L. Listed to have a corrosion resistance ratio (CRR) of 1.0 or greater after threads or grooves are cut.

8. Pipe Hangers and Supports: UL listed or FM approved.

9. Valves: UL listed or FM approved.

10. Fire Department Connection: Flush type with cast brass body, matching wall escutcheon lettered "Auto Spkr" with a polished brass finish. Inlets shall have 2-1/2" threaded ends per NFPA.

11. Sprinkler Heads:
    a. Sprinkler heads shall be UL 199, UL 1767 (quick response) with 165º links. Sprinklers with internal O-rings shall not be used. Sprinklers shall be used in accordance with their listed coverage limitations. Temperature classifications shall be as indicated on drawings for hazard occupancy. Extended coverage sprinklers shall not be used. Sprinkler coverage not to exceed 225 square feet for light hazard or 130 square feet for ordinary hazard occupancies.
    b. Sprinkler Head Types:
       1) Concealed Sprinkler: Chrome plated standard or quick response type.
       2) Recessed Sprinkler: Chrome plated standard or quick response type.
       3) Upright Sprinkler: Brass standard or quick response type.
       4) Sidewall Sprinkler: Chrome plated standard or quick response type.
       5) Dry Sprinkler: Chrome plated pendant or sidewall.
       6) Pendant Sprinkler: Chrome plated standard or quick response.

12. Sprinkler Cabinet: Provide spare sprinkler heads in accordance with NFPA 13, and shall be contained in a suitable metal or plastic cabinet.

13. Waterflow Alarm: Waterflow alarm shall be electrically operated, exterior-mounted, waterflow alarm bell shall be provided and installed in accordance with NFPA 13. Waterflow alarm bell shall be rated 24 VDC and shall

be connected to the Fire Alarm Control Panel (FACP) in accordance with Section 13850 Detection and Alarm.

14. Alarm Initiating and Supervisory Devices:
    a. Sprinkler waterflow indicator switch shall contain a retard device adjustable from 0 to 90 seconds to reduce the possibility of false alarms caused by transient flow surges.
    b. Sprinkler pressure waterflow alarm switch shall have a maximum service pressure rating of 175 psi. There shall be two SPDT (Form C) contacts factory adjusted to operate at 4 to 8 psi.
    c. Valve supervisory (tamper) switch shall be tamper resistant and arranged to transfer upon removal of the housing cover or closure of the valve of more than two rotations of the valve stem.
15. Backflow Prevention Assembly: Double-check backflow prevention assembly complying with ASSE 1015. Unit shall have maximum 6 psi drop at water demand flow rate.

Execution: 1. Installation and field acceptance testing shall be in accordance with the applicable provisions of NFPA 13, NFPA 24 and the following:
    a. Protection of piping against earthquake damage.
    b. Pendent Sprinklers: Drop nipples to pendent sprinklers shall consist of minimum 1 inch pipe with a reducing coupling into which the sprinkler shall be threaded. Hangers shall be provided on arm-overs to drop nipples supplying pendent sprinklers when the arm-over exceeds 12 inches. Pendent sprinklers in suspended ceilings shall be a minimum of 6 inches from ceiling grid.
    c. Upright Sprinklers: Riser nipples or "sprigs" to upright sprinklers shall contain no fittings between the branch line tee and the reducing coupling at the sprinkler. Riser nipples exceeding 30 inches in length shall be individually supported.
    d. Reducers: Reductions in pipe sizes shall be made with one-piece tapered reducing fittings. The use of grooved-end or rubber-gasketed reducing couplings will not be permitted. Where used, face bushings shall be installed with the outer face flush with the face of the fitting opening being reduced. Bushings shall not be used in elbow fittings, in more than one outlet of a tee, in more than two outlets of a cross, or where reduction in size is less than ½ inch.
    e. Backflow Prevention Assembly Forward Flow Test: Each backflow prevention assembly shall be tested at system flow demand, including all applicable hose streams, as specified in NFPA 13.

SECTION 13965 – WET CHEMICAL EXTINGUISHMENT SYSTEM

Scope: 1. Provide range hood wet chemical for extinguishment system in accordance with NFPA 96.

References: 1. The publications referenced above (or below) establish minimum requirements for materials, systems and execution which may be specified in this Section.

NATIONAL FIRE PROTECTION ASSOCIATION (NFPA)

NFPA 96 Ventilation Control and Fire Protection of Commercial Cooking Equipment

Submittals: 1. Shop Drawings for all piping, nozzles, valves, fittings, remote pull stations, etc.

2. Scaled shop drawings showing hood type and equipment layouts required.

Products: 1. Standard Products: System components shall be the standard products of a manufacturer regularly engaged in the manufacturing of products that are of similar material, design and workmanship. The standard products shall have been in satisfactory commercial or industrial use for 2 years before bid opening. The 2-year experience shall include installations of systems under similar circumstances and of similar size. Systems shall be supported by a service organization.

2. Piping Components:
   a. Pipe and Fittings: Pipe and fittings shall be Schedule 40 stainless steel. Stainless steel tubing may be used in accordance with manufacturer's recommendations. Galvanized pipe shall not be used.
   b. Nozzles: Nozzles shall be stainless steel and shall be equipped with an integral strainer to prevent matter inside the distribution piping from clogging the nozzle orifice. Each nozzle orifice shall be provided with a seal to protect the nozzle from clogging by grease or other obstructions. This seal shall detach upon actuation.
   c. System Controls: Each system shall be actuated by fusible link and by a remote manual actuation station connected to the extinguishing system release mechanism by cable.
   d. Wet Chemical: The wet chemical shall not have an adverse effect on stainless steel during exposure periods of up to 24 hours.
   e. Identification Signs: Identification signs shall be located at each remote manual actuation station.

Execution: 1. Installation shall be performed by the installation technician in accordance with system manufacturer's instructions.

DIVISION 14 - CONVEYING SYSTEMS

SECTION 14240 - HYDRAULIC ELEVATORS

Scope: 1. Provide pre-engineered hydraulic passenger elevators.

2. Project requirements:
   a. Quantity: 1
   b. Capacity: 2000 pounds
   c. Speed: 150 fpm downspeed
   d. Travel distance: 12 foot (contractor to verify)
   e. Floors served: 2
   f. Size of platform: 6 foot x 8 inches x 4 foot 3 inches
   g. Doors per landing: 1
   h. Power supply:

References: 1. The publications referenced above (or below) establish minimum requirements for materials, systems and execution which may be specified in this Section..

AMERICAN SOCIETY FOR TESTING AND MATERIALS (ASTM)

ASTM A 53/	Pipe, Steel, Black and Hot-Dipped, Zinc-Coated, Welded and Seamless
ASTM A 106	Seamless Carbon Steel Pipe for High-Temperature Service
ASTM A 176	Stainless and Heat-Resisting Chromium Steel Plate, Sheet, and Strip
ASTM A 366	Steel, Sheet, Carbon, Cold-Rolled, Commercial Quality
ASTM A 568	Steel, Sheet, Carbon, and High-Strength, Low-Alloy, Hot-Rolled and Cold-Rolled
ASTM A 569	Commercial Steel (CS) Sheet and Strip, Carbon (0.15 Maximum Percent), Hot-Rolled
ASTM D 92	Flash and Fire Points by Cleveland Open Cup (IP36/84(89)
ASTM E 84	Surface Burning Characteristics of Building Materials

ASME INTERNATIONAL (ASME)

ASME A17.1	Safety Code for Elevators and Escalators

ASME A17.2.2	Inspectors' Manual for Hydraulic Elevators
ASME B16.11	Forged Fittings, Socket-Welding and Threaded
ASME B31.1	Power Piping
ASME QEI-1	Standard for the Qualification of Elevator Inspectors

U.S. NATIONAL ARCHIVES AND RECORDS ADMINISTRATION (NARA)

36 CFR 1191	Americans with Disabilities Act (ADA) Accessibility Guidelines for Buildings and Facilities

U.S. GENERAL SERVICES ADMINISTRATION (GSA)

FED-STD 795	(Basic) Uniform Federal Accessibility Standards

INTERNATIONAL CONFERENCE OF BUILDING OFFICIALS (ICBO)

ICBO Building Code	Uniform Building Code (3 Vol.)

NATIONAL ELECTRICAL MANUFACTURERS ASSOCIATION (NEMA)

NEMA LD 3	High-Pressure Decorative Laminates
NEMA MG 1	Motors and Generators

NATIONAL FIRE PROTECTION ASSOCIATION (NFPA)

NFPA 70	National Electrical Code
NFPA 252	Fire Tests of Door Assemblies

Submittals:

1. Shop Drawings: Detail drawings including dimensioned layouts in plan and elevation showing the arrangement of elevator equipment, anchorage of equipment, clearances for maintenance and operation; and details on hoistway, doors and frames, operation and signal stations, controllers, motors, guide rails and brackets, cylinder and plunge unit, and points of interface with normal power fire alarm system, HVAC or exhaust systems and interface with emergency power systems. Drawings shall show any revised building electrical system required to make supplied elevator system function as specified. Drawings shall contain complete wiring diagrams showing electrical connections and other details required to demonstrate sequence of operation and functions of system devices. Drawings shall include the appropriate sizing of electrical protective devices which are frequently different from National Electrical Code standard sizes.

2. Product Data:
   a. Training Data: Information describing the training course for operating personnel, training aids and samples of materials to be used, training schedules, and notification of training. A complete list of equipment and material, including illustrations, schedules, manufacturer's descriptive data and technical literature, performance charts, catalog cuts, installation instructions, brochures, diagrams, and other information required for fabrication and installation of the equipment. Data shall include calculations for reaction loads imposed on building by elevator systems and to demonstrate that the proposed elevator system conforms to paragraph SEISMIC REQUIREMENTS. Certified copies of list reports may be submitted in lieu of calculations. Calculations to demonstrate compliance with ASME A17.1, Rule XXIV shall be included. Spare parts data for each different item of material and equipment specified, after approval of detail drawings and not later than 3 weeks prior to date of beneficial occupancy. Data shall include a complete list of parts and supplies, with current unit prices and source of supply, and a list of parts recommended to be replaced and replacement interval required. Data shall include appropriate sizing of electrical protective devices.

a. Framed Instructions: Diagrams, instructions, and other sheets proposed for posting.
b. Test Procedures: A plan detailing the testing procedures shall be submitted 60 days prior to performing the elevator tests.

2. Samples: Samples of materials and products requiring color or finish selection.

3. Test Reports: Test reports in booklet form showing all field tests performed to adjust each component and all field tests performed to prove compliance with the specified performance criteria, upon completion and testing of installed system.

4. Certificates: Qualification Certificates; Certificates of experience of elevator mechanics employed to install, supervise and test the elevator shall certify mechanics to have not less than 5 years experience installing, supervising and testing elevators of the type and rating specified. Certificate shall certify that elevator system installer is acceptable to elevator manufacturer prior to installation of elevators.

5. Operation and Maintenance Data: Operations and Maintenance Manuals will be submitted in accordance with the requirements of specification Section 01800 Equipment Operating, Maintenance, And Repair Manuals Six copies of operation manual outlining the step-by-step procedures for system startup, operation and shutdown. Manuals shall include manufacturer's name, model number, service manual, parts list and brief description of all equipment, including basic operating features. Six copies of maintenance manual listing routine maintenance procedures, possible breakdowns and repairs, and troubleshooting guides. Manuals shall include equipment layout and complete wiring and control diagrams of the system as installed. Operation and maintenance manuals shall be approved prior to training course.

Designated Landing: 1. For the purposes of firefighter's service and emergency operations, as required by Section 211, ASME A17.1, the designated landing or level shall be the first floor. The alternate landing or level shall be the second floor.

Warranty: 1. Warranty service shall be provided for each elevator for a period of 12 months after date of acceptance by Contracting Officer. Warranty service shall be performed only by trained elevator mechanics during regular working hours and shall include manufacturer's warranty requirements including but not limited to adjusting, lubricating and cleaning of equipment and furnishing supplies and parts to keep elevator in operation, except such parts made necessary by misuse, accident or negligence not caused by the Contractor. Testing and adjustments shall be in accordance with the applicable provisions of ASME A17.1 and ASME A17.2.2. Emergency callback service shall be included and available 24 hours a day, 7 days per week, with an initial telephone response time of 1 hour and a response time of 4 hours for a mechanic to the site. Inspection and service for fire service operation and seismic requirements shall be performed every 6 months. Documentation of inspection and testing, and certification of successful operation shall be provided with each unit.

Regulatory Requirements: 1. Design and fabrication shall be in accordance with ASME A17.1. Each car shall have the capacity to lift a live load, exclusive of the car, at a speed as specified in the following schedule. The approximate travel, terminal floors, number of stops and openings, and the car sizes shall be as shown in the schedule. The elevators shall serve the floors with stops and openings in accordance with the requirements indicated. Elevators shall provide accessibility and usability for physically handicapped in accordance with the requirements for the handicapped in FED-STD 795 and 36 CFR 1191.

Elevator Schedule (Passenger)

Number of Elevators Required:	One
Service:	Passenger
Capacity:	2000 pounds

Speed:	full load up 150 fpm downspeed
Platform Size:	6'-8" x 4'-3"
Clear Car Inside:	
Net Travel:	12' (contractor to verify)
Landings:	Two
Openings: Front	One
Openings: Rear	One
Entrance Type:	Single-speed, Horizontal-sliding

Designated Landing 1. For the purposes of firefighter's service and emergency operations, as required by Section 211, ASME A17.1, the designated landing or level shall be the first floor. The alternate landing or level shall be the second floor.

Warranty: 1. Warranty service shall be provided for each elevator for a period of 12 months after date of acceptance by Contracting Officer. Warranty service shall be performed only by trained elevator mechanics during regular working hours and shall include manufacturer's warranty requirements including but not limited to adjusting, lubricating and cleaning of equipment and furnishing supplies and parts to keep elevator in operation, except such parts made necessary by misuse, accident or negligence not caused by the Contractor. Testing and adjustments shall be in accordance with the applicable provisions of ASME A17.1 and ASME A17.2.2. Emergency callback service shall be included and available 24 hours a day, 7 days per week, with an initial telephone response time of 1 hour and a response time of 4 hours for a mechanic to the site. Inspection and service for fire service operation and seismic requirements shall be performed every 6 months. Documentation of inspection and testing, and certification of successful operation shall be provided with each unit.

Products: 1. General Equipment Requirements

a. Standard Products: Material and equipment shall be the standard products of manufacturers regularly engaged in the fabrication of elevators and/or elevator parts, and shall essentially duplicate items which have been in satisfactory use for at least 2 years prior to bid opening. Equipment shall be supported by a service organization that is available 24 hours a day, 7 days per week, with a response time of 4 hours.

c. Nameplates: Each major item of equipment shall have the manufacturer's name, address, type or style, model or serial number, catalog number, and electrical and mechanical characteristics on a plate secured to the item of equipment.

d. Special Tools: One set of special tools, calibration devices, and instruments required for operation, calibration, and maintenance of the equipment shall be provided.

e. Electrical Work: Changes to the electrical distribution system required for coordination with elevator equipment shall be performed and coordinated by Contractor, at Contractor's expense. Electrical service for elevator machines shall be 480 volt, 60-Hertz, 3-phase, alternating current. Electric service for elevator car lighting shall be 120-volt, single-phase, 60-Hertz grounded service. Electrical work shall conform to requirements in Division 16 ELECTRICAL. A disconnect switch that will shut off power to the elevator car lighting shall be provided in the elevator machine room adjacent to the elevator control panel. A telephone junction box and an elevator car lighting junction box shall be provided adjacent to each controller. A single-phase electric circuit with grounded connection for video monitor shall be provided in machine room.

f. Use of Asbestos Products: Materials and products required for manufacturing and installing elevators shall not contain asbestos.

2. Miscellaneous Materials:

a. Materials for Car Enclosures: Materials for car enclosures shall meet flame spread rating 0 to 75 and smoke development 0 to 450 as tested in accordance with requirements of ASTM E 84 as established by ASME A17.1, Rule 204.2.

b. Structural Steel: Structural steel shall be hot-rolled commercial quality carbon steel, pickled, oiled, complying with ASTM A 569 and ASTM A 568.
c. Cold-Rolled Sheet Steel: Sheet steel shall be cold-rolled commercial quality low carbon steel, Class 1, exposed matte finish, oiled, complying with ASTM A 366 and ASTM A 568.
d. Stainless Steel: Stainless steel shall be ASTM A 176 Type 302/304, austenitic, corrosion-resistant, with grain of belting in the direction of longest dimension. Surfaces shall be smooth and without waves and shall be in compliance with ASTM A 366.

3. Passenger Elevator Car
a. Car Fronts: Fronts for passenger elevators shall be combination door post and return panels manufactured of 14 gauge stainless steel provided with necessary cutouts for operating devices. Car operating panel shall be recessed into front return panel with surface-applied operating panel cover. Position indicator in front return shall be recessed with a surface-applied cover plate. Exposed stainless steel shall be finished with No. 4 Satin Finish, unless otherwise specified.
b. Car Doors: Car doors for passenger elevators shall be constructed from 16 gauge sheet steel and stainless steel cladding. Each door shall be sound-deadened and reinforced to receive required operating mechanism and hardware, and have two removable door guides per panel. Seams, screws or binding strips shall not be visible from within the car. Threshold shall be extruded aluminum with grooves for door guides. Exposed stainless steel shall be finished with No. 4 Satin Finish, unless otherwise specified. Car doors shall be equipped with a proximity-type infrared protective device having the following operation:
1) When doors are in full-open position, doors shall be unable to initiate closing if a person comes within detection zone. Detection zone moves with doors, so that if a passenger or object enters the zone after doors have begun to close, doors shall stop, then reverse to reopen. Doors shall reclose after a brief time. A passenger entering or leaving cars shall not cause doors to reopen unless doors reach a predetermined proximity to passenger.
1) After a stop is made, doors shall remain open for a time to permit passenger transfer, after which doors shall close automatically. This time interval shall be less for a car call than for a hall call or a coincident car/hall call.
2) If there is either a hall call anywhere in the group or a car call in the car in question and doors are prevented from closing for a fixed time period, door protective device shall be rendered inoperative, a buzzer shall sound in car and doors shall close at approximately half speed. Normal door operation shall resume at next landing reached by car.
b. Car Platform: Car platform for passenger elevators shall be fabricated from steel plates secured to a steel frame or plywood secured to a steel frame. Steel car platforms shall be assembled into a one-piece platform with top and bottom steel plates welded to structural steel frame and covered with felt and sound-isolation. Plywood car platform shall be 18 mm (3/4 inch) thick Exposure 1 plywood secured to underside of structural steel frame with metal fire protection secured to underside of structural steel frame.

d. Sling: Sling for passenger elevators shall be constructed of heavy steel stiles properly affixed to a steel crosshead and bolster with adequate bracing members to remove all strain from car enclosure. Steel bumpers shall be furnished for fastening sling to plunger.
e. Walls: Walls for passenger elevators shall be 7 feet 11-1/2 inches high from floor to the underside of lighting fixtures. Side and rear panels shall be 16 gauge sheet steel panels. Side and rear removable panels shall be applied to car walls and shall be manufactured from 3/4 inch plywood or composition board finished on front, back and edges faced with plastic laminate conforming to NEMA LD 3, general purpose type. Panels shall be mounted on car walls in a manner permitting their reversing. Panels shall be evenly spaced with not less than two panels on each side and three panels at rear with reveal standard with manufacturer. Vent around base shall be concealed behind removable panels.
f. Car Top, Ceiling and Light Fixtures: Car top for passenger elevators shall be manufactured from 12 gauge sheet steel and shall be not less than 5 1/2 in high with drop-ceiling and light fixtures. Ceiling

shall be egg crate white plastic fire-retardant light diffuser supported by polished aluminum perimeter frame and dividers to form drop-ceiling light fixture. Light fixtures shall be fluorescent type flush with car ceiling, manufactured of sheet steel with flange and enclosed sides and top, baked-enamel reflector, mounted directly to outlet box. Bottom of fixtures shall be flush with car ceiling. Fluorescent light fixtures shall be dual lamp with quick-starting high-power factor, Class P ballasts with safety lamp guard clamps on fluorescent tubes. Light level shall average at least 10 footcandles measured at the car threshold, with the door closed. A part of car light fixture shall be removable to permit use of the emergency exit panel in top of car.

g. Emergency Exit: Car top for passenger elevators shall be manufactured with a hinged emergency exit panel of 12 gauge steel which opens up to clear the crosshead and car door operator. Emergency exit panel shall be hinged on counterweight side and held in place with nonremovable fastening devices at each corner, and be openable from top of car only. A minimum of two sides of exit panel shall lap exit opening by 1in. Exits shall be equipped with electrical contacts which will prevent operation of car when the exit door is open and cause the alarm bell to ring.

h. Floor Finish: Floor finish for passenger elevators shall be finished with resilient tile flooring not less than 3/16 inch thick or flexible type homogeneous vinyl tile not less than 1/8 inch thick as specified in Section 09650 RESILIENT FLOORING. Tile shall be laid flush with the extruded aluminum platform threshold.

i. Base: Base for passenger elevators shall be plastic laminate, 6 inches high.

j. Handrails: Handrails for passenger elevators shall be mounted on each wall and shall comply with ASME A17.1, FED-STD 795, and 36 CFR 1191. For elevators with two-speed horizontal-slide openings, handrails shall be turned back to wall.

k. Exhaust Fan: Exhaust fan for passenger elevators shall be two-speed exhaust type ventilating unit mounted in car ceiling and shall be provided with a stainless steel grille. Units shall be suitably isolated from car ceiling and shall provide at top speed of a minimum of 6 air changes per hour for car volume and car occupancy. Switches for the operation of the exhaust unit shall be located in car station locked cabinet or key-switched.

l. Communications: A telephone system in stainless steel cabinets shall be provided for passenger elevators. A vandal-resistant speaker type intercom with push-buttons to activate shall be installed in car station behind a stainless steel perforated grille and connected to a programmable auto-dialer located in machine room. Auto-dialer shall be provided with a solid-state charger unit which will automatically provide emergency power and an immediate transfer in the event of failure of normal power supply. The push-button located in car station or in separate cabinet shall be at the prescribed handicapped height and shall be identified as "EMERGENCY PHONE PUSH TO ACTIVATE". The entire communication assembly shall be approved for an elevator installation. The push button telephone shall comply with FED-STD 795 and 36 CFR 1191. The telephone communication shall not be terminated until one of the communicating parties hangs up the receiver or manually disconnects the communication link.

m. Car Emergency Lighting System: Emergency car lighting system for passenger elevators shall consist of an emergency power pack on top of the elevator and a remote lighting fixture inside elevator car located in car operating panel.

n. Power Pack: Power pack for emergency lighting system shall be a sealed lead-cadmium or nickel-cadmium 6-volt rechargeable batteries with solid-state controls and an integral regulating charger connected to normal power supply. Power pack unit shall contain the following:
   1) Minimum 6 inch diameter alarm bell connected to the elevator alarm and emergency push-button.
   4) Top of car light fixture with protective wire guard.
   5) Testing circuit and pilot light.
   6) Low-wattage pilot light indicator.
   7) Battery low-voltage disconnect.

o. Emergency Light Fixture: Emergency light fixture shall be located in car station inside elevator car, with flush-mounted lens and shall consist of the following:
   1) A minimum of two lamps capable of providing a minimum level of illumination of 1.0 footcandle at a

point 4 feet above the floor, 1 foot in front of car station.

2) Steel fixture frame with chrome finish.
3) Frosted acrylic lens, 1/4 inch.

p. Remote Light Fixture: Upon interruption of normal power, remote light fixture for passenger elevators shall automatically and immediately illuminate and permit operation of alarm bell, subject to activation of emergency stop-switch or alarm button. Emergency power pack shall be capable of providing a minimum of 1 hour emergency bell operation and 4 hours of continuous illumination.

q. Protection Pads: Passenger Elevator Car No. 1: Car shall be provided with wall protection pads with inconspicuous stainless steel pad hooks spaced not over 18 in apart 90 inches above cab floor. Pads shall be heavy-quality fire-retardant treated canvas with two layers of sewn cotton batting with metal eyelets for each pad hook. Pads shall cover entire wall surface except operating devices. Pads shall be flame retardant in accordance with ASME A17.1, Rule 204.2.

r. Certificate Frame: A stainless steel certificate frame with translucent plexiglass lens of the appropriate size to receive certificate issued by inspecting agency shall be provided. Frame shall be engraved to show name of manufacturer, carrying capacity in pounds and maximum number of persons allowed.

s. Car Guide Shoes: Guide shoes for passenger elevators shall be the adjustable mounting type on each side of car. Shoes shall be rigidly secured in accurate alignment at top and bottom of car frame. Flexible type sliding guide shoes shall consist of a swivel-type shoe, assembled on a metal base with provisions for self-alignment. Each shoe shall be provided with renewable gibs. Car guide shoes shall be adjustable for side play between guide rails. Renewable wearing gibs shall be fabricated from a durable plastic compound material having a low coefficient of friction and long wearing qualities. Gibs shall be the type requiring minimum rail lubrication.

3. Passenger Elevator Hoistway Entrances

a. Hoistway Doors: Hoistway doors for passenger elevators shall be designed and fabricated as part of a Class B 1-1/2 Hour fire-rated door/frame assembly to meet requirements of NFPA 252 and shall bear the label of an approved testing laboratory. Doors for passenger elevators shall be hollow metal type with plain panel design not less than 1-1/4 inches thick with 16 gauge face sheet-steel panels, and stainless steel cladding, with 16 gauge sight guards to match door finish. Each door shall be reinforced with continuous vertical members and filled with sound-deadening material. Doors shall be reinforced to accept the required operating mechanism and hardware. Doors shall have two removable door guides per panel. Seams, binding strips or screws shall not be visible from the landing. Exposed steel shall be finished with rust-inhibitive primer and baked-enamel in a color to be selected, unless otherwise specified.

b. Hoistway Frames: Hoistway frames for passenger elevators shall be designed and fabricated as part of a Class B 1-1/2 Hour fire-rated door/frame assembly to meet requirements of NFPA 252 and shall bear the label of an approved testing laboratory. Frames shall be formed 14 gauge sheet-steel with head and jamb in flush alignment and corners welded and ground smooth. Head and jamb section shall be bolted assembly with bolts, washer and locking nut or lock washer. Frame assembly shall be securely fastened to the structure. Frames shall return to the wall. Combination buck and jamb frames may be provided with knockdown back flanges to permit installation in concrete walls. Exposed steel shall be finished with rust-inhibitive primer and baked-enamel in a color to be selected, unless otherwise specified.

c. Symbols: Raised stainless steel symbols as required by FED-STD 795 and 36 CFR 1191 of color selected, shall be provided at each floor to indicate the floor location. Symbols shall be attached with concealed fasteners. Symbols shall be placed in a location which can be seen by passenger from the opened passenger elevator doors.

d. Sills: Sills for passenger elevators shall be extruded aluminum with slip-resistant surface and machined grooves for door guides, secured to floor beams.

e. Strut Angles: Strut angles for passenger elevators shall be structural steel of size not less than 3 x 3 x 3/16 inch extending from sill to beam above and anchored to building structure with structural steel fastenings and bracings of structural members with a cross section of not less than strut angles.

g. Door Hangers and Housing: Each door panel shall be provided with not less than two sheave-type

hangers designed for required door operation. Hanger housing and support shall be fabricated from formed Z-shaped steel angles of size not less than 3/16 inch thick bolted to strut angles.

h. Door Rollers: Door rollers shall be constructed with grease-packed ball-bearings and shall be tired with a sound-reducing material. Diameter of rollers shall not be less than 3-1/4 inches for car doors and not less than 2-1/4 inches for hoistway doors. Upward thrust shall be taken by a hardened and ground ball-bearing roller assembled on an eccentric stud to provide adjustment.

i. Hanger Track: Hanger track shall be of high carbon cold-drawn steel, round at top to receive door rollers, round at bottom to receive up-thrust rollers, of size engineered to accommodate load requirements.

j. Covers and Guards: Hanger covers, dust covers, toe guards and fascia plate shall be fabricated from 16 gauge reinforced steel and finished with baked-enamel. Hanger covers shall extend the full door travel and shall be mounted in sections for ease of servicing door hangers. Dust covers shall be provided over top terminal landing door only and shall be secured to hanger housing and building structure. Toe guards shall be secured to sill. Fascia plates shall be provided between each door hanger housing and sill.

2. Passenger Elevator Door Operation: Car and hoistway doors for passenger elevators shall be operated simultaneously by an electric-power door operator. Doors shall operate smoothly in the opening direction and closing direction and be electrically or hydraulically cushioned to stop at both the full-open and full-closed position. Operators shall be high-speed heavy-duty type which will provide an average door-opening speed of 2-1/2 fps. Car and hoistway doors shall be opened and closed simultaneously in a maximum time of 6.5 seconds. When on automatic operation door-closing time shall not exceed 8.0 seconds and door-closing force shall not exceed 30 pounds. Reversal of doors when closing shall be accomplished by the "DOOR OPEN" button, car door safety edge, or interruption of the photoelectric light beams. Doors shall be arranged so that doors can be opened manually in the event of power failure.

3. Passenger Elevator Operating And Signal Fixtures:

a. General: Elevator fixtures and panels for passenger elevators shall be constructed of 1/8 inch thick faceplates of stainless steel. Fastenings for all exposed fixtures shall be secured with tamper-proof spanner-head screws of same material and finish as fixture. Hall and car call-buttons shall be the call-register type with a low-voltage power supply not to exceed 48 volts. Pressure on a button shall illuminate button to indicate that a call in the desired direction has been registered. Car and hall fixtures shall be designed and located at the prescribed height to accommodate the handicapped in accordance with FED-STD 795 and 36 CFR 1191 for passenger elevators only. Handicapped markings shall be integral with faceplates in accordance with FED-STD 795 and 36 CFR 1191. Surface-applied markings are not acceptable. Engraving shall be black-filled except for fire-service identification which shall be red-filled. Operating and signal fixture contacts and lamps shall be completely enclosed in steel boxes finished with a baked-enamel. Boxes for hall landing devices shall be equipped for proper adjustment to wall. Lamps shall be installed in light-tight compartments. Cover-plates shall be provided with rubber gaskets when exposed to weather or harmful contaminants. Replacement bulbs shall be readily available from three sources.

b. Car Operating Panel: Car operating panel for passenger elevators shall be provided with the necessary raised 0.03 inch markings for the handicapped, and shall include a series of minimum 3/4 inch diameter push-buttons numbered to correspond to the floor served and various additional switches, buttons and light jewels, including emergency stop, alarm button, "DOOR OPEN" button and communication speaker. Operating buttons shall be vandal-resistant metal encased and embossed to permit illumination when a call is registered. Buttons shall be designed with 1/32 inch operating clearance to set on faceplate in lieu of the button mechanism. Buttons shall have maximum protrusion of 3/16 inch beyond the faceplate and shall have beveled edges to prevent damage from side blows. Buttons and switches not required for automatic or fire-service operation shall be key-operated and mounted on front-return car operating station. Elevator number and "NO SMOKING" shall be international symbol engraved on upper portion of car. Operating panel in car shall consist of a flush-mounted panel

containing the following operating devices:

1) "DOOR OPEN" button.
5) "DOOR CLOSE" button.
6) Key-operated car fan/light switch.
7) Key-operated ventilating blower switch/call light.
8) Communication speaker phone, grille and push-to-call button.
9) Emergency stop-switch key-operated when operated will stop the car independently of normal stopping devices. Operation of emergency stop switch shall not cause any power variance or surge that may affect the operation or condition of the control panel or its components.
10) Emergency signal-switch connected to a 6 inch diameter signal bell outside of elevator hoistway at first floor located as shown or as directed.
11) Key-operated independent operation switch (for multi-car only).
12) Key-operated inspection switch which will render normal operation inoperative for the purpose of using the hoistway access switch.
13) Key-operated fire-service switch and light jewel.
14) Key-operated hospital emergency switch.

c. Auxiliary Car Operating Panel: Auxiliary car operating panel for passenger elevators shall be similar in design to main car panel, and shall include all devices necessary for automatic operation such as emergency stop switch, alarm bell, "DOOR OPEN" button.
d. Hall-Call Station: Hall-call operating devices for passenger elevators at landing shall consist of an "UP" push-button at bottom landing, a "DOWN" push-button at top landing, and "UP" and "DOWN" push-buttons at all other landings. Buttons shall be vandal-resistant metal encased and back-lighted to permit illumination when a call is registered. Buttons shall be designed with 1/32 inch operating clearance to seat on faceplate in lieu of button mechanism. Buttons shall have maximum protrusion of 3/16 inch beyond faceplate with beveled edges to prevent damage from side blows.
e. Fire-Service Switch: Fire-service switch for passenger elevators shall be located at the designated landing.
f. Direction Lanterns: Lanterns for passenger elevators shall be in accordance with FED-STD 795 and 36 CFR 1191 and shall be provided at all floor landings and in each car entrance column. Lanterns shall be the manufacturer's standard design. Lanterns shall signal the approach of a stopping car when car is a predetermined distance from landing.
g. In-Car Car-Position Indicator: Indicator numerals and directional arrows for passenger elevators shall be flush-mounted faceplate with black-filled engraved numerals not less than 1 inch high and 3/8 inch diameter vandal-resistant light jewels directly beneath each number. As car travels through hoistway the car position shall be indicated by illumination of light jewel corresponding to landing at which the car is stopped or passing. Necessary light baffles shall be provided. Floor numerals and letters shall illuminate white. A position indicator of the digital-readout or dot-matrix type 2 inch high indication shall be provided in car transom panel. Number corresponding to car position shall remain illuminated when motor drive is shut down. Illumination shall be shrouded in an approved manner to protect against glare from car lighting.
h. Audible Signals: An audible signal shall be provided at each floor landing and in each car and shall sound coincident with the lantern illumination indicators. The audible signal shall be no less than 20 decibels with a frequency no higher than 1500 Hz. The audible signal shall sound once for UP direction and twice for DOWN direction.
i. Combination Hall-Position Indicator and Directional Arrows: Combination hall-position indicator and directional arrows for passenger elevators shall be provided at first floor landing directly above entrance frame. As elevator travels in hoistway, elevator position shall be indicated by illumination in alpha-numeric characters corresponding to the landing where elevator is stopped or passing. Number corresponding to position of car shall remain illuminated when motor is shut down. An audible signal shall sound in elevator car to indicate that the elevator is stopping or passing a floor served by elevator. Fixture design and operation shall be similar in design to that specified for Car Position

Indicator.

4. Passenger Car Operation (Two-Stop Automatic Car Operation): Passenger Elevator No. 1: The operating device at each of two hoistway landings shall consist of a single illuminating push-button. The system shall be designed for operating elevator from push-buttons at landings and car buttons marked for corresponding landings. Pressure on a car button or landing button shall dispatch or call the car to other landings if interlock circuits have been established. A call shall remain registered if a lower floor landing button is pressed while car is making an UPWARD trip. After car has reached upper landing and interlock circuits have been reestablished the car shall automatically reverse and respond to lower landing call. Elevator shall operate similarly for DOWN direction of travel. A time-limit relay shall be provided to hold the car for a predetermined period at landing where car stops. When all calls are completed the elevator shall park at last floor served. A landing button pressed momentarily at same floor at which the car is parked shall automatically open car hoistway doors.

5. Automatic Emergency Power Operation: Elevator control system shall be arranged to operate on emergency power supply upon failure of the normal power supply. Elevators operating on dedicated service, such as fire service, will not be required to return to designated landing when emergency power becomes available for respective elevator. When normal power supply fails, all cars shall shut down.

6. Automatic Elevator Operation
   a. General: The operating device shall consist of a series of push-buttons in the car numbered to correspond to various landings, "UP" and "DOWN" buttons at intermediate landings and a single button at terminal landing. To meet the elevator operation requirements specified in this section all buttons shall be connected electrically to the control system which governs the floor selection, car selection, direction of travel and governs the acceleration and retardation.
   b. Operation: Car calls shall be registered within the car by pressing the button corresponding to the designated floors. Hall calls shall be registered by pressing buttons in the corridor push-button fixture. Once the demand for elevator service has been established and the car has received a start signal the car operation shall be as follows.
      1) Door Closing: Doors shall close automatically. When doors are fully closed and the interlock circuit established, the car shall start to move in the direction established by control system. Car shall accelerate and decelerate automatically and stop at first floor for which a car button has been registered or at first floor for a corridor demand which has been assigned to car. Car shall stop at all floors for which car calls are registered in the order in which the floors are reached and shall stop for any corridor demands assigned to the cars in the order in which the floors are reached.
      6) Door Opening: Doors shall open automatically as car reaches the landing. After a predetermined time the doors shall close and the car shall proceed to answer the remaining car or assigned corridor calls. A protective device such as a safety edge and light beam device shall be provided on car door and when activated will prevent closing of doors. Cars shall become available for assignment at whatever floor the last car demand has been satisfied in the direction in which the car is traveling.
      7) Car Dispatch: When car does not receive a demand dispatch at dispatching floor for an adjustable time period up to 10 minutes set initially at 5 minutes, the motor drive unit shall be switched-off. If the car's switched-off motor drive unit receives a demand dispatch the motor drive unit shall automatically restart.
      8) Door Dwell-Time: Door open dwell-times shall be adjustable so that the open time for a car call is shorter than the open time for corridor calls and second passengers. If a longer time is needed for passenger entry, doors can be prevented from closing or reversing by the light beam door control, the protective leading edge on car door, or by pressing "DOOR OPEN" button in car. Door dwell-times shall comply with FED-STD 795 and 36 CFR 1191.
   a. Automatic Load Weighing: Passenger elevators shall be provided with load-weighing devices which will cause elevator to bypass hall calls when elevator is filled to an adjustable percentage. Corridor calls

shall remain registered until the next available car responds to the call.

b. Anti-Nuisance: Passenger elevators shall be provided with a system which will cancel all car calls in the event that between 3 to 5 times the number of car calls are registered as there are passengers in car, allowing 154 lb. per passenger.

c. Door Operation: Double-door operation are not acceptable for passenger elevators. If an UP traveling car has a passenger for an intermediate floor and a DOWN call is registered at that floor with no-calls above car, the car shall travel to floor, open the door and let passenger out, then light the DOWN direction arrow in hall lantern and accept the waiting passenger who registered the DOWN call. Doors shall not perform the open-close cycle before elevator proceeds to next call.

d. Automatic Power Shutdown: Automatic power shutdown of the elevators will be initiated by a waterflow switch supervising sprinklers located in the elevator machine room or in the elevator hoistway. Provide heat detectors which are fixed-temperature-rate-of-rise type, rated at 134 to 140 degrees F adjacent to each sprinkler head in the hoistway(s) and in the machine room. Heat detectors shall be connected to the elevator control system which shall cause the following to the affected elevators), upon activation of the heat detector.

1) Elevators which are in motion will proceed to the nearest available landing away from fire floor, and shall cause power-operated doors to open and remain open until manually reset.. The fire floor is considered the floor where the actuated heat detector is located.

2) Elevators which are standing at a landing with open doors will remain open at the floor. If power-operated doors are closed, the elevator system will cause doors to open.

7. Sensor And Control Wire Surge Protection: Digital and analog inputs shall be protected against surges induced on control and sensor wiring. Digital and analog outputs shall be protected as shown against surges induced on control and sensor wiring installed outdoors. Fuses shall not be used for surge protection. The inputs and outputs shall be tested in both normal mode and common mode using the following waveforms:

a. A 10 microsecond rise time by 1000 microsecond pulse width waveform with a peak voltage of 1500 volts and a peak current of 60 amperes.

b. An eight microsecond rise time by 20 microsecond pulse width waveform with a peak voltage of 1000 volts and a peak current of 500 amperes.

9 Communications Links Surge Protection: Communications equipment shall be protected against surges induced on any communications link. Cables and conductors, except fiber optics, which serve as communications links from Motor Control Room (MCR) to field equipment, and between field equipments shall have surge protection circuits installed at each end. Protection shall be furnished at equipment and additional triple electrode gas surge protectors rated for the application on each wireline circuit shall be installed within 1 m of the building cable entrance. Fuses shall not be used for surge protection. The inputs and outputs shall be tested in both normal mode and common mode using the following two waveforms:

a. A 10 microsecond rise time by 1000 microsecond pulse width waveform with a peak voltage of 1500 volts and a peak current of 60 amperes.

b. An eight microsecond rise time by 20 microsecond pulse width waveform with a peak voltage of 1000 volts and a peak current of 500 amperes.

8. Communications Links Over Voltage Protection: Communications equipment such as MODEMs, line drivers, and repeaters shall be protected against overvoltage on any communications link conductors. Cables and conductors, which serve as communications links, except fiber optics, shall have overvoltage protection for voltages up to 480 Vac rms, 60 Hz installed. Instrument fuses or fusible resistors are required for this application.

9. Firefighters Service: Firefighter service shall be in accordance with ASME A17.1 for automatic elevators. Elevator lobby and machine room smoke detectors shall be photoelectric spot-type smoke detectors. Smoke detectors shall be powered from the building fire alarm control panel. Elevator lobby and machine room

smoke detectors shall be in accordance with Section 13850 DETECTION AND ALARM.

10. Elevator Power Unit
    a. Pumping and Control Mechanism: Hydraulic fluid shall be provided in the reservoir, pump and control valve. Hydraulic fluid shall have a minimum fire point of 375 degrees F as established by ASTM D 92. If oil temperature drops below pre-set minimum, elevator shall be dispatched automatically to lowest terminal floor at which point the pump will bypass oil in system without car motion until pre-set temperature is reached. Normal response to passenger demand shall not be affected by this control. Resistance type heating elements do not meet the intent of this specification.
    b. Oil Temperature Device: An oil temperature device shall be provided that will maintain oil temperature between 70 degrees F and 100 degrees F regardless of ambient temperatures.
    c. Pump: Pump shall be a rotary-positive displacement type for oil-hydraulic elevator service designed for steady discharge with minimum pulsation to give smooth and quiet operation, with an output which will not vary more than 10 percent between no-load and full-load on the elevator. Operating pressure shall not exceed 400 psi.
    d. Piping: Piping shall be ASTM A 53 Grade E or S, ASTM A 106 Grade B, or grooved piping system of minimum schedule 40 seamless steel conforming to ASME A17.1 and ASME B16.11. Pipes shall conform to the cleanliness requirements of ASME B31.1.
    e. Motor: Motor shall be especially designed for oil-hydraulic elevator service and shall be of standard manufacture duty rating and provided with specified speeds and loads.
    f. Oil-Control Unit: Oil-control unit shall contain the following valve assemblies:
        1) Automatic shut-off valve shall be provided in the oil-supply line as close to the cylinder inlet as possible. When there is a 10 percent drop in NO-LOAD operating pressure, the automatic shut-off valve shall be activated. When activated, the device shall immediately stop the descent of elevator and hold the elevator until it is lowered by use of the maximum lowering feature of the valve. Manual lowering feature of automatic shut-off valve shall be arranged to limit the maximum descending speed of elevator to 15 feet per minute. Exposed adjustments of automatic shut-off shall have the means of adjustment sealed after being set to the correct position.
        6) Relief-valve for hydraulic shall be externally adjustable and shall bypass the total oil flow without increasing back pressure by more than 56 percent above working pressure.
        7) Safety check-valve shall close quietly without permitting any perceptible reverse flow and shall be designed to support the elevator on a positively locked column of oil when car is at rest.
        8) Up-start and stop valve shall be externally adjustable and shall bypass oil flow during the start-and-stop of motor-pump assembly. Valve shall close slowly, gradually diverting oil to the jack unit to insure smooth up-start and up-step.
        9) Lowering and leveling valve shall be externally adjustable for drop-away speed, lowering speed, leveling speed and stopping speed to insure smooth down-starts and stops. Leveling valve shall be designed to level the car to floor in the direction the car is traveling when slowdown is initiated.
        10) Manual lowering valve shall be capable of lowering the elevator car in event of power failure. Manual-lowering valve shall be arranged to limit the maximum descending speed under manual operation to 15 fpm.
        11) A service check-valve shall be installed in oil supply line between power unit and jack.
    g. Storage Tank: Storage tank shall be single-wall construction of steel with a steel cover. Manufacturer's recommendation for the type of oil to be used shall be included in written instructions for the care, adjustment and maintenance of equipment.
    g. Controller: Electric controller shall be of the microprocessor based logic type with battery backup provided with reduced voltage starting. Components required for proper elevator performance shall be neatly mounted and wired and completely enclosed in a cabinet with a mechanically-latched door. Control cabinet shall be designed for mounting on power unit, wall or floor stand. Electric control apparatus shall be completely isolated from oil reservoir. A feature shall be incorporated in electrical control circuit which will cause elevator car to descent automatically to the lowest terminal landing, if the system runs low on oil during ascending of the car. If power-operated doors are used, the car and

hoistway doors shall automatically open when car reaches landing to allow passengers to exit. Parked car shall have doors in closed position and all control buttons shall be made inoperative.

i. Sound Reduction: Sound-insulating panels shall isolate airborne noise from motor pump assembly. Openings shall be provided to adequately ventilate the power unit motor. A minimum of two sound-isolating couplings shall be installed in oil line in machine room between pump and jack. Couplings shall be designed and manufactured to be blowout proof. Oil-hydraulic silencer shall be installed in oil line near power unit and shall contain pulsation absorbing material surrounded by a blowout-proof housing. Power unit assembly shall be mounted on vibration pads to isolate the unit from building structure.

12. Leveling Device: Elevators shall be equipped with a 2-way leveling device to automatically bring the car to floor landings. Car shall automatically re-level at each landing to correct the overtravel and undertravel, and maintain the level regardless of load on car. Electric stopping system shall be arranged so that the car will stop level with the floor before brake is set. Stopping accuracy shall not exceed a plus or minus 1/4 in.

13. Jack Unit: Jack unit shall be designed and constructed of sufficient size to lift the gross load to the height specified and shall be free from oil leakage. Brittle material such as grey cast iron shall not be used in jack construction. Jack unit shall consist of the following:
    a. Telescoping plunger (Holeless) or Direct displacement plunger fabricated of heavy seamless steel tubing accurately turned and polished.
    b. Stop-ring welded or screwed to the plunger to positively prevent plunger from leaving the cylinder.
    c. Internal guide bearing.
    d. Packing or seal.
    e. Drip ring around cylinder top.
    f. Outer cylinder made of steel tubing.
    g. Air bleeder.
    h. Brackets welded to jack cylinder for supporting the elevator on pit channels.
    i. Scavenger pump with copper tubing connected to the tank.

14. Elevator Supports: Structural steel beams, inserts, brackets, bolts and fastening devices shall be provided for proper installation of elevator equipment. Wood plugs are not acceptable.

15. Buffers: Buffers shall be of design suitable for depth of pit. Buffer anchorage at pit floors shall be provided for each car and counterweight and arranged to avoid puncturing the pit waterproofing. Type of buffer used shall be tested and approved for compliance with elevator service requirements before installation. Pipe struts and steadiers shall be provided as required for pit conditions. A metal plate with information concerning stroke and load-rating shall be permanently fastened to each buffer. Pit-mounted buffers shall have an adequate stroke designed to bring the fully-loaded car and counterweight to rest from governor tripping speed at an average rate of retardation not exceeding gravity. Moving portion of buffer shall be designed to be accelerated by the car without noticeable peak retardation. Spring buffers shall be in accordance with ASME A17.1A17.1.

16. Lubrication Points: Every part subject to movement friction shall be provided with provisions for oil or grease lubrication. All points of lubrication shall be readily accessible.

17. Seismic Requirements: Seismic protection shall be provided in conformance with ASME A17.1, Rule XXIV, and ICBO Building Code. The Contractor shall hire a registered engineer to submit the stamped calculations and drawings..

Execution

1. Installation: Elevators and equipment shall be installed in accordance with ASME A17.1 and manufacturer's recommendation. Guide rails shall be set plumb and parallel and attached to guide rail brackets secured to building structure . Steel shim plates shall be used for aligning equipment. Guide rail sections shall be

joined together in accordance with ASME A17.1. Guide rails shall be thoroughly cleaned and made smooth before elevator is put into operation. During installation all stainless steel shall be protected.

2. Casing, Cylinder And Plunger Unit: A steel casing minimum 8 inches larger in diameter than the cylinder sealed at bottom with steel plate or concrete plug shall be complete with provisions to accommodate a single wall or double wall cylinder. Casing shall be accurately positioned, plumbed and set to accept the cylinder. The cylinder shall be protected from corrosion by totally enclosing the cylinder with a separate schedule 80, polyvinyl chloride jacket or with a high density, fused polyethylene coating, recommended by the manufacturer. Area between casing and cylinder wall shall be filled with washed dry sand after cylinder has been accurately located. Top of casing shall be sealed. The work of boring the well and setting the cylinder shall be coordinated with construction of concrete pit.

3. Elevator Wiring: Wiring shall be provided for electrically-operated items of elevator equipment to comply with requirements of NFPA 70 and Section 16415 ELECTRICAL WORK, INTERIOR. For control and signal circuits wire shall be minimum No. 18 AWG. For power and lighting circuits wire shall be minimum No. 12 AWG. Work light fixtures equipped with 150 watt incandescent lamps and ground duplex receptacles shall be provided at top and bottom of car. Work light fixtures and traveling cable junction boxes shall be located to provide illumination at junction boxes. Wiring shall terminate in junction boxes. Wires shall be identified and shall match symbols shown on wiring diagrams. Control and signal wires shall be brought to accessible numbered terminal blocks on the controller. Intra-panel wiring shall be flame-resistant type.
   a. Traveling Cables: Cables shall terminate at numbered terminal blocks in car and machine room. Traveling cable shall be provided with a separate shielded circuit for communication system and hang to obtain proper size of loop. Traveling cable shall be provided with 10 percent spare conductors for each car.

4. Painting And Pipe Color Code Marking: Except for factory-finished items and corrosion-resistant items, machined surfaces shall be painted as specified in Section 09900 PAINTS AND COATINGS. Color Code marking of piping shall be as specified in Section 09900 PAINTS AND COATINGS.

5. Testing: Testing shall be in accordance with requirements of ASME A17.1and ASME A17.2.2; and as specified below. The Contractor shall conduct a complete test of the system. After the system has passed all tests, the Contractor shall notify the Contracting Officer in writing, 30 days prior to the time of performing the acceptance test, that the system is complete and is ready for final acceptance testing. The Contractor after receiving written approval from the Contracting Officer will conduct a complete acceptance test of the system. The Contractor shall provide the services of an elevator inspector, employed by an independent testing company to inspect the elevators, witness the final testing and certify the elevators. The inspector shall meet all qualification requirements of ASME QEI-1 and shall be certified in accordance with ASME QEI-1. The Contractor shall provide an elevator certificate signed by the inspector for each elevator. The certificate shall be provided to the Contracting Officer within 30 day after the completion of all testing.
   a. Testing Period: Each elevator shall be tested with the specified rated-load in car continuously for a period of 35 percent of the duty time. During the test run the car shall be stopped at all floors in both directions of travel for a standing period of 10 seconds per floor. A manual test of the final limits (UP and DOWN overtravel) shall also be performed.
   b. Speed Load Testing: The actual speed of elevator car in both directions of travel shall be determined with the rated-load and with no-load in the elevator car. Actual measured speed of car with the rated-load in the UP direction shall be within 5 percent of rated speed. The maximum difference in actual measured speeds obtained under the various conditions outlined shall not exceed 10 percent of the total difference between the UP and DOWN speeds.
   c. Car Leveling Testing: Elevator car-leveling devices shall be tested for accuracy of landing at all floors with no-load in car, with symmetrical load in car and with the rated-load in car in both directions of travel.
   d. Temperature Rise Testing: Temperature rise of hydraulic pump motor, motor drive, exciter and booster

shall be conducted during the full-load test run for minimum one hour. Under these conditions, temperature rise of equipment shall not exceed the requirements established in NEMA MG 1 Chapter 12. Test shall be started when all parts of equipment are within the temperature required by NEMA at time of starting tests.

e. Insulation-Resistance Testing: Insulation-resistance testing shall be performed to ensure that the complete elevator wiring systems will be free from short circuits and grounds. Electrical conductors shall have an insulation-resistance of not less than 1 megohm between each conductor and ground, and not less than 1 megohm between each conductor and all other conductors. Prior to testing, provisions shall be made to prevent damage to electronic devices.

6. Framed Instructions: Two sets of instructions shall be typed and framed under glass or in laminated plastic, and posted side-by-side in the elevator room where directed before acceptance of elevator systems. First set of instructions shall include wiring and control diagrams showing the complete layout of elevator system. Second set of instructions shall include the condensed operating instructions describing preventive maintenance procedures, the methods for checking the elevator system for normal safe operation, and the procedures for safely starting and stopping the elevator system.

7. Operator Training: Contractor shall conduct a formal training course for operating Government personnel which shall include care, lubrication, adjustment and maintenance of elevator equipment. Training period shall consist of a total of 8 hours of normal working time and shall start after the system is functionally completed but prior to final acceptance tests. Field instructions shall cover all of the items contained in the operating and maintenance instructions, including demonstrations of routine maintenance operations. Contracting Officer shall be notified at least 14 days prior to date of starting the training course.

DIVISION 15 - MECHANICAL

SECTION 15060 – HANGERS AND SUPPORTS

Scope: 1. Provide hangers and supports for mechanical systems piping and equipment.

References: 1. The publications referenced above (or below) establish minimum requirements for materials, systems and execution which may be specified in this Section.

MANUFACTURERS STANDARDIZATION SOCIETY OF THE VALVE AND FITTINGS INDUSTRY (MSS)

MSS SP-58	Pipe Hangers and Supports – Materials, Design and Manufacture
MSS SP-69	Pipe Hangers and Supports – Selection and Application

Products: 1. Proprietary product names, manufacturers names, and model numbers are given to clarify the designer's intent and are not intended to limit selection of similar products from acceptable manufacturers.

2. Manufacturer:
   a. Carpenter Patterson.
   b. Grinnell.
   c. Michigan Hanger.

3. Hangers and supports shall be in accordance with MSS Standards and manufacturer's published information.

4. Specific support per the following chart:

Hanger/Supports	MSS Type No.
Non insulated pipe hangers	1, 2, 3
Insulated pipe hangers	1, 3, 6, 7, 9, 10, 11
Pipe saddle supports	36, 37
Pipe roller	43, 44, 45, 46
Vertical pipe clamps	8, 42
Concrete inserts	18
Beam clamps	19, 20, 21, 23, 25, 27, 30
Steel brackets	31, 32, 33
Side beam brackets (wood)	34
Protection saddles	39
Protection shields	40, length recommended by mfr.

5. Metal Framing: Complying with NEMA STD ML 1.

6. Steel Plates, Shapes and Bars: Complying with ASTM A 36.

7. Grout: ASTM C 1107, Grade B, 5000 psi strength.

Execution: 1. Maximum hanger spacing and minimum rod size pipe per the following schedule:

Pipe Size	Steel	Copper	Min. Rod Diameter & Max. allow. Load	
½” & ¾”	7’	5’	3/8”	610 lbs.
1” & 1-1/4”	6’	5’	3/8”	610 lbs.
1-1/2”	9’	8’	3/8”	610 lbs.
2”	10’	8’	3/8”	610 lbs.
2-1/2”	11’	9’	½”	1130 lbs.
3” & larger	12’	10’	½”	1130 lbs.
			¾”	2710 lbs.
			7/8”	3770 lbs.

2. Provide hangers for cast iron soil pipe at 5 ft. intervals, except 10 ft. intervals where 10 ft. lengths are used.

3. Provide hangers at 32 inch intervals for plastic pipe.

4. Anchor clamp per the following schedule:

Pipe Size	Clamp Size
1” and smaller	1-1/4” x 3/16”
1-1/4” thru 2-1/2”	1-1/4” x ¼”
3” – 4”	1-1/2” x ¼”
5” – 6”	2” x ¼”

SECTION 15070 – MECHANICAL SEISMIC CONTROL

Scope: 1. Requirements for seismic protection measures included shall be applied to mechanical equipment and systems.

References: 1. The publications referenced above (or below) establish minimum requirements for materials, systems and execution which may be specified in this Section.

U.S. ARMY CORPS OF ENGINEERS (USACE)

TI 809-04 Seismic Design for Buildings

SHEET METAL & AIR CONDITIONING CONTRACTOR'S NATIONAL ASSOCIATION (SMACNA)

Seismic Restraint Manual Seismic Restraint Manual Guidelines for Mechanical Systems

Products:

1. Flexible couplings shall have same pressure and temperature ratings as adjoining pipe.

2. Flexible ball joints shall have cast or wrought steel casing and ball parts capable of 360 degree rotation with not less than 15 degree angular movement.

3. Flexible Mechanical Joints:
   a. Mechanical couplings for steel or cast iron pipe shall be of the sleeve type and shall provide a tight flexible joint under all reasonable conditions, such as pipe movement caused by expansion, contraction, slight settling or shifting of the ground, minor variations in trench gradients, and traffic vibrations.
   b. Sleeve-type couplings shall be used for joining plain-end pipe sections. The coupling shall consist of one steel middle ring, two steel followers, two gaskets, and necessary steel bolts and nuts to compress the gaskets.

4. Manufactured ball joints shall be as recommended by the manufacturer for the intended use, and shall be approved by the Contracting Officer before installation.

5. Sway bracing materials (e.g. rods, plates, rope, angles, etc.) shall be compatible with piping systems.

Execution:

1. Underground piping shall have flexible coupling at entrance to Building.

2. Flexible couplings or points in piping at bottom of risers for pipe larger than 3 inches.

3. Piping supported less than 4 inches apart to include spreaders.

4. Longitudinal and transverse sway braces to be applied to pipe:
   a. Transverse – 2 braces between end joints.
   b. Longitudinal braces at 30 ft. intervals.

5. Vertical runs of piping at minimum 10 ft. intervals.

SECTION 15072 – VIBRATION ISOLATION

Scope:

1. Provide vibration isolation products for mechanical systems and equipment per manufacturer's recommendations and industry standards.

Products:

1. Proprietary product names, manufacturers names, and model numbers are given to clarify the designer's intent and are not intended to limit selection of similar products from acceptable manufacturers.

2. Manufacturer:
   a. Mason Industries Type W.
   b. Peabody Noise Control Inc. Type NPD.
   c. Vibration Eliminator Co. Type 200N.
   d. Vibration Mounting & Controls Shearflex.

3. Equipment Vibration Pads: Pads of corrugated oil resistant neoprene or stabilized fiberglass with neoprene jacket capable of loads up to 50 psi. Where the equipment base doesn't provide a uniform load surface, use a pad with a steel plate bonded to the top.

4. Neoprene-In-Shear Support: Neoprene cylinders with provision for bolting to equipment and structure if required.

5. Spring Mounting: Free standing with sound deadening pads and leveling bolts. Spring diameter-to-compressed operating spring height ratio – 1 to 1. Spring loaded minimum additional available travel – 50% of rated deflection.

6. Neoprene and Spring Support: Combination spring and double deflection neoprene element in series. Spring diameter to compressed operating spring height ratio of 0.8 or greater. Spring loaded minimum additional available travel 50% of rated deflection. Spring diameter and hanger box hole large enough to permit hanger rod to swing through a 30 degree arc before contacting the box.

7. Piping and Equipment Spring Hanger: Combination spring and double deflection neoprene hanger in series. Precompressed by the manufacturer to the rated deflection to keep piping or equipment at a fixed elevation during installation. Spring diameter to compressed operating spring height ratio of 0.8 or greater. Spring loaded minimum additional travel 50% of rated deflection. Spring diameter and hanger box hole large enough to permit hanger rod to swing through a 30 degree arc before contacting the box.

8. Equipment Beams and Rails: Steel support members tailored to cradle the machine, with built-in isolator mounting brackets to minimize equipment mounting height. Minimum beam height-to-length ratio 8% but not less than 4".

9. Air Compressor Braided Hose: Flexible stainless steel hose and braided cover with carbon steel ends. 2-1/2" pipe size and smaller – male nipples. 3" pipe size and larger – 150 pound ASA flanges. Pipe sizes up to and including: 1-1/2" pipe-12" long, 3" pipe-18" long, 6" pipe-24" long, 8" pipe and over-36" long. Use lengths as required. Install horizontally, where possible, on the equipment side of shutoff valves.

10. Neoprene Pump Connector: Flexible neoprene connectors manufactured from multiple plies of nylon tire cord fabric and neoprene. No steel wire or rings for pressure reinforcement. Connector 2" and smaller threaded ends. 2-1/2" and larger – floating steel 150 pound ASA flanges minimum pressure rating 150 psi at 220 degree F connector configuration straight line and 90 degree elbow. Connectors with two sphere design, elbow connectors with one sphere forming for corner of the joint itself.

11. Thrust Restraints: Horizontal thrust restraints consisting of spring element and neoprene pad. Spring diameter minimum .8 of spring operating distance. Minimum additional spring travel before going solid 50% of rated deflection. Spring element preadjusted a factory to limit maximum motion to ¼".

12. Vertical Piping Anchor and Guide Isolators: Acoustical pipe anchor and guide isolators consisting of telescopic arrangement of two sizes steel tubing separated by minimum ½" thickness of heavy duty neoprene and duct or neoprene isolation material. Vertical restraints by similar method to prevent vertical travel in either direction. Allowable loads on the isolation material not to exceed 500 psi with a balanced design for equal resistance in any direction.

13. Ductwork Spring Isolator Hangers: Spring type isolation hangers. Spring diameter minimum .8 of spring operating height. Minimum additional spring travel before going solid 50% of rated deflection. Spring diameter and hanger box lower hole large enough to permit hanger rod to swing through 30 degree arc before contacting box. Spring precompressed at factory by manufacturer. Furnish eye bolts to attachment to ductwork straps.

SECTION 15075 – MECHANICAL IDENTIFICATION

Scope:

1. Provide identification devices for mechanical systems and equipment. Devices shall include the following:
   a. Painted Identification Materials.
   b. Valve Tags.
   c. Valve Schedule with Frames.
   d. Engraved Plastic-Laminate Signs.

References:

1. The publications referenced above (or below) establish minimum requirements for materials, systems and execution which may be specified in this Section.

   AMERICAN NATIONAL STANDARDS INSTITUTE (ANSI)

   ANSI A13.1 Standard for the Identification of Pipes

Products:

1. Proprietary product names, manufacturers names, and model numbers are given to clarify the designer's intent and are not intended to limit selection of similar products from acceptable manufacturers.

2. Manufacturer:
   a. Brady (W.H.) Co., Signmark Div.
   b. Seton Name Plate Corp.

3. Painted Identification Materials
   a. Stencils: Standard fiberboard stencils, prepared for required applications with letter sizes complying with recommendations of ANSI A13.1 for piping and similar applications.
   b. Stencil Paint: Standard exterior type stenciling enamel; black.
   c. Identification Paint: Standard identification enamel of colors scheduled.

4. Valve Tags:
   a. Brass Valve Tags: Provide 1-1/2 inch 18-gauge polis hed brass valve tags for all valves.
   b. Plastic Laminate Valve Tags: Provide manufacturer's standard 3/32" thick engraved plastic laminate valve tags for all valves.
   c. Valve Tag Fasteners: Manufacturer's standard solid brass chain or solid brass S-hooks.

Execution: 1. Provide engraved plastic laminate sign on or near each major item of mechanical equipment and each operational device. Signs to be fastened by mechanical means.

2. Pipe Identification Color: Identify piping with the following color codes:

COLOR	BANDS	FUNCTION	STENCIL WORDING
ORANGE	1	Hot Water Heating Supply	H.W. HTG. SUP.
	2	Hot Water Heating Return	H.W. HTG. RET.
		Hot Water Reheat Supply	H.W. RHT. SUP.
	2	Hot Water Reheat Return	H.W. RHT. RET.
BLUE	1	Domestic Cold Water	C.W. (HARD OR SOFT)
	2	Domestic Hot Water	D.H.W.
	3	Domestic Recirculating Hot Water	REC. H.W.
WHITE	1	Chilled Water Supply	CH. W. SUP.
	2	Chilled Water Return	CH. W. RET.
GOLD	1	Gas	GAS
SILVER	1	Refrigerant Liquid	REF. LIQ.
	2	Refrigerant Gas	REF. GAS
RED	1	Fire Protection	FIRE
GREEN	1	Compressed Air	PSI AIR

SECTION 15080 – MECHANICAL INSULATION

Scope: 1. Provide insulation for all air distribution, hydronic systems, and plumbing systems in building.

References: 1. The publications referenced above (or below) establish minimum requirements for materials, systems and execution which may be specified in this Section.

AMERICAN SOCIETY OF HEATING, REFRIGERATION AND AIR CONDITIONING ENGINEERS (ASHRAE)

ASHRAE 90.1 Energy Efficient Design for New Buildings Except Low-Rise Residential Buildings

AMERICAN SOCIETY FOR TESTING AND MATERIALS (ASTM)

ASTM C 1126 Faced or Unfaced Rigid Cellular Phenolic Thermal Insulation
ASTM C 1136 Flexible, Low Permeance Vapor Retarders for Thermal Insulation
ASTM C 1290 Flexible Fibrous Glass Blanket Insulation Used to Externally Insulation HVAC Ducts
ASTM C 533 Calcium Silicate Block and Pipe Thermal Insulation

ASTM C 534	Preformed Flexible Elastomeric Cellular Thermal Insulation in Sheet and Tubular Form
ASTM C 547	Mineral Fiber Pipe Insulation
ASTM C 552	Cellular Glass Thermal Insulation
ASTM C 553	Mineral Fiber Blanket Thermal Insulation for Commercial and Industrial Applications
ASTM C 591	Unfaced Preformed Rigid Cellular Polyisocyanurate Thermal Insulation
ASTM C 610	Molded Expanded Perlite Block and Pipe Thermal Insulation
ASTM C 612	Mineral Fiber Block and Board Thermal Insulation
ASTM E 84	Standard Test Method for Surface Burning Characteristics of Building Materials

Submittals:

1. Product Data: Submit manufacturer's specifications and installation instructions for each type of mechanical insulation. Submit schedule showing manufacturer's product number, thickness, and furnished accessories for each mechanical system requiring insulation. Data shall be submitted, reviewed, and accepted before installation begins.

Products:

1. Proprietary product names, manufacturers names, and model numbers are given to clarify the designer's intent and are not intended to limit selection of similar products from acceptable manufacturers.

2. Manufacturer:
   a. Armstrong World Industries, Inc.
   b. Knauf Fiberglass.
   c. Owens-Corning Fiberglass Corp.
   d. Kinspon Corp.
   e. Dow Chemical Corp.-

3. Pipe Insulation Materials:
   a. Fiberglass Pipe Insulation: ASTM C-547, Class 1, rigid with integral jacket.
   b. Flexible Unicellular Pipe Insulation: ASTM C 534, Type I.
   c. Phenolic Foam Insulation: ASTM C 1126, Type III, Grade I, with integral vapor barrier jacket, ASJ.
   d. Polyisocyanurote Foam Insulation: ASTM C 591, Type I or Type IV, except thermal conductivity shall not exceed 0.19 BTU in/hr sq ft-deg F. Flame/Smoke to be 25/50 or less up to 1 ½ inch thickness. Provide integral vapor barrier jacket, ASJ.

4. Ductwork Insulation Materials:
   a. Rigid Fiberglass Ductwork Insulation: ASTM C 165, Type 703/AF 530, 3 lbs./cu.ft. rated to 400 degrees F with integral all-service paper backed foil vapor barrier.
   b. Flexible Fiberglass Ductwork Insulation: ASTM C 553, Type II, Class B-6, 1 lb./cu.ft. with integral foil vapor barrier.
   c. High Temperature Mineral Wool Batt Insulation: ASTM C 592.

5. Equipment Insulation Materials:
   a. Rigid Fiberglass Equipment Insulation: ASTM C 165, 3 lbs./cu.ft. rated to 400 degrees F.
   b. Flexible Fiberglass Equipment Insulation: ASTM C 533, Type II, Class B-6, 1-1/2 lbs./cu.ft. Provide vapor barrier for cold equipment.
   c. Flexible Unicellular Equipment Insulation: ASTM C 534, Type II.

6. Underground Insulation Material:
   a. Extruded expanded polystyrene, Styrofoam ASTM C 578-85, type VII, 60 psi compressive strength board insulation.

Execution: 1. Cold Piping and Fittings:

a. Flexible unicellular per following schedule. Install per manufacturer's instructions and industry standards.

b. Cold Pipe Insulation Thickness (inch) (Based on k value of 0.22 to 0.26 per inch). Increase or decrease applied thickness for some insulation value of materials with lower or higher k-value.

		PIPE SIZE (inch)				
SERVICE	**Runouts***	**1 or less**	**1-1/4 to 2**	**2-1/2 to 4**	**5 to 6**	**8 & larger**
Domestic Cold Water***	½	½	½	½	1	1
Chilled Water***** (Interior)	½	½	1	1	1-1/2	1-1/2
Chilled Water***** (Exterior)	N/A	2	2	2	2-1/2	2-1/2
Rainwater Conductor (**) (*****)		½	½	½	1	1
Refrig. Suction**** 40-55 deg F (Interior)	½	1	1	1	1-1/2	1-1/2
Refrig Suction **** 40-55 deg F (Exterior)	N/A	2	2	2	2-1/2	2-1/2
Cooling Coil Drain Pan Waste ***	½	½	½	½	½	1

* Runouts 2 inch pipe size and smaller and 12 ft. long or less.

** Includes drain body, rise to drain, horizontal pipes, and vertical pipes only within 18 inches of drain body.

*** May be phenol. C foam, polyisocyanurate foam, or equal "k" value of flexible unicellular.

**** May be phenolic foam, polyisocyanurate or flexible unicellular, except where exposed to weather it shall be flexible unicellular painted, or metal jacketed phenolic foam or polyisocyanurate.

***** Shall be phenolic foam or polyisocyanurate foam.

2. Hot Piping and Fittings:
   a. Piping schedule hereinafter shall be insulated per same method as specified for cold pipes.
   b. Hot Pipe Insulation Thickness – Fiberglass (inch) (Based on k value of .22 to .26 per inch of 4.0 to 4.6)

		PIPE SIZE (inch)				
FLUID TEMP. RANGE	**Runouts***	**1 or less**	**1-1/4 to 2**	**2-1/2 to 4**	**5 to 6**	**8 & larger**
Heating Systems						
Hot Water Supply & Return						
105 to 140 deg F	0.5	1.0	1.0	1.0	1.5	1.5
141 to 200 deg F	0.5	1.5	1.5	1.5	1.5	1.5
Domestic Hot Water						
105 to 180 deg F (**) (***)	N/A	1.0	1.0	1.5	1.5	1.5

* Runouts except domestic hot water not exceeding 2 inch diameter and not exceeding 12 feet in length to individual terminal units.

** Flexible unicellular acceptable.

*** Insulate non-circulating domestic hot water runouts 2 inch and smaller with ½ inch thickness.

3. Ductwork System Insulation
   a. Insulate the following metal ductwork:
      1) All HVAC system's supply ductwork, except ductwork exposed in conditioned spaces.
      2) HVAC system's return air ductwork, in all nonconditional spaces.
      3) HVAC plenums and unit housings not pre-insulated at factory.
      4) 100% exhaust and relief ductwork 10 ft. from building exit.
      5) Outdoor air intake ductwork and mixed air ductwork between exterior air entrance and supply fan or HVAC unit inlet.
      6) Relief air ductwork between main return duct and relief outlet.
      7) HVAC supply and return ductwork located outside of building (include metal jacket covering).
      8) HVAC supply and return sound attenuators.
      9) Combustion air intake ductwork.
      10) All 100% exhaust or relief ductwork in unheated spaces or attics.
   b. Insulate each ductwork system with one of the following types and thicknesses of insulation:
      1) Rigid fiberglass; 1-1/2 inches thick. Increase thickness to 2 inches in machine, fan and equipment rooms. Supply and return ductwork located in uncooled spaces shall be insulated with 3 inch thickness. Increase insulation to 3 inch thickness on ductwork located outside of building. Protect all ductwork outside of building with PVC jacketing.
      2) Flexible fiberglass; 1-1/2 inch thick. Application limited to concealed locations.
   c. Range hood exhaust duct penetration through a combustible structure shall be protected with a 22 gauge sheet metal sleeve insulated with 1 inch mineral wool batt.

4. Equipment Insulation:
   a. Hot and Cold Equipment: Insulate the following hot and cold equipment.
      1) Water chillers (insulate in accordance with manufacturer's instructions).
      2) Refrigeration equipment.
      3) Drip pans under cooling coils equipment.
      4) Chilled and hot water expansion tanks.
      5) Air separators.
      6) Chilled and hot water pumps.
      7) Domestic water booster pumps.

8) Boilers (not pre-insulated at factory).
9) Duct mounted reheat coils.

b. Insulate each item of equipment specified above with 2 inch thick fiberglass.

c. Surfaces of cold equipment to be insulated with 1 inch thickness of flexible unicellular insulation.

5. High Temperature Equipment and Materials:

a. Application Requirements: Insulate the following high temperature equipment and materials:

1) Breechings between heating equipment outlet and stack or chimney connection (except for factory insulated breechings).
2) Stacks (except for triple wall or factory insulated stacks).
3) Emergency generator exhaust pipe and muffler.

b. Insulate each item specified above except emerging generator exhaust components with high temperature fiberglass 3 inch thick, with temperature rating suitable for system temperatures.

c. Insulate emerging generator exhaust with ceramic fiber insulation specifically rated for temperatures in excess of 1200 degree F. Insulate minimum 4 inches thick.

SECTION 15105 - PIPING

Scope: 1. Provide piping for hot water heating, chilled water, domestic water, natural gas, sanitary drainage, and storm drainage systems.

References: 1. The publications referenced above (or below) establish minimum requirements for materials, systems and execution which may be specified in this Section.

AMERICAN SOCIETY FOR TESTING AND MATERIALS (ASTM)

ASTM A 105/A 105M	Carbon Steel Forgings for Piping Applications
ASTM A 47/A 47M	Ferritic Malleable Iron Castings
ASTM A 53/A 53M	Pipe, Steel, Black and Hot-Dipped, Zinc-Coated, Welded and Seamless
ASTM A 74	Cast Iron Soil Pipe and Fittings
ASTM B 88	Seamless Copper Water Tube
ASTM D 2241	Poly(Vinyl Chloride) (PVC) Pressure-Rated Pipe (SDR Series)
ASTM D 2661	Acrylonitrile-Butadiene-Styrene (ABS) Schedule 40 Plastic Drain, Waste, and Vent Pipe and Fittings

ASME INTERNATIONAL (ASME)

ASME B16.18	Cast Copper Alloy Solder Joint Pressure Fittings
ASME B16.29	Wrought Copper and Wrought Copper Alloy Solder Joint Drainage Fittings – DWV
ASME B31.1	Power Piping
ASME B31.5	Refrigeration Piping

CAST IRON SOIL PIPE INSTITUTE (CISPI)

CISPI 301	Hubless Cast Iron Soil Pipe and Fittings for Sanitary and Storm Drain, Waste, and Vent Piping Applications
CISPI 310	Coupling for Use in Connection with Hubless Cast Iron Soil Pipe and Fittings for Sanitary and Storm Drain, Waste, and Vent Piping Applications

NATIONAL FIRE PROTECTION ASSOCIATION (NFPA)

NFPA 54 National Fuel Gas Code

Submittals: 1. Submit shop drawings and include a copy of shop drawings in O&M Manuals.

Products: 1. Black Steel Pipe and Galvanized Steel Pipe: ASTM A 53 A 105, Standard Schedule.

2. Copper Pipe and Tube: ASTM B 88 Type L and K.
   a. Fittings: ASME B 16.18, 16.26.

3. Cast Iron Pipe:
   a. Hubless cast iron soil pipe, CISPI 301 with coupling CISPI 310.

4. Plastic Pipe:
   a. Polyvinyl Chloride, ASTM D 2665.
   b. Acrylonitrile – Butadiene – Styrene (ABS), ASTM D 2661.

5. Grooved End Steel Pipe: ASTM A 53:
   a. Fittings: Malleable iron ASTM A 47.
   b. Ductile iron ASTM A 536.

6. Ductile Iron Pipe: ASME C 151.
   a. Fittings: ASME C 104.

Execution: 1. Services:
   a. Black Steel:
      1) Natural gas (inside building).
      2) Hot water heating.
      3) Chilled water.
   b. Galvanized Black Steel:
      1) Natural gas (exterior and above grade).
   c. Type L Copper Pipe:
      1) Hot water heating 3 inches and less.
      2) Domestic hot and cold water (inside building).
      3) Hot water heating run-outs to duct and variable volume terminal unit reheat coils.
      4) Compressed air.
      5) Cooling coil drain pan condensate piping.
   d. Type K. Copper Pipe:
      1) Domestic cold water (below grade or in concrete slab) 3 inches and less.
      2) Refrigerant. (Type ACR copper also acceptable.)
   e. Hubless Cast Iron Pipe:
      1) Storm water drainage 10 inches and less.
      2) Above ground drain, waste and vent 10 inches and less.
   f. Grooved End Pipe:
      1) Hot water heating 3 inches and larger.
      2) Chilled water 3 inches and larger.
   g. Ductile Iron Pipe:
      1) Underground water service larger than 3 inches.

SECTION 15110 – VALVES

Scope: 1. Provide valves for hot water heating, chilled water, domestic water, and natural gas systems.

References: 1. The publications referenced above (or below) establish minimum requirements for materials, systems and execution which may be specified in this Section.

ASME INTERNATIONAL (ASME)

ASME B31.1 Power Piping
ASME B 31.9 Building Services Piping

MANUFACTURERS STANDARDIZATION SOCIETY OF THE VALVE AND FITTINGS INDUSTRY (MSS)

MSS SP-67 Butterfly Valves
MSS SP-70 Cast Iron Gate Valves, Flanged and Threaded Ends
MSS SP-71 Gray Iron Swing Check Valves, Flanges and Threaded Ends
MSS SP-72 Ball Valves with Flanged or Butt-Welding Ends for General Service
MSS SP-80 Bronze Gate, Globe, Angle and Check Valves
MSS SP-85 Cast Iron Globe & Angle Valves, Flanged and Threaded Ends

Submittals: 1. Product Data: Including body material, valve design, pressure and temperature classification, end connection details, seating materials, trim material and arrangement, dimensions and required clearances, and installation instructions.

Products: 1. Gate Valves 2 Inch and Smaller: Class 150, solid disc, copper silicon alloy stem brass packing gland, Teflon impregnated packing.

2. Gate Valves 2-1/2 Inch and Larger: Class 125, flanged ends, solid disc, Teflon impregnated packing.

3. Ball Valves: 150 psi, full port chrome plated brass ball, Teflon seats and seals. Solder ends for cold service, threaded for hot water service.

4. Plug Valves 2 Inch and Smaller: 150 psi, lubricated plug, semi-steel body, threaded ends.

5. Plug Valves 2-1/2 Inch and Larger: 175 psi lubricated plug type, semi-steel body, flanged ends.

6. Globe Valves 2 Inch and Smaller: Class 150, threaded ends, copper silicon alloy stem, Teflon impregnated packing.

7. Globe Valves 2-1/2 Inch and Larger: Class 125, OSY bronze mounted, Teflon impregnated packing.

8. Butterfly Valves 3 Inch and Larger: 200 psi cast iron body, EPDM liner, nickel plated ductile iron or aluminum bronze disc, stainless steel stem, lug body, bubble tight shut-off, suitable for dead-end service.
   a. Lever operators with locks.

9. Swing Check Valves 2 Inch and Smaller: Class 150, horizontal swing, pattern with bronze disc, threaded ends.

10. Swing Check Valves 2-1/2 Inch and Larger: Class 125 with bronze disc, flanged ends.

11. Wafer Check Valves: Class 250, cast iron body, stainless steel trim, lapped bronze seat.

a. Stainless steel torsion spring.

12. Lift Check Valves 2 Inch and Smaller: Class 125, cast iron body, stainless steel spring, Teflon disc, threaded ends.

Execution: 1. Services:
a. Ball Valves – Shutoff and Balancing:
1) Domestic cold, hot and recirculating water piping 3” and smaller.
2) Water supply fill and makeup connections from domestic water system.
3) Hot water heating piping 3” and smaller.
4) Chilled water piping 3” and smaller.
b. Cast Iron Gate Valves – Shutoff:
1) Chilled water piping larger than 3”.
2) Hot water heating piping larger than 3”.
3) Domestic cold, hot and recirculating pipe larger than 3”.
c. Globe Valves – Throttling:
1) Chilled water piping larger than 3”.
2) Hot water heating piping larger than 3”.
3) Domestic cold, hot and recirculating pipe larger than 3”.
d. Butterfly Valves - Shutoff:
1) Chilled water piping larger than 3”. (Option)
2) Hot water heating piping larger than 3”. (Option)
e. Check Valves – Swing – Horizontal Piping:
1) Domestic cold, hot and recirculating water piping.
2) Hot water heating piping.
3) Chilled water piping.
f. Plug Valves - Balancing:
1) Hot water heating piping larger than 3”.
2) Chilled water piping larger than 3”.
g. Check Valves – Wafer and Lift:
1) Vertical piping – same services as horizontal check valves.

SECTION 15120 – PIPING SPECIALTIES

Scope: 1. Provide piping specialties for mechanical systems. Piping specialties shall include meters, gages, air separators, strainers, hydronic flow measuring and balancing devices, expansion tanks, combination valves, and shot feeders.

References: 1. The publications referenced above (or below) establish minimum requirements for materials, systems and execution which may be specified in this Section.

ASME INTERNATIONAL (ASME)

ASME B 31.9 Building Services Piping

Submittals: 1. Submit shop drawings and include a copy of shop drawings in O&M Manuals.

Products: 1. Proprietary product names, manufacturers names, and model numbers are given to clarify the designer’s intent and are not intended to limit selection of similar products from acceptable manufacturers.

2. Manufacturer - Flow Measuring and Balancing Devices:
a. Barco.

b. Bell & Gossett.
c. Gerand Engineering.

3. Manufacturer – Pump Suction Diffusers and Combination Balancing, Check and Shut-Off Valves:
   a. Bell and Gossett.
   b. Taco.

4. Flow Measuring and Balancing Devices:
   a. Pipe Size 3 Inch and Smaller: Combination flow measuring and balancing.
   b. Pipe Size Larger than 3 Inches: Separate measuring device together with plug valve.
   c. Venturi type measuring devices for flow over 7 gpm; orifice or venturi for flows less than 7 gpm.

5. Combination Balancing, Check and Shutoff Valves: Do not use. Use separate non-slam check valve with spring loaded disc, separate balancing valve, and a cCast iron valve body rated for 175 psi.

6. NOT USED

7. Dial Thermometers: Brass, with glass lens, silicone filled, 4-1/2 inch diameter complying with ASME B 40.3. Accuracy +/- 1% of full scale.
   a. Hot Water Range: 30 deg. F to 300 deg. F.
   b. Chilled Water Range: 0 deg. F to 100 deg. F.

8. Temperature and Pressure Connector Plugs: Brass with nickel plate finish, rated for 800 psi and 200 deg. F.

9. Pressure Gages: 316 SS bourdon type, 316 s/s case, liquid filled with 4-1/2 inch diameter glass lens, complying with ASME B 40.1, Grade 1A accuracy +/- 1% of full scale.
   a. Range: 0 to 100 psi.

10. Y-Strainers: 125 psi rated, cast iron body, type 304 stainless steel screens.
    a. Provide blow down fitted with pipe plug.

11. Air Separators: 125 psi rated inline type. Cast iron body for 1-1/2 inch and smaller; steel for 2 inch and larger.
    a. Conformance with National Board Form UL-1.

12. Expansion Tanks: Diaphragm type constructed of welded steel. Tested and stamped in accordance with Section VIII, Division 1 of ASME Boiler and Pressure Vessel Code for 125 psi working pressure.

13. Pump Suction Diffusers: Angle pattern cast iron, rated for 175 psi. 3/16” diameter openings in strainer.

14. Shot Feeders: 2 gallon capacity, cast iron or steel body, 125 psi rating.

SECTION 15130 – PUMPS

Scope: 1. Includes inline, vertical inline, and base mounted end suction pumps.

References: 1. The publications referenced above (or below) establish minimum requirements for materials, systems and execution which may be specified in this Section.

HYDRAULIC INSTITUTE (HI)

HI 1.1-1.5 Centrifugal Pumps

NATIONAL ELECTRICAL MANUFACTURERS ASSOCIATION (NEMA)

NEMA 250 Enclosures for Electrical Equipment (1000 Volts Maximum)

Submittals:

1. Product Data: Submit manufacturer's pump specifications, installation and start-up instructions, and current accurate pump characteristic performance curves with selection points clearly indicated.

2. Operation and Maintenance Manuals.

Products:

1. Proprietary product names, manufacturers names, and model numbers are given to clarify the designer's intent and are not intended to limit selection of similar products from acceptable manufacturers.

2. Manufacturer:
   a. Amtrol Inc.
   b. Armstrong Pumps, Inc.
   c. Bell & Gossett ITT; Fluid Handling Div.
   d. Dunham-Bush, Inc.
   e. Grundfos Pumps Corps.
   f. Taco, Inc.

3. In-Line Circulator Pumps
   a. Horizontal mount, radially split case, oil-lubricated, designed for 125 psi working pressure, and 225 deg. F (107 deg. C) continuous water temperature.
   b. Body: Cast iron, with suction and discharge gauge tappings.
   c. Shaft: Hardened alloy steel.
   d. Bearings: Oil-lubricated bronze journal bearings.
   e. Seal: Mechanical, with carbon seal ring and ceramic seat.
   f. Motor: Non-overloading at any point on pump curve, open, drip-proof, oil-lubricated journal bearings, resilient mounted construction, built-in thermal overload protection on single phase motors.
   g. Couplings: Self-aligning, flexible couplings.
   h. Impeller: ASTM B 584, cast bronze, hydraulically and dynamically balanced, and keyed to shaft.
4. Vertical In-Line Circulator Pumps:
   a. Vertical, in-line, centrifugal, flexible-coupled, single-stage, radially split case design. Include vertical-mounting, bronze-fitted design and mechanical seals rated for 125-psig (860-kPa) minimum working pressure and a continuous water temperature of 225 deg F (107 deg C).
   b. Body: Cast iron, with threaded companion flanges, drain plug at low point of volute, and threaded gage tappings at inlet and outlet connections.
   c. Impeller: ASTM B 584, cast bronze, statically and dynamically balanced, closed, overhung, single suction, and keyed to shaft.
   d. Shaft: Ground and polished stainless-steel shaft with bronze sleeve.
   e. Seals: Mechanical, with carbon-steel rotating ring, stainless-steel spring, ceramic seat, and flexible bellows and gasket.
   f. Motor: Non-overloading at any point on pump curve, open drip-proof, oil lubricated bearings. Directly mounted to pump casing and with lifting and supporting lugs in top of motor enclosure.
5. Base-Mounted End Suction Centrifugal Pumps:
   a. Horizontal mount, single stage, overhung impeller, designed for 175 psi working pressure.
   b. Casing: Cast iron, 125 psi ANSI flanges, tappings for gauge and drain connections.
   c. Shaft: Steel with replaceable shaft sleeve.
   d. Seal: Mechanical, with carbon seal ring and ceramic seat.
   e. Motor: Open, Drip-proof, regreasable ball bearings.
   f. Impeller: ASTM B 584, cast bronze, hydraulically and dynamically balanced, keyed to shaft and secured with locking screw.

SECTION 15150 – SANITARY, WASTE, VENT, AND STORM SPECIALTIES

Scope: 1. Includes sanitary and storm drainage piping system specialties.

References: 1. The publications referenced above (or below) establish minimum requirements for materials, systems and execution which may be specified in this Section.

ASME INTERNATIONAL (ASME)

ASME A112.14.1	Backwater Valves
ASME A112.21.1M	Floor Drains
ASME A112.21.2M	Roof Drains
ASME A112.36.2M	Cleanouts

INTERNATIONAL CODE COUNCIL (ICC)

ICC Plumbing Code	International Plumbing Code (IPA)

Submittals: 1. Submit shop drawings and include a copy of shop drawings in O&M Manuals.

Products: 1. Proprietary product names, manufacturers names, and model numbers are given to clarify the designer's intent and are not intended to limit selection of similar products from acceptable manufacturers.

2. Manufacturer – Drainage System Specialties:
   a. Ancon Inc.
   b. Josam Mfg. Co.
   c. Smith (Jay R.) Mfg. Co.
   d. Tyler Pipe Industry.
   e. Wade Div. Tyler Pipe.
   f. Watts Drainage Products.
   g. Zurn Industries, Inc.

3. Manufacturer – Trench Drain Systems:
   a. ACO Polymer Products, Inc.
   b. MEA/Josam.
   c. Polydrain Inc.
   d. Quazite Corp.
   e. Zurn Flo-Thru.

4. Special Valves:
   a. General: Special valves required for drainage piping systems include the following types:
      1) Backwater Valves: Cast-iron body, bronze combination backwater and shear gate assembly. Provide ends to suit piping material; top extension, removable hand wheel; bolted cover.

3. Drainage System Specialties:
   a. Vent Flashing: Provide vent flashing of same manufacture and compatible with the roofing system.
   b. Cleanout Plugs: Cast-bronze or brass, threads complying with the Code.
   c. Floor Cleanouts: Cast-iron body and frame; cleanout plug; adjustable round top.
      1) Nickel-Bronze Top: Flush, scoriated style. Use in floors in "finished" rooms.
      2) Cast-Iron Top: Flush scoriated. Use in floors in "non-finished" rooms - mechanical equipment rooms, storage rooms, etc.

d. Wall Cleanouts: Cast-iron body adaptable to pipe with cast-bronze or brass cleanout plug; stainless steel cover including screws.
e. Floor Drains: Provide floor drains and shower drains. All floor drains shall be provided with trap primers.
   1) Floor drains in finished floors, other than troweled concrete, and in showers and janitor's receptors, with Nikaloy strainer.
   2) Floor drains in finished floors, marked BWV shall be same as above except with backwater valve.
   3) Floor drains in troweled concrete with clamping ring and cast-iron top.
f. Roof Drains: Provide roof drains as specified herein.
   1) Roof drain shall be cast-iron body and combined flashing collar and gravel stop, aluminum dome, with the following features:
      a) Underdeck clamp.
      b) Extension for roof deck insulation. Extension shall be 2" less than roof deck insulation thickness.
      c) Sump receiver.
      d) Expansion joint.
      e) Vandal-proof dome.
      f) Bottom outlet, inside calk.
g. Downspout Nozzle: Rough bronze body with threaded inlet and loose flange.

4. Trench Drains:
   a. Trench drain gutters shall be precast pre-sloped interlocking polymer concrete trench drain system 4" channel width with flush slotted formed galvanized steel grating rated for loads of 10 ton wheel load at slow to moderate speed.

SECTION 15410 – PLUMBING FIXTURES

Scope: 1. Provide plumbing fixtures. Coordinate rough-in and final fixture connection. Install fixtures at heights indicated by the Architect and in accordance with the Code.

Submittals: 1. Submit shop drawings and include a copy of shop drawings in O&M Manuals.

Products: 1. Proprietary product names, manufacturers names, and model numbers are given to clarify the designer's intent and are not intended to limit selection of similar products from acceptable manufacturers.

2. Manufacturers:
   a. Vitreous China and Enameled Cast Iron Fixtures: American Standard, Eljer, Kohler.
   b. Trim: American Standard, Chicago Faucet, Delta-Delux, Elkay, Josam, Kohler, Speakman, Stern, Symmons, T & S Brass, Zurn.
   c. Water Closet Seats: American Standard, Bemis, Beneke, Church, Kohler, Olsonite.
   d. Chair Carriers: Josam, Jay R. Smith, Wade, Watts, Zurn.
   e. Stainless Steel Sinks: Elkay, Just.
   f. Shower Heads/Fittings: American Standard, Chicago Faucet, Delta-Delux, Eljer, Kohler, Leonard, Speakman, Symmons.
   g. Water Coolers/Drinking Fountains: Elkay, Halsey Taylor, Haws, Oasis.
   h. Flush Valves: Aquavantage, Sloan, Zurn.
   i. Service Sinks (Cast Iron): American Standard, Kohler.
   j. Service Receptors; Laundry Tubs: Fiat, Jonespec, Mustee, Stern Williams, Swan, Zurn.
   k. Safety Showers/Emergency Eyewash: Bradley, Chicago Faucet, Encon, Guardian, Haws, Speakman.
   l. Interior Hose Bibbs and Mixing Faucets: Chicago Faucet, T & S Brass, Zurn.
   m. Exterior Wall Hydrants and Wall Faucets: Josam, Jay R. Smith, Wade, Woodford, Zurn.
   n. Thermostatic Mixing Valves: Guardian, Leonard, Powers, Symmons.
   o. ADA Insulation Kit: Handi Lavguard, Plumberex, Truebro.

3. Plumbing Fixtures and Trim:
   a. Lavatories: Wall hung or countertop lavatory, white vitreous china with backsplash, 4” faucet centers. Single lever handle faucet, 0.5 gpm aerator, grid, stops, supplies, and ADA insulation kit.
   b. Water Closets: Wall hung vitreous china elongated water closet, top spud, flush valve, open front black seat.
   c. Urinals: Wall hung vitreous china urinal, top spud, flush valve.
   d. Cabinet Shower: Free-standing fiberglass reinforced plastic stall, terrazzo or plastic receptor, curtain rod, trim, pressure balancing mixing valve and shower head.
   e. Water Coolers: Wall hung single height water cooler, self-contained. The unit shall be complete with cabinet, mounting frame, push bar controls, stainless steel bowl, bubbler, refrigeration system, air cooled. Cabinet shall be stainless steel.
   f. Sinks: Single/two-compartment, self-rimmed, stainless steel sink, faucet, aerator, strainer, P-trap, tailpiece, supplies, stops, all chrome plated.
   g. Washfountain: Semi-circular 3-, 4-, 5-station ADA compliant, stainless steel bowl, access panel, spray head, factory pre-piped.
   h. Service Receptor: Enameled cast iron floor mounted receptor. 28” x 28” square, faucet with pail hook, atmospheric vacuum breaker spout. 5’-0” length of hose and fittings.
   i. Emergency Shower/Eyewash: Floor mounted combination emergency shower/eyewash, with 10” shower heads, and bowl for eyewash. Stainless steel pullrod, stainless steel push flag, tailpiece, supplies, stops, and P-trap. Provide tempering valve for blending water.
   j. Interior Hose Bibb: Chrome plated hose bibb with vacuum breaker, hose thread outlet, lock shield cap and removable handle. Shutoff valve in cold water line.
   k. Interior Mixing Faucet: Chrome plated inside mixing faucet with vacuum breaker, hose thread outlet, pail hook, and adjustable side arms. Shutoff valve in hot and cold water lines.
   l. Exterior Wall Hydrant: Non-freeze type wall hydrant, spout with backflow preventor, loose key, hose thread outlet, chrome plated. Provide shutoff valve in cold water line.

SECTION 15440 – PLUMBING PUMPS

Scope: 1. Provide plumbing pumps associated with plumbing systems.

References: 1. The publications referenced above (or below) establish minimum requirements for materials, systems and execution which may be specified in this Section.

HYDRAULIC INSTITUTE (HI)

HI 1.1-1.5 Centrifugal Pumps

NATIONAL ELECTRICAL MANUFACTURERS ASSOCIATION (NEMA)

NEMA 250 Enclosures for Electrical Equipment (1000 Volts Maximum)

Submittals: 1. Shop Drawings: Detail assemblies and indicate dimensions, weights, loads, required clearances, method of field assembly, components, and location and size of each field connection.
   a. Wiring Diagrams: Power, signal, and control wiring. Differentiate between manufacturer-installed and field-installed wiring.

2. Product Data: For each type and size. Include rated capacities; performance curves; furnished specialties; shipping, installed, and operating weights; and accessories.

3. Operation and Maintenance Manuals.

Products: 1. Proprietary product names, manufacturers names, and model numbers are given to clarify the designer's intent and are not intended to limit selection of similar products from acceptable manufacturers.

2. Manufacturer:
   a. Aurora Pump Co.
   b. Bell & Gossett.
   c. Hydromatic.
   d. Peabody Barnes.
   e. Weil Pump Co.
   f. Weinman Pump LFE Corp.
   g. Zoeller.

3. Inline Recirculation Pumps:
   a. Horizontal, oil lubricated, 125 psi working pressure, 225 degrees continuous water temperature. Bronze or stainless steel construction, steel shaft, mechanical seal, aquastat, and timeclock.

4. Submersible Sump Pumps:
   a. Cast iron shell, bronze impeller, stainless steel shaft, ceramic mechanical seal, factory sealed lubricated ball bearings. Hermetically sealed motor with overload protection. Wide differential float operated mercury switch for Simplex pump controls. NEMA 250, Type 1 enclosure, with three (3) mercury float switches in NEMA 250, Type 6 enclosures for Duplex pump controls, and fiberglass sump.

SECTION 15480 – DOMESTIC WATER HEATERS

Scope: 1. Provide commercial gas water heaters associated with plumbing systems.

References: 1. The publications referenced above (or below) establish minimum requirements for materials, systems and execution which may be specified in this Section.

AMERICAN NATIONAL STANDARDS INSTITUTE (ANSI)

ANSI Z21.10.11.021	Gas Water Heaters Vol. I, Storage Water Heaters with Input Ratings of 75,000 Btu Per Hour or Less
ANSI Z21.10.3	Gas Water Heaters Vol. III, Storage Water Heaters With Input Ratings Above 75,000 Btu Per Hour, Circulating and Instantaneous Water Heaters
ANSI Z21.22	Relief Valves and Automatic Gas Shutoff Devices for Hot Water Supply Systems

AMERICAN SOCIETY OF HEATING, REFRIGERATING AND AIR-CONDITIONING ENGINEERS (ASHRAE)

ASHRAE 90.1	Energy Efficient Design for New Buildings Except Low-Rise Residential Buildings

AMERICAN SOCIETY OF SANITARY ENGINEERING (ASSE)

ASSE 1005	Water Heater Drain Valves – ¾ Inch Iron Pipe Size

ASME INTERNATIONAL (ASME)

ASME Boiler and Pressure Vessel Code: "Pressure Vessels", Division 1

ASME BPV IX	Boiler and Pressure Vessel Code; Section IX, Welding and Brazing Qualifications
ASME B1.20.1	Pipe Threads, General Purpose (Inch)
ASME B1.20.3	Dry Seal Pipe Threads
ASME CSD-1	Controls and Safety Devices for Automatically Fired Boilers\

NATIONAL ELECTRICAL MANUFACTURERS ASSOCIATION (NEMA)

NEMA 250	Enclosures for Electrical Equipment (1000 Volts Maximum)

NATIONAL FIRE PROTECTION ASSOCIATION (NFPA)

NFPA 54	National Fuel Gas Code
NFPA 70	National Electrical Code

NSF INTERNATIONAL (NSF)

NSF 61	Drinking Water System Components – Health Effects (Sections 1-9)

Submittals:

1. Shop Drawings: Detail assemblies and indicate dimensions, weights, loads, required clearances, method of field assembly, components, and location and size of each field connection.
   a. Wiring Diagrams: Power, signal, and control wiring. Differentiate between manufacturer-installed and field-installed wiring.

2. Product Data: For each type and size. Include rated capacities; performance curves; furnished specialties; shipping, installed, and operating weights; and accessories.

3. Operation and Maintenance Manuals.

Warranty:

1. Furnish three (3) year limited warranty for tank leakage.

Products:

1. Proprietary product names, manufacturers names, and model numbers are given to clarify the designer's intent and are not intended to limit selection of similar products from acceptable manufacturers.

2. Manufacturer – Commercial Gas-Fired Water Heaters:
   a. Ace Buehler, Inc.
   b. A.O. Smith, Consumer Products Div.
   c. Bradford-White.
   d. Lochinvar.
   e. PVI Industries, Inc.
   f. Rheem Water Heater Div., City Investing Co.
   g. Ruud Water Heater Div., City Investing Co.
   h. State Industries.

3. Manufacturer – Stack Dampers:
   a. Ameritherm.
   b. Heat-Napper.
   c. Johnson Control Co.

4. Gas Fired Water Heaters:
   a. Gas fired water heater, 150 psi working pressure, boiler type hand hole cleanout, magnesium anode rod, ¾" tapping for relief valve, glass lining, automatic gas shutoff, pilot safety shutoff, AGA certified draft

hood or forced draft, or direct vented. Insulate tank with vermin-proof glass fiber insulation, baked enamel finish on outer jacket. Provide drain valve, pressure and relief valve, gas pressure regulator, pilot gas regulator, and thermostat. Furnish three (3) year limited warranty. Comply with ASHRAE 90.1 for energy efficiency. Storage tank shall be ASME Standard for the working pressure.

5. Stack Damper for Water Heater Vent:
   a. Damper: Provide a thermally actuated damper with bi-metallic damper. AGA approval required.

6. Expansion Tanks:
   a. Steel, pressure rated tank construction, butyl-rubber diaphragm, air precharge, 150 psi working pressure.
   b. Comply with ASME B1.20.3 and NSF 61 construction requirements.

SECTION 15510 – HEATING BOILERS AND ACCESSORIES

Scope: 1. Includes gas fired hot water boilers for hot water heating systems.

References: 1. The publications referenced above (or below) establish minimum requirements for materials, systems and execution which may be specified in this Section..

AMERICAN NATIONAL STANDARDS INSTITUTE (ANSI)

ANSI Z21.13	Gas-Fired Low-Pressure Steam and Hot Water Boilers

ASME INTERNATIONAL (ASME)

ASME BPV IV	Boiler and Pressure Vessel Code; Section IV, Heating Boilers
ASME BPV IX	Boiler and Pressure Vessel Code; Section IX, Welding and Brazing Qualifications
ASME BPV VIII Div 1	Boiler and Pressure Vessel Code; Section VIII, Pressure Vessels Division 1 – Basic Coverage
ASME CSD-1	Controls and Safety Devices for Automatically Fired Boilers

HYDRONICS INSTITUTE DIVISION OF GAMA (HYI)

HYI-01	I=B=R Ratings for Boilers, Baseboard Radiation and Finned Tube (Commercial) Radiation

NATIONAL FIRE PROTECTION ASSOCIATION (NFPA)

NFPA 211	Chimneys, Fireplaces, Vents, and Solid Fuel-Burning Appliances
NFPA 54	National Fuel Gas Code

UNDERWRITERS LABORATORIES (UL)

UL Gas & Oil Dir	Gas and Oil Equipment Directory

Submittals:

1. Shop Drawings: Detail equipment assemblies and indicate dimensions, required clearances, method of field assembly, components, and size of each field connection.
   a. Provide wiring diagrams for power, signal and control systems, and differentiate between manufacturer installed and field wiring.

2. Product Data: Submit manufacturer's technical product data, including rated capacities of selected model indicated, weights (shipping, installed, and operating), furnished specialties and accessories, and installation, start-up instructions, and warranty data.

3. Maintenance Data: Submit maintenance data and parts list for each boiler, control, and accessory; including "trouble-shooting" maintenance guide. Include this data and product data in maintenance manual.

4. Field Test Reports: Indicate and interpret test results for compliance with performance requirements.

Warranty:

1. Furnish manufacturer’s standard, but not less than ten (10) year warranty from date of substantial completion.

Training:

1. Provide training for maintenance and operations personnel.

Products:

1. Proprietary product names, manufacturers names, and model numbers are given to clarify the designer’s intent and are not intended to limit selection of similar products from acceptable manufacturers.

2. Manufacturer:
   a. Bryan Steam Corp.
   b. Hydrotherm, Inc.
   c. Peerless Heater Co., The, Div. of Peerless Industries, Inc.
   d. Smith Co., Inc., H.B., The.
   e. Weil-McLain, A Marley Co.
   f. Cleaver Brooks.

3. Cast Iron Boilers:
   a. Factory assembled packaged (atmospheric, forced draft) cast iron gas fired boilers.
   b. Cast iron sections set on insulated steel base, insulated jacket.
   c. Aluminized steel burners, stainless steel radiation plates, 100% shutoff.
   d. 40 psig water pressure rating.
   e. Design/Build Contractor will install proper percentage of glycol anti-freeze as required for specific site outdoor design conditions; applicable system use; and in accordance with glycol manufacturer’s recommendations for application freeze or burst protection.
   f. Boiler Trim:
      1) ASME safety relief valve, combination water pressure and temperature gage, low water cutoff, factory assembled electric control, and electronic operating temperature controller.
   g. Natural gas forced draft type gas burner, and safety controls.
   h. Boiler Management Control System:
      1) Computer-based controller with nonvolatile memory and solid-state sensors. Controller consists of chassis, program module, keyboard display, and flame signal amplifier.
   i. Control Panel:
      1) Motor controllers, relays, and control switches factory assembled in NEMA 250, Type 1A enclosure.

SECTION 15550 – DIRECT-FIRED MAKEUP AIR UNITS

Scope: 1. Provide packaged indoor direct gas fired makeup air units to meet project requirements.

References: 1. The publications referenced above (or below) establish minimum requirements for materials, systems and execution which may be specified in this Section.

AMERICAN NATIONAL STANDARDS INSTITUTE (ANSI)

ANSI Z83.4	Direct Gas-Fired Make-Up Air Heaters

INTERNATIONAL APPROVAL SERVICES (IAS)

IAS Directory	IAS Directory of AGA and CGA Certified Appliances and Accessories

NATIONAL ELECTRICAL MANUFACTURERS ASSOCIATION (NEMA)

NEMA MG1	Motors and Generators

NATIONAL FIRE PROTECTION ASSOCIATION (NFPA)

NFPA 54	National Fuel Gas Code

UNDERWRITERS LABORATORIES (UL)

UL Gas & Oil Dir	Gas and Oil Equipment Directory

Submittals: 1. Product Data: Submit manufacturer's technical product data for makeup air units showing dimensions, weights, capacities, ratings, fan performance with operating point clearly indicated, motor electrical characteristics, gages and finishes of materials, and installation instructions. Provide burner, fan, and other component removal and replacement clearance requirements.

2. Wiring Diagrams: Submit manufacturer's electrical requirements for power supply wiring to makeup air units. Submit manufacturer's ladder-type wiring diagrams for interlock and control wiring. Clearly differentiate between portions of wiring that are factory-installed and portions to be field-installed.

3. Maintenance Data: Submit maintenance instructions, including instructions for lubrication, filter replacement, motor and drive replacement, and spare parts lists. Include this data, product data, shop drawings, and wiring diagrams in maintenance manuals.

Products: 1. Proprietary product names, manufacturers names, and model numbers are given to clarify the designer's intent and are not intended to limit selection of similar products from acceptable manufacturers.

2. Manufacturer:
   a. Hartzell Fan, Inc.
   b. Lennox Industries, Inc.
   c. Modine Manufacturing Co.
   d. Reznor/Thomas & Betts.
   e. Sterling Gas-Fired Heating Equipment Div.

3. Direct-Fired Makeup Air Furnace:
   a. Provide gas-fired packaged factory-assembled, pre-wired, self-contained unit. Minimum 0.052 inch (1.3 mm) thick, galvanized steel panels, formed to ensure rigidity. Factory-applied, neoprene-faced, glass-fiber insulated, 1 inch (25 mm) thick, applied on complete unit.
   b. Burners: Capable of modulating turndown ratio of 25:1, including electric-modulating main gas valve, motorized shutdown valve, main and pilot gas regulators, pilot electric gas valve, manual shutoff valve, and pilot adjustment valve. Provide control and gas train to meet Code.
      1) Pilot: Electrically ignited by spark rod through high-voltage ignition transformer.
      2) Safety Controls: Factory installed sensors verify correct airflow before energizing pilot and sense pilot ignition before activating main gas valve.
      3) Manual Reset, Low- and High-Limit Controls: Maintain supply air temperature between set points, and shut fan down if temperatures are exceeded.
      4) Purge-Period Timer: Automatically delays burner ignition and bypasses low-limit control.
   c. Description: Rated according to AMCA 210; statically and dynamically balanced, galvanized steel, centrifugal fan mounted on solid steel shaft with heavy-duty, self-aligning, prelubricated ball bearings and V-belt drive with matching motor sheaves and belts.
      1) Fan Type: Forward curved.
      2) Fan Type: Backward inclined.
   d. Controls: Provide factory-wire connection for power supply and field-wire unit to remote control panel.

SECTION 15575 – BREECHING AND STACKS

Scope:

1. Types of breeching and stacks include type B, double wall gas vents, positive pressure breeching and stack, fabricated metal breeching.

References:

1. The publications referenced above (or below) establish minimum requirements for materials, systems and execution which may be specified in this Section.

   AMERICAN NATIONAL STANDARDS INSTITUTE (ANSI)

   ANSI Z21.66 Automatic Vent Damper Devices for Use with Gas-Fired Appliances

   NATIONAL FIRE PROTECTION ASSOCIATION (NFPA)

   NFPA 211 Chimneys, Fireplaces, Vents, and Solid Fuel-Burning Appliances

Submittals:

1. Shop Drawings: Submit shop drawings for breeching, chimneys and stacks. Detail assemblies and indicate dimensions, clearances and size. Provide plans, elevations, selections, details.

2. Product Data: Submit manufacturer's specifications for pre-fabricated breechings and stacks, including materials, dimensions, weights, accessories, approvals, and installation instructions.

3. Operation and Maintenance Manuals.

Products:

1. Proprietary product names, manufacturers names, and model numbers are given to clarify the designer's intent and are not intended to limit selection of similar products from acceptable manufacturers.

2. Manufacturer:
   a. Ameri-Vent (AMPCO).
   b. Industrial Chimney.
   c. Metal-Fab.
   d. Schebler Co.

e. Selkirk Metalbestos.
f. Van-Packer Co.

3. Type B Double Wall Gas Vent:
   a. General: Provide double wall gas vent, UL-listed for Type B, consisting of double wall metal construction pipe sections and fittings and accessories required for complete installation. Construct inner pipe of aluminum and outer pipe of galvanized steel.

4. All Steel Positive Pressure Double Wall Stacks:
   a. General: Provide double wall positive pressure breechings and stacks with 2" thick high temperature fiber insulation between inner and outer walls. Inner wall shall be constructed of 304 stainless steel 0.035 inch thick. Outer wall shall be constructed of aluminized steel.

5. Other Special Stacks:

   a. Where the appliance calls for other specialized stack designs such as concentric stacks, or stacks for condensing applications, provide breeching and stacks in specific accord with the appliance manufacturer's instructions.

SECTION 15620 – PACKAGED AIR-COOLED ROTARY-SCREW CHILLERS

Scope: 1. Provide exterior air-cooled rotary-screw chiller for chilled water cooling systems.

References: 1. The publications referenced above (or below) establish minimum requirements for materials, systems and execution which may be specified in this Section.

AIR CONDITIONING AND REFRIGERATION INSTITUTE (ARI)

ARI 550/590	Water Chilling Packages Using the Vapor Compression Cycle

AMERICAN SOCIETY OF HEATING, REFRIGERATING AND AIR-CONDITIONING ENGINEERS (ASHRAE)

ASHRAE 15	Safety Code for Mechanical Refrigeration
ASHRAE 34	Number Designation and Safety Classification of Refrigerants
ASHRAE 90.1	Energy Efficient Design for New Buildings Except Low Rise Residential Buildings

ASME INTERNATIONAL (ASME)

ASME BPV VIII Div 1	Boiler and Pressure Vessel Code; Section VIII, Pressure Vessels Division 1 – Basic Coverage
ASME BPV IX	Boiler and Pressure Vessel Code; Section IX, Welding and Brazing Qualifications

AMERICAN WELDING SOCIETY (AWS)

AWS Z49.1	Safety in Welding and Cutting

NATIONAL ELECTRICAL MANUFACTURERS ASSOCIATION (NEMA)

NEMA MG 1	Motors and Generators

NEMA MG2 Safety Standard for Construction and Guide for Selection, Installation, and Use of Electric Motors and Generators

Submittals:

1. Product Data: Submit manufacturer=s technical product data for chiller showing dimensions, weights, capacities, ratings with operating point clearly indicated, motor electrical characteristics, gages and finishes of material, and installation instructions. Provide component removal and replacement clearance requirements.

2. Wiring Diagrams: Submit manufacturer=s electrical requirements for power supply wiring to chiller units. Submit manufacturer=s ladder-type wiring diagrams for interlock and control wiring. Submit manufacturer=s chiller computer panel literature and wiring diagrams. Clearly differentiate between portions of wiring that are factory-installed and portions to be field-installed.

3. Sound Data: Submit manufacturer=s sound power level data in 8 octave bands beginning with the 60 Hertz mean frequency band and including the 8000 Hertz band. Where split systems are used, include sound data for all components furnished.

4. Maintenance Data: Submit maintenance instructions, including instructions for lubrication, motor and drive replacement, and spare parts lists. Include this data, product data, shop drawings, and wiring diagrams in Maintenance Manuals.

Warranty:

1. Furnish manufacturer's standard, but not less than five (5) year warranty from date of substantial completion.

Training:

1. Provide training for maintenance and operations personnel.

Products:

1. Proprietary product names, manufacturers names, and model numbers are given to clarify the designer's intent and are not intended to limit selection of similar products from acceptable manufacturers.

2. Manufacturer:
   a. Carrier.
   b. McQuay Group; Snyder General.
   c. Trane.
   d. York Div.; Borg-Warner Corporation.

3. Chiller:
   a. Chiller shall be factory assembled, shall have single point electrical connection, and shall include all required piping and controls.
   b. Unit shall be ARI 590 rated and shall include a five (5) year warranty.
   c. Compressors shall be rotary-screw type with semi-hermetic construction.
   d. Chiller barrel shall be a direct expansion shell and tube with refrigerant in the tubes and liquid in the shell. Working pressure shall be 235 psig for the refrigerant side.
   e. Chiller barrel to be constructed to ASME code requirements.
   f. Chiller controls shall include integral or remote mounted microprocessor control panel with functional and alarm monitoring, and reset control capability. Panel shall include instrumentation allowing open communication to Owner's Building Automation System.
   g. Design/Build Contractor will install proper percentage of glycol anti-freeze as required for specific site outdoor design conditions; applicable system use; and in accordance with glycol manufacturer's recommendations for application freeze or burst protection.

Execution: 1. Installation shall be in accordance with manufacturer's recommendations and industry guidelines.

2. Provide concrete pad under entire chiller frame.

SECTION 15720 – AIR HANDLING UNITS

Scope: 1. Provide modular indoor air handling units of size and configuration required for project.

References: 1. The publications referenced above (or below) establish minimum requirements for materials, systems and execution which may be specified in this Section.

AIR CONDITIONING AND REFRIGERATION INSTITUTE (ARI)

ARI 410	Forced-Circulation Air-Cooling and Air-Heating Coils
ARI 430	Central-Station Air-Handling Units
ARI Guideline D	Application and Installation of Central Station Air-Handling Units

AIR MOVEMENT AND CONTROL ASSOCIATION (AMCA)

AMCA 210	Laboratory Methods of Testing Fans for Rating
AMCA 300	Reverberant Room Method for Sound Testing of Fans

AMERICAN SOCIETY OF HEATING, REFRIGERATING AND AIR-CONDITIONING ENGINEERS (ASHRAE)

ASHRAE 52.1	Gravimetric and Dust-Spot Procedures for Testing Air-Cleaning Devices Used in General Ventilation for Removing Particulate Matter

NATIONAL ELECTRICAL MANUFACTURERS ASSOCIATION (NEMA)

NEMA MG 1	Motors and Generators

NATIONAL FIRE PROTECTION ASSOCIATION (NFPA)

NFPA 90A	Installation of Air Conditioning and Ventilating Systems

UNDERWRITERS LABORATORIES (UL)

UL 900	Test Performance of Air Filter Units
UL Elec Const Dir	Electrical Construction Equipment Directory
UL Fire Resist Dir	Fire Resistance Directory (2 Vol.)

Submittals: 1. Product Data: Submit manufacturer's technical product data for air handling units showing dimensions, weights, capacities, ratings, fan performance with operating point clearly indicated, motor electrical characteristics, gages and finishes of materials, and installation instructions. Provide coil, fan, and other component removal and replacement clearance requirements.

2. Wiring Diagrams: Submit manufacturer's electrical requirements for power supply wiring to air handling units. Submit manufacturer's ladder-type wiring diagrams for interlock and control wiring. Clearly differentiate between portions of wiring that are factory-installed and portions to be field-installed.

3. Maintenance Data: Submit maintenance instructions, including instructions for lubrication, filter replacement, motor and drive replacement, and spare parts lists. Include this data, product data, shop drawings, and wiring diagrams in maintenance manuals.

Training: 1. Provide training for maintenance and operations personnel.

Products: 1. Proprietary product names, manufacturers names, and model numbers are given to clarify the designer's intent and are not intended to limit selection of similar products from acceptable manufacturers.

2. Manufacturer:
   a. Carrier Air Conditioning.
   b. McQuay Inc.; Air Conditioning Div.
   c. Pace.
   d. Haaken.
   e. York Div.; Borg-Warner Corp.

3. Casing: Provide double wall insulated casings for all sections exposed to the air stream. Interior of casing to be galvanized steel, 20 gauge nominal.

4. Sheaves and belts rated at 150% motor horsepower.

5. Fans: Air foil blade design (for units over 18,000 CFM), dynamically balanced before and after installation in cabinet. V-belt drive to be cast-iron or steel sheaves with adjustable pitch. Service factor to be 1.3 times fan brake horsepower.

6. Coils: Provide preheat, hot water, chilled water, or DX cooling coils as unit requires. Copper tubes with aluminum fins, ARI certified, UL listed.

7. Provide access sections with double wall doors.

8. Provide blender section for mixing of return and outside air streams.

9. Filter Section: Sealed filter section with 65% efficiency filters.

10. Provide Ruskin CD60 or equal ultra-low leak dampers.

11. Where applied to serve also as smoke dampers, provide dampers and operators specifically rated for smoke damper service.

SECTION 15730 – SPLIT SYSTEM AIR CONDITIONING UNITS

Scope: 1. Provide split system air conditioning units for dedicated cooling applications.

2. Air conditioning units shall be ceiling mounted.

References: 1. The publications referenced above (or below) establish minimum requirements for materials, systems and execution which may be specified in this Section.

AIR CONDITIONING AND REFRIGERATION INSTITUTE (ARI)

ARI 210/240	Unitary Air-Conditioning and Air-Source Heat Pump Equipment
ARI 410	Forced-Circulation Air-Cooling and Air-Heating Coils

ARI 460	Remote Mechanical-Draft Air-Cooled Refrigerant Condensers
ARI 700	Specifications for Fluorocarbon and Other Refrigerants

AMERICAN SOCIETY FOR TESTING AND MATERIALS (ASTM)

ASTM C 1071	Thermal and Acoustical Insulation (Glass Fiber, Duct Lining Material)

AMERICAN SOCIETY OF HEATING, REFRIGERATING AND AIR-CONDITIONING ENGINEERS (ASHRAE)

ASHRAE 15	Safety Code for Mechanical Refrigeration
ASHRAE 34	Number Designation and Safety Classification of Refrigerants
ASHRAE 90.1	Energy Efficient Design for New Buildings Except Low-Rise Residential Buildings

NATIONAL ELECTRICAL MANUFACTURERS ASSOCIATION (NEMA)

NEMA ICS 6	Industrial Control and Systems, Enclosures
NEMA MG 1	Motors and Generators
NEMA MG 2	Safety Standard for Construction and Guide for Selection, Installation, and Use of Electric Motors and Generators

NATIONAL FIRE PROTECTION ASSOCIATION (NFPA)

NFPA 70	National Electrical Code

UNDERWRITERS LABORATORIES (UL)

UL 1995	Heating and Cooling Equipment
UL 900	Test Performance of Air Filter Units

Submittals:

1. Product Data: Submit manufacturer's technical product data for air-conditioning units/condenser units showing dimensions, weights, capacities, ratings, fan performance with operating point clearly indicated, motor electrical characteristics, gages and finishes of materials, and installation instructions. Provide coil, fan, and other component removal and replacement clearance requirements.

2. Wiring Diagrams: Submit manufacturer's electrical requirements for power supply wiring to air-conditioning units/condenser units. Submit manufacturer's ladder-type wiring diagrams for interlock and control wiring. Clearly differentiate between portions of wiring that are factory-installed and portions to be field-installed.

3. Maintenance Data: Submit maintenance instructions, including instructions for lubrication, motor and drive replacement, and spare parts lists. Include this data, product data, shop drawings, and wiring diagrams in maintenance manuals.

Products:

1. Proprietary product names, manufacturers names, and model numbers are given to clarify the designer’s intent and are not intended to limit selection of similar products from acceptable manufacturers.

2. Manufacturer:
   a. Carrier Air Conditioning.
   b. Data-Aire.
   c. Liebert.

3. Provide ceiling mounted, self-contained air conditioning unit consisting of cabinet, fan, evaporator coil, and controls. Evaporator coil to be direct expansion type with required piping and expansion valves.

4. Condenser shall be remote grade mounted air cooled DX unit with hermetic compressor.

5. Filters for supply/return grilles to be 20% pleated.

6. System to include condensate pump with capacity of 30 gph at 20 ft. head.

7. Unit control system shall be factory mounted with remote programmable operation terminal.

SECTION 15740 – AIR-TO-AIR HEAT PUMPS

Scope: 1. Provide split system air-to-air heat pumps for project.

References: 1. The publications referenced above (or below) establish minimum requirements for materials, systems and execution which may be specified in this Section.

AIR CONDITIONING AND REFRIGERATION INSTITUTE (ARI)

ARI 210/240	Unitary Air-Conditioning and Air-Source Heat Pump Equipment
ARI 410	Forced-Circulation Air-Cooling and Air-Heating Coils
ARI 460	Remote Mechanical-Draft Air-Cooled Refrigerant Condensers
ARI 700	Specifications for Fluorocarbon and Other Refrigerants

AMERICAN SOCIETY FOR TESTING AND MATERIALS (ASTM)

ASTM C 1071	Thermal and Acoustical Insulation (Glass Fiber, Duct Lining Material)

AMERICAN SOCIETY OF HEATING, REFRIGERATING AND AIR-CONDITIONING ENGINEERS (ASHRAE)

ASHRAE 15	Safety Code for Mechanical Refrigeration
ASHRAE 34	Number Designation and Safety Classification of Refrigerants
ASHRAE 90.1	Energy Efficient Design for New Buildings Except Low-Rise Residential Buildings

NATIONAL ELECTRICAL MANUFACTURERS ASSOCIATION (NEMA)

NEMA ICS 6	Industrial Control and Systems, Enclosures
NEMA MG 1	Motors and Generators
NEMA MG 2	Safety Standard for Construction and Guide for Selection, Installation, and Use of Electric Motors and Generators

NATIONAL FIRE PROTECTION ASSOCIATION (NFPA)

NFPA 70	National Electrical Code

UNDERWRITERS LABORATORIES (UL)

UL 1995	Heating and Cooling Equipment
UL 900	Test Performance of Air Filter Units

Submittals: 1. Product Data: Submit manufacturer's technical product data for air-to-air heat pumps showing dimensions, weights, capacities, ratings, fan performance with operating point clearly indicated, motor electrical characteristics, gages and finishes of materials, and installation instructions. Provide coil, fan, and other component removal and replacement clearance requirements.

2. Wiring Diagrams: Submit manufacturer's electrical requirements for power supply wiring to air-to-air heat pumps. Submit manufacturer's ladder-type wiring diagrams for interlock and control wiring. Clearly differentiate between portions of wiring that are factory-installed and portions to be field-installed.

3. Maintenance Data: Submit maintenance instructions, including instructions for lubrication, motor and drive replacement, and spare parts lists. Include this data, product data, shop drawings, and wiring diagrams in maintenance manuals.

Products: 1. Proprietary product names, manufacturers names, and model numbers are given to clarify the designer's intent and are not intended to limit selection of similar products from acceptable manufacturers.

2. Manufacturer:
   a. Carrier Air Conditioning, Division of Carrier Corp.
   b. Lennox Industries.
   c. Rheem – Air Conditioning Division.

3. Heavy gauge galvanized steel cabinet with powdered enamel finish.

3. Extra large surface area for circuitry of coils to provide maximum efficiency.

4. Scroll type compressor.

5. Crank case heater, coils, belt driven fans, reversing valves, check/expansion valve, high capacity drier, high pressure switch, freezestat and low ambient controls.

6. Filter Section: Angle filter with 2" – 30% efficient filters.

7. Economizer control to be included.

SECTION 15750 – DEHUMIDIFIER UNITS

Scope: 1. Provide UL listed dehumidifier unit and drain piping for condensate.

References: 1. The publications referenced above (or below) establish minimum requirements for materials, systems and execution which may be specified in this Section.

UL Underwriters Laboratories

Submittal: 1. Shop drawings showing equipment size, capacity, connection requirements.

Products: 1. Proprietary product names, manufacturers names, and model numbers are given to clarify the designer's intent and are not intended to limit selection of similar products from acceptable manufacturers.

2. Manufacturer:
   a. EBAC.
   b. Edison.
   c. Oasis Corporation.

3. Sealed refrigeration unit with quiet running fan.

4. Automatic humidistat control, plus or minus 1% accuracy in range down to 20% RH.

5. Threaded drain line connection.

6. Automatic frost-free control to prevent frost buildup on coils.

7. One (1) year warranty on parts and labor.

SECTION 15760 – TERMINAL HEATING UNITS

Scope: 1. Provide terminal heating units as required for project.

References: 1. The publications referenced above (or below) establish minimum requirements for materials, systems and execution which may be specified in this Section.

AIR CONDITIONING AND REFRIGERATION INSTITUTE (ARI)

ARI 410	Forced-Circulation Air-Cooling and Air-Heating Coils
ARI 880	Air Terminals

AIR MOVEMENT AND CONTROL ASSOCIATION (AMCA)

AMCA 210	Laboratory Methods of Testing Fans for Rating

AMERICAN NATIONAL STANDARDS INSTITUTE (ANSI)

ANSI Z21.47	Gas-Fired Furnaces

NATIONAL ELECTRICAL MANUFACTURERS ASSOCIATION (NEMA)

NEMA MG 1 Motors and Generators

NATIONAL FIRE PROTECTION ASSOCIATION (NFPA)

NFPA 54	National Fuel Gas Code
NFPA 90A	Installation of Air Conditioning and Ventilating Systems
NFPA 90B	Installation of Warm Air Heating and Air Conditioning Systems
NFPA 211	Chimneys, Fireplaces, Vents, and Solid Fuel-Burning Appliances

UNDERWRITERS LABORATORIES (UL)

UL 441	Gas Vents
UL 723	Test for Surface Burning Characteristics of Building Materials
UL 900	Test Performance of Air Filter Units
UL 1738	Venting Systems for Gas-Burning Appliances, Categories II, III and IV
UL Bld Mat Dir	Building Materials Directory
UL Elec Const Dir	Electrical Construction Equipment Directory
UL Fire Resist Dir	Fire Resistance Directory (2 Vol.)

Submittals:

1. Product Data: Submit manufacturer's specifications for terminal heating units showing dimensions, capacities, ratings, performance characteristics, gages and finishes of materials, and installation instructions.

2. Operation and Maintenance Manuals.

Products:

1. Proprietary product names, manufacturers names, and model numbers are given to clarify the designer's intent and are not intended to limit selection of similar products from acceptable manufacturers.

2. Manufacturer – Air Coils, Cabinet Unit Heaters, and Unit Heaters:
   a. Airtherm Mfg. Co.
   b. Carrier A/C Group, Carrier Corp.
   c. Dunham-Bush, Inc.
   d. McQuay International.

3. Manufacturer – Infrared Heaters:
   a. Perfection-Schwank, Inc.
   b. Roberts-Gordon, Inc.
   c. Solaronics, Inc.

4. Air Coils: Provide duct mounted coils of capacities, pressure drops in accordance with ARI 410. Copper tubing aluminum fins, mechanically bonded. Proof test coils at 300 psi, leak test at 200 psi under water.

5. Cabinet Unit Heaters: Cabinet to be 16 gauge removable front panel, 18 gauge top and sides. Insulate front panel over coil section with access door on coil connection side, and at unit controller. Inlets and outlets to be ducted or through front panel. Factory color or custom colors available. Motors to have thermal overload protection. Fans forward curved fan wheels. Coils to be seamless copper tubes mechanically bonded to aluminum fins.

6. Infrared Heaters: Heavy-duty cast iron burners and cast iron combustion chambers with prewired controls. Radiant pipe and fittings to be 4" black steel pipe ASA Schedule 40, ASTM A 120. Reflectors shall be a highly infrared reflective material. Provide hanging materials and programmable thermostat.

7. Unit Heaters: Provide vertical/horizontal units constructed of steel with baked enamel finish. Aluminum fan factory balanced with built-in overload protection. Coils to be plate type aluminum mechanically bonded to copper tubes.

SECTION 15770 – RADIANT FLOOR HEATING SYSTEM

Scope:

1. Provide radiant floor heating system, including tubing, manifolds, and all accessories necessary for a complete system.

Submittals:

1. Submit shop drawings, descriptions of materials, and details of installation.

2. Components of the buried tubing system shall be provided by one manufacturer, including; tube, fittings, manifolds, and other ancillary items required for a complete installation.

3. Operation and Maintenance Manuals.

Warranty:

1. Tubing System Warranty Period: Twenty-five (25) years from date of substantial completion.

2. Manifold and Ancillary Components: Eighteen (18) months from date of substantial completion.

2. Products: 1. Proprietary product names, manufacturers names, and model numbers are given to clarify the designer's intent and are not intended to limit selections of similar products from acceptable manufacturers.Manufacturer:
   a. Wirsbo.

3. Tubing Systems:
   a. Tubes shall be crossed-linked polyethylene, rated at 180ºF maximum working temperature and 100 psi working pressure, manufactured in accordance with ASTM Standard Specification F876.

4. Manifolds:
   a. Manifolds shall be cast brass construction, and shall have integral circuit balancing valves. Manifolds shall be capable to vent air from the system. Manifolds shall have support brackets, and shall be isolated from supply and return tubing with isolation and balancing valves.

5. Fittings:
   a. Fittings shall be dezinctified resistant brass. The fittings shall consist of a barbed insert, compression ring, and compression nut.

6. Supply and Return Piping to Manifolds:
   a. Piping shall be metal pipe or crossed-linked polyethylene tube with an integral oxygen diffusion barrier. Crossed-linked polyethylene tube should only be used when specifically approved by the local building inspector.

7. Mixing Valves:
   a. Provide 3-way motorized mixing valves as recommended by the manufacturer to provide individual water supply temperatures as required in each zone.

SECTION 15810 – METAL DUCTWORK

Scope: 1. Provide rectangular and round metal ductwork for air distribution systems.

References: 1. The publications referenced above (or below) establish minimum requirements for materials, systems and execution which may be specified in this Section.

NATIONAL FIRE PROTECTION ASSOCIATION (NFPA)

NFPA 90A	Installation of Air Conditioning and Ventilation Systems
NFPA 96	Ventilation Control and Fire Protection of Commercial Cooking Equipment

SHEET METAL & AIR CONDITIONING CONTRACTORS' NATIONAL ASSOCIATION (SMACNA)

SMACNA	HVAC Duct Construction Standards

UNDERWRITERS LABORATORIES (UL)

UL 181	Factory Make Air Ducts and Air Connectors

Submittals: 1. Shop Drawings: Submit scaled layout drawings of metal ductwork and fittings including, but not limited to, duct sizes, locations, elevations, and slopes of horizontal runs, wall and floor penetrations, and connections. Show interface and spatial relationship between ductwork and proximate equipment. Show modifications of

indicated requirements, made to conform to local shop practice, and how those modifications ensure that free area, materials, and rigidity are not reduced.

2. Record Drawings: At project closeout, submit record drawings of installed metal ductwork and ductwork products

Products: 1. Sheet Metal: Galvanized sheet steel complying with ASTM A 653/A 924 with G90 zinc coating.

2. Black-Steel Sheets: Cold-rolled sheets per ASTM A 366/ A 366M.

3. Stainless Steel: Stainless steel complying with ASTM A 167, Type 302.

4. Aluminum Sheets: Sheets complying with ASTM B 209, Alloy 3003, Temper H14.

5. Flexible spiral-wound spring steel, 1" thick insulation complying with UL 181.

6. Miscellaneous Materials: Provide all required fittings, connectors, sealants, and supports conforming with highest industry standards.

Execution: 1. Installation of all ductwork, fittings, supports, and miscellaneous components shall conform to SMACNA "HVAC Duct Construction Standards."

SECTION 15820 – DUCTWORK ACCESSORIES

Scope: 1. Provide ductwork accessories to serve ductwork systems of air distribution.

References: 1. The publications referenced above (or below) establish minimum requirements for materials, systems and execution which may be specified in this Section.

AIR CONDITIONING AND REFRIGERATION INSTITUTE (ARI)

ARI 880 Air Terminals

NATIONAL FIRE PROTECTION ASSOCIATION (NFPA)

NFPA 90A Installation of Air Conditioning and Ventilation Systems

SHEET METAL & AIR CONDITIONING CONTRACTORS' NATIONAL ASSOCIATION (SMACNA)

SMACNA HVAC Duct Construction Standards

UNDERWRITERS LABORATORIES (UL)

UL 555 Fire Dampers
UL 555S Combination Fire/Smoke Dampers

Submittals: 1. Product Data: Submit manufacturer's specifications for each type of duct accessory, including dimensions, capacities, and materials of construction; and installation instructions.

Products: 1. Proprietary product names, manufacturers names, and model numbers are given to clarify the designer's intent and are not intended to limit selection of similar products from acceptable manufacturers.

2. Manufacturer – Fire and Smoke Dampers:
   a. Cesco.
   b. Greenheck.
   c. Ruskin.

3. Manufacturer – Sound Attenuators:
   a. Aersonics.
   b. Commercial Acoustics.
   c. Industrial Acoustics Corporation.
   d. Rink.
   e. United McGill Corporation.

4. Fire and Fire/Smoke Dampers: Galvanized steel, 16 gauge dampers shall comply with UL Standard 555 and 555S. Fire/smoke dampers to be electric operated.

5. Duct Hardware: All test holes and quadrant locks by one manufacturer.

6. Duct Access Doors: Provide access door at each item installed in ductwork, including smoke dampers, fire/smoke dampers, hydronic coils, VAV terminals, etc.

7. Flexible Connections: Provide flexible connection where ductwork connects to vibration isolated equipment.

8. Sound Attenuator: 22 gauge galvanized steel in accordance with ASHRAE recommendations. Inorganic filler material, inert, vermin and moisture proof. Combustion rating tested in accordance with ASTM E 84 and NFPA Standard 255.

Execution: 1. Installation of fire and fire/smoke dampers shall be in accordance with manufacturer's recommendations and NFPA 90A.

SECTION 15830 – FANS

Scope: 1. Provide fans of type and size required for project.

References: 1. The publications referenced above (or below) establish minimum requirements for materials, systems and execution which may be specified in this Section.

AIR MOVEMENT AND CONTROL ASSOCIATION (AMCA)

AMCA 210 Laboratory Methods of Testing Fans for Rating

AIR CONDITIONING AND REFRIGERATION INSTITUTE (ARI)

ARI 430 Central Station Air Handling Units

NATIONAL FIRE PROTECTION ASSOCIATION (NFPA)

NFPA 70 National Electrical Code

SHEET METAL & AIR CONDITIONING CONTRACTORS' NATIONAL ASSOCIATION (SMACNA)

SMACNA HVAC Duct Construction Standards

UNDERWRITERS LABORATORIES (UL)

UL 705 Power Ventilators

Submittals: 1. Product Data: Submit manufacturer's technical product data for fan, including specifications, capacity ratings, fan performance curves with operating point clearly indicated, gauges and finishes of materials, dimensions, weights, accessories furnished, and installation instructions.

2. Maintenance Data: Submit maintenance instructions, including lubrication instructions, motor and drive replacement, and spare parts lists. Include this data, product data, shop drawings, and wiring diagrams in maintenance manuals.

Products: 1. Proprietary product names, manufacturers names, and model numbers are given to clarify the designer's intent and are not intended to limit selection of similar products from acceptable manufacturers.

2. Manufacturer:
   a. Barry Blower; A Marley Co.
   b. Cook.
   c. Greenheck.

3. Axial Fans: Provide vaneaxial fans with fixed or adjustable pitch blades. Cast aluminum hub and blades to be 356-T6 aluminum, anodized finish. Motors to be high efficiency, cast iron with minimum 56,000 hours B-10 life.

4. Centrifugal Power Ventilators: Provide pre-fabricated, belt-driven or direct-driven centrifugal power ventilator. Aluminum weatherproof hoods. Gravity backdraft damper, bird screen, and disconnect switch. Prefabricated roof curb by same manufacturer.

5. Propeller Fans: Provide belt-driven or direct-driven propeller fans consisting of fan blades, hub, housing, motor, drive assembly, and accessories.

SECTION 15835 – OVERHEAD VEHICLE TAILPIPE EXHAUST SYSTEM (S)

Scope: 1. Provide complete and operational overhead vehicle exhaust system. Exhaust systems shall provide adequate air quantities and velocities.

References: 1. The publications referenced above (or below) establish minimum requirements for materials, systems and execution which may be specified in this Section.

AIR MOVEMENT AND CONTROL ASSOCIATION (AMCA)

AMCA 210 Laboratory Methods of Testing Fans for Rating

NATIONAL FIRE PROTECTION ASSOCIATION (NFPA)

NFPA 70 National Electrical Code
NFPA 90A Installation of Air Conditioning and Ventilation Systems

SHEET METAL & AIR CONDITIONING CONTRACTORS' NATIONAL ASSOCIATION (SMACNA)

SMACNA HVAC Duct Construction Standards

Submittals: 1. Product Data: Submit manufacturer's technical product data for exhaust systems, including specifications, capacity ratings, fan performance curves with operating point clearly indicated, gauges and finishes of materials, dimensions, weights, accessories furnished, and installation instructions.

2. Maintenance Data: Submit maintenance instructions, including lubrication instructions, motor and drive replacement, and spare parts lists. Include this data, product data, shop drawings, and wiring diagrams in maintenance manuals.

Products: 1. Proprietary product names, manufacturers names, and model numbers are given to clarify the designer's intent and are not intended to limit selection of similar products from acceptable manufacturers.

2. Manufacturer:
   a. Graco.

3. Ductwork:
   a. Ductwork shall be constructed of minimum gauge thickness as required in SMACNA Duct Construction Standards. Ductwork shall be round with lock seams.
   b. Fittings shall be constructed as required by SMACNA Duct Construction Standards.
   c. Cleanout shall be provided on the end of the main ductwork opposite the end of the fan suction connection.
   d. Flexible connectors shall be used at fan suction and discharge connection.
   e. Duct sleeves shall be provided for all ductwork 15 inch diameter and smaller, passing through floors, walls, ceilings or roofs.

4. Exhaust Hose System:
   a. Tailpipe adaptors shall be tapered cone type, with spring clips.
   b. Flexible exhaust hose shall be approved heat resistant wire reinforced glass fiber and silicone tubing.
   c. Exhaust hose suspension system shall suspend the flexible tubing overhead, when not in use. The suspension system shall be counter weighted, motorized type.

5. Dampers shall be circular disk type with quadrant locking device or blast gate type. Damper shall be made of stainless steel, blast gate dampers shall be two-piece construction.

6. Fans:
   a. Fans shall be ducted type, V-belt drives, designed for 150 percent of capacity. Fans shall have guards, vibration isolation support, non-overloading characteristics. Fan impellors shall be spark resistant construction, and coated with neoprene, epoxy, or phenolic resin to resist corrosion.
   b. Sound power levels shall be obtained according to AMCA 300.

SECTION 15840 – AIR TERMINAL UNITS

Scope: 1. Provide variable air volume air terminal units for supply air heating, cooling, and control.

References: 1. The publications referenced above (or below) establish minimum requirements for materials, systems and execution which may be specified in this Section.

AIR CONDITIONING AND REFRIGERATION INSTITUTE (ARI)

ARI 410 Forced Circulation Air Cooling and Air Heating Coils
ARI 880 Terminal Units

NATIONAL FIRE PROTECTION ASSOCIATION (NFPA)

NFPA 90A Installation of Air Conditioning and Ventilation Systems

UNDERWRITERS LABORATORIES (UL)

UL 181 Factory-Made Air Ducts and Connectors

Submittals:

1. Product Data: For each type of product indicated submit manufacturer's technical product data, including rated capacities of selected model clearly indicated, furnished specialties, sound-power ratings, and accessories.

2. Operation and Maintenance Manuals.

Products:

1. Proprietary product names, manufacturers names, and model numbers are given to clarify the designer's intent and are not intended to limit selection of similar products from acceptable manufacturers.

2. Manufacturer:
   a. Anemostat.
   b. Krueger.
   c. Metalaire.
   d. Titus.

3. Provide self-contained variable volume terminal units sized to deliver required air flow across a 0.3" to 3.0" pressure loss. Case to be 20 gauge galvanized steel internally lined fiberglass complying with UL 181 and NFPA 90A.

4. Damper actuator shall be factory mounted 24 volt electric motor driven, spring return.

5. Reheat coils shall be copper tubing with aluminum fins.

6. Maximum radiated and discharge NC (noise criteria) of 30 through whole CFM range per ARI Standard 885-90.

SECTION 15850 – AIR OUTLETS AND INLETS

Scope:

1. Provide diffuser, registers, grilles and gravity intake/relief ventilators to meet project requirements.

References:

1. The publications referenced above (or below) establish minimum requirements for materials, systems and execution which may be specified in this Section.

AIR CONDITIONING AND REFRIGERATION INSTITUTE (ARI)

ARI 880 Air Terminals

NATIONAL FIRE PROTECTION ASSOCIATION (NFPA)

NFPA 90A Installation of Air Conditioning and Ventilation Systems

UNDERWRITERS LABORATORIES (UL)

UL 181 Factory-Made Air Ducts and Air Connectors

Submittals:
1. Product Data: Submit manufacturer's data on diffusers, registers, and grilles including the following:
   a. Data Sheet: For each type of air outlet and inlet, and accessory furnished; indicate construction, finish, and mounting details.
   b. Performance Data: Include throw and drop, static-pressure drop, and noise ratings for each type of air outlet and inlet.
   c. Schedule of diffusers, registers, and grilles indicating drawing designation, room location, quantity, model number, size, and accessories furnished.
   d. Assembly Drawing: For each type of air outlet and inlet; indicate materials and methods of assembly of components.
2. Provide data for accessories as scheduled and/or specified.

Products:
1. Diffusers, Registers and Grilles: Provide supply, return, and exhaust diffusers, registers and grilles for configurations to fit project. Select materials, finish, and CFM flow rate within manufacturer's recommendations and industry design standards.

2. Intake and Relief Ventilators: Provide pre-fabricated intake or relief gravity ventilator, hooded type with extended throat, curb mounted to meet project requirements. Aluminum construction with bird screen covering intake/relief area. Provide damper in throat of roof curb.

SECTION 15855 – RANGE HOOD

Scope:
1. Provide range hood.

References:
1. The publications referenced above (or below) establish minimum requirements for materials, systems and execution which may be specified in this Section.

   NATIONAL FIRE PROTECTION ASSOCIATION (NFPA)

   NATIONAL SANITATION FOUNDATION (NSF)

   UNDERWRITERS LABORATORIES (UL)

Submittals:
1. Product Data: Submit manufacturer's technical product data showing dimensions, capacities, ratings, gages and finishes of material, and installation instructions.

2. Maintenance Data: Submit maintenance instructions for filter replacement. Include this data, product data, shop drawings, and wiring diagrams in Maintenance Manual.

Products:
1. Proprietary product names, manufacturers names, and model numbers are given to clarify the designer's intent and are not intended to limit selection of similar products from acceptable manufacturers.

2. Manufacturer:
   a. Captive Aire System.
   b. Gaylord Industries.
   c. Greenheck.

3. Hood shall be constructed of polished stainless steel.

4. Provide stainless steel self-draining extractor inserts with grease extraction efficiency of 90%.

5. Provide spring loaded, fusible link (280ºF) type fire damper in hood outlet.

6. Hood shall be U.L. listed and be in accordance with NSF and NFPA Standard 96.

7. Provide wet chemical fire extinguisher system. System shall have duct nozzle, plenum nozzles and down nozzles, micro switch and normally open contacts for connection to the shunt trip breaker, fusible link, and dry chemical. Wet chemical system shall comply with requirements of Section 13965 Wet Chemical Extinguishment System.

SECTION 15860 – AIR CLEANING DEVICES

Scope: 1. Provide air filter equipment as scheduled for Project air handling units.

References: 1. The publications referenced above (or below) establish minimum requirements for materials, systems and execution which may be specified in this Section.

UNDERWRITERS LABORATORIES (UL)

UL 586	High Efficiency, Particulate, Air Filter Units
UL 900	Test Performance of Air Filter Units

Submittals: 1. Product Data: Submit manufacturer's specifications for air filters showing dimensions, capacities, ratings, performance characteristics, and materials.

Products: 1. Air filters shall be 65% efficiency cartridge type. Each filter shall consist of non-woven cotton fabric media, media support grid and enclosing frame. The filter shall be listed by UL as Class II. Provide manometer-type filter gauge at each filter bank.

SECTION 15900 – HVAC INSTRUMENTATION AND CONTROLS

Scope: 1. Furnish and install a complete Electronic DDC system of temperature controls for all HVAC systems and equipment.

2. System designed for fail safe operation of HVAC equipment.

References: 1. The publications referenced above (or below) establish minimum requirements for materials, systems and execution which may be specified in this Section.

AIR MOVEMENT AND CONTROL ASSOCIATION (AMCA)

AMCA 500	Test Methods for Louvers, Dampers and Shutters

AMERICAN NATIONAL STANDARDS INSTITUTE (ANSI)

ANSI C12.1	Code for Electricity Metering

ASME INTERNATIONAL (ASME)

ASME B40.1	Gauges – Pressure Indicating Dial Type – Elastic Element

ELECTRONIC INDUSTRIES ALLIANCE (EIA)

EIA ANSI/EIA/TIA 232-F Interface Between Data Technical Equipment and Data Circuit-Terminating Equipment Employing Serial Binary Data Interchange

INSTITUTE OF ELECTRICAL AND ELECTRONICS ENGINEERS (IEEE)

IEEE C62.41 Surge Voltages in Low-Voltage AC Power Circuits
IEEE Std. 142 IEEE Recommended Practice for Grounding of Industrial and Commercial Power Systems

NATIONAL ELECTRICAL MANUFACTURERS ASSOCIATION (NEMA)

NEMA 250 Enclosures for Electrical Equipment (1000 Volts Maximum)
NEMA ICS 1 Industrial Control and Systems
NEMA ST 1 Specialty Transformers (Except General-Purpose Type)

NATIONAL FIRE PROTECTION ASSOCIATION (NFPA)

NFPA 70 National Electrical Code
NFPA 90A Installation of Air Conditioning and Ventilating Systems

UNDERWRITERS LABORATORIES (UL)

UL 508 Industrial Control Equipment
UL 555S Leakage Rated Dampers for Use in Smoke Control Systems

Submittals:

1. Shop Drawings: Submit shop drawings for each control system, containing the following information:
   a. Ten (10) copies of shop drawings of the entire control system shall be submitted and shall consist of a complete list of equipment and materials, including manufacturers catalog data sheets and installation instructions. Shop drawings shall also contain complete wiring and schematic diagrams, software descriptions, calculations, and any other details required to demonstrate that the system has been coordinated and will properly function as a system. Terminal identification for all control wiring shall be shown on the shop drawings. A complete written Sequence of Operation, as well as a hard copy graphical depiction of the application control programs, shall also be included with the submittal package.
   b. Schematic flow diagram of system showing all appropriate HVAC system components. Include flow characteristics (C_v values) and shutoff pressure ratings for the hydronic system valves.
   c. Label each control device with setting address or adjustable range of control.
   d. Wiring Diagrams for each electrical control device.
   e. Provide complete system power, interlock and control wiring diagrams.
   f. Indicate all required electrical wiring. Clearly differentiate between portions of wiring that are factory installed and portions to be field installed.
   g. Provide details of control panel, monitor readouts, including control points, instruments, and labeling.
   h. Upon completion of the work, provide a complete set of drawings and application software on magnetic floppy disk media. Drawings shall be provided as Micro Station compatible data log files.

2. Product Data: Submit manufacturer's specifications and engineering data sheet for each control device furnished, including installation instructions and start-up instructions.

3. Maintenance Data: Submit maintenance data and spare parts lists for each type of control device and for the total BTCS.

4. Manufacturer's Data: Brochures containing control drawings and wiring diagrams, cuts of all control equipment and all control descriptions and sequences. Include leakage and flow characteristics charts for automatic dampers. Provide installation instructions and start-up instructions.

5. "As-Built" shop drawings, descriptive literature and parts lists for use by Owner's operating personnel.

6. Factory Quality Certification: The manufacturer of the Temperature Control System shall provide documentation supporting compliance with ISO-9001 (Model for Quality Assurance in Design/Development, Production, Installation and Servicing). The intent of this specification requirement is to assure that the products from the Temperature Control System Manufacturer are delivered through a Quality System and Framework that will assure consistent quality in the products delivered for this project. Product literature provided by the Temperature Control System Manufacturer shall contain the ISO-9001 Certification Mark from the applicable registrar.

7. Operation and Maintenance Manuals.

Training: 1. Provide training for maintenance and operations personnel.

   a. Products: Manufacturer for all control system components and software shall be NOVAR HVAC Temperature Control System.

2. Electronic DDC Control System for HVAC systems.
   a. DDC control including local DDC controllers for air handling units, hydronic pumping systems, and VAV terminal units in training facilities and office buildings. Provide central DDC computer control station for each building.
   b. Electronic controls for HVAC systems in OMS buildings.

3. Electrical control wiring in metal conduit.

4. Electric motor actuated dampers shall include minimum 16 gage galvanized steel frames and blades. Include blade edge and tip seals.
   a. Leakage allowed: 6 cfm per square foot at 4 inches w.g.
   b. Parallel blade for two-position control, opposed blade for proportional control.
   c. Electronic actuators to be electronic direct controlled type and shall include electronic overload sensing circuitry.

5. Electric actuated control valves shall be positive positioning with polished stainless steel stem spring return.
   a. Valves to be rated for 125 psi and 240°F.
   b. Valves sized for minimum 7.5 foot water gage pressure drop.

6. Room sensor/thermostats shall be 1000 platinum resistance temperature detector, or sealed thermistor type.
   a. Locking covers.

7. Duct thermostats shall be minimum 8 foot sensing element type, adjustable to 5°F of discharge temperature.
   a. Low temperature thermostats shall be 2-pole with two sets of C contacts.

8. Relative humidity sensors shall have bulk polymer resistance sensing elements.
   a. 0 to 100% relative humidity range.
   b. Temperature range 25°F to 130°F.
   c. Accuracy with 3%.
   d. 4-20 mA output transmitter.

9. Thermowells shall be constructed of Series 300 stainless steel with threaded brass plug.

10. Pipe temperature sensors shall be 10,000 OHM platinum, RTD type, and accuracy to 0.5°F.

11. Carbon monoxide sensor/monitors shall be microprocessor based with 0-500 ppm range. Sensors to be UL and CSA certified.

12. DDC system to be BACnet or LONworks compatible.
    a. Computer to be a state-of-the-art PC with minimum 512 megabyte RAM, 80 gigabyte hard drive, 2.0 gigahertz, Pentium 4, with video card, modem, CD drive and 19 inch monitor.
    b. Software shall be provided to provide set point control and monitoring of HVAC functions.
    c. Local DDC controllers shall be stand alone capable with 32 bit processor. 24 volt, 3 amp maximum digital output; thermistor 10,000 OHM, universal input; 4-20 mA analog electronic output.
    d. Application software to include time scheduling, optimum start/stop, source temperature optimization and space temperature control.

13. Provide laptop workstation with connecting ports at all thermostats, AHU controller, chiller controller or network controllers.

Execution:

1. Control of VAV air handling units through local DDC controller and building central computer.
    a. Remote static pressure control of supply and return fan VFD.
    b. 2-way modulating control of hot water and chilled water coils through discharge thermostat.
    c. Economizer control.
    d. Unoccupied control to include fan cycling to satisfy space thermostat.

2. VAV terminal unit DDC control interlocked with reheat coil 2-way control valve.

3. Primary/secondary pump controls for hot water heating system. Pressure sensor control of secondary pump VFD. 2-way control valve at duct reheat coils. Differential pressure device at one remote coil.

4. Primary/secondary pump controls for chilled water system. VFD control of secondary pump through pressure sensor at one chilled water coil.

5. Kitchen make-up exhaust fans interlocked with kitchen make-up unit.

6. Garage make-up unit and exhaust fan control through manual switch, carbon monoxide sensors, and VOC monitors.

7. Boiler control through boiler manufacturer control panel. Combustion air intake damper interlock with boiler control panel.

8. DDC analog and digital points shall be included for all HVAC system and equipment parameters for Training Facilities and Office Buildings.

9. All instrumentation and control devices on the control panels, in the control panels, and in the system shall be permanently labeled with engraved or stamped tags. The tags shall be mechanically fastened with screws, chains, or wires. All tags shall match the device numbers shown on the approved control schematics.

10. Provide a block diagram showing the network and connected control devices and workstation. Identify the network type.

11. Damper actuators shall have 150% of the torque recommended by the damper manufacturer.

12. Provide On-Off-Auto switches for each digital output which controls a device. These switches shall be mounted in the field control panel.

13. Provide Minimum-Maximum-Auto switches, or Auto-Manual switches with adjustable manual output override, for each analog output. The status of these shall be available to the panel for further processing.

14. Provide access to the VAV terminal unit via a portable workstation/tester port at the associated thermostat.

15. Provide access to the entire control system via a portable workstation/tester port at all AHU, chiller, or network controllers.

16. Motor control safety devices such as smoke detectors, freezestats, overpressure switches shall be wired to the DDC controller for shutdown and alarm and hard wired to the motor controller for shutdown.

SECTION 15950 – TESTING, ADJUSTING AND BALANCING

Scope: 1. Provide testing and balancing services for all air distribution systems, hydronic distribution systems and associated equipment. The work shall include setting of speed and volume flow for systems, recording data, conducting tests, and submitting reports.

References: 1. The publications referenced above (or below) establish minimum requirements for materials, systems and execution which may be specified in this Section.

ASSOCIATED AIR BALANCE COUNCIL (AABC)

AABC Compliance: Comply with AABC's Manual MN-1 "AABC National Standards", as applicable to mechanical air and hydronic distribution systems, and associated equipment and apparatus.

NATIONAL ENVIRONMENTAL BALANCING BUREAU (NEBB)

NEBB Compliance: Comply with NEBB's "Procedural Standards for Testing, Adjusting, and Balancing of Environmental Systems" as applicable to mechanical air and hydronic distribution systems, and associated equipment and apparatus.

Products: 1. Testers Qualifications: Firm certified by National Environmental Balancing Bureau (NEBB) or Associated Air Balance Council (AABC) in those testing and balancing disciplines similar to those required for this Project, who is not Installer of system to be tested and is otherwise independent of Project.

2. Industry Standards: Comply with ASHRAE recommendations pertaining to measurements, instruments, and testing, adjusting, and balancing, except as otherwise indicated.

DIVISION 16 - ELECTRICAL

SECTION 16050 – BASIC ELECTRICAL MATERIALS AND METHODS

Scope:

1. The Contractor shall become familiar with all details of work and verify all dimensions in the field so that all outlets and equipment are properly located and readily accessible.

2. Materials and Equipment shall be installed in accordance with NFPA 70, recommendations of the manufacturer, and as indicated.

3. Lighting fixtures, outlets, and other equipment and materials shall be coordinated with mechanical or structural features prior to installation.

4. If any conflicts occur necessitating departures from the drawings, details of, and reasons for, departures shall be submitted and approved prior to implementing any change.

5. Construct concrete bases 4 inches larger, in both directions, than the unit/equipment to be supported. Follow supported equipment manufacturer's anchorage recommendations and setting templates for anchor-bolt and tie locations. Use 3000 psi 28-day compressive-strength concrete and reinforcement.

References:

1. The publications referenced above (or below) establish minimum requirements for materials, systems and execution which may be specified in this Section.

NATIONAL FIRE PROTECTION ASSOCIATION (NFPA)

NFPA 70	National Electrical Code

SECTION 16060 – GROUNDING AND BONDING

Scope:

1. Provide grounding that is in conformance with NFPA 70.

2. Provide ground resistance testing by fall of potential method per IEEE Standard 81.

References:

1. The publications referenced above (or below) establish minimum requirements for materials, systems and execution which may be specified in this Section.

AMERICAN SOCIETY FOR TESTING AND MATERIALS (ASTM)

ASTM B 1	Hard-Drawn Copper Wire
ASTM B 8	Concentric-Lay-Stranded Copper Conductors, Hard, Medium-Hard, or Soft

INSTITUTE OF ELECTRICAL AND ELECTRONICS ENGINEERS (IEEE)

IEEE Std 81	Guide for Measuring Earth Resistivity, Ground Impedance, and Earth Surface Potentials of a Ground System

NATIONAL FIRE PROTECTION ASSOCIATION (NFPA)

NFPA 70	National Electrical Code

UNDERWRITERS LABORATORIES (UL)

UL 467	Grounding and Bonding Equipment
UL 83	Thermoplastic-Insulated Wires and Cables

Submittals: 1. Test Reports.

Products: 1. Ground Rods: Shall be sectional type copper clad steel conforming to UL 467, 5/8" diameter, 120" long.

2. Ground Bus: Shall be bare conductor or flat copper in one piece, size and quantities based on application.

3. Grounding Conductors: Provide a green equipment grounding conductor, sized in accordance with NFPA 70, regardless of the type of conduit. Grounding wire may be type TW conforming to UL 83.

4. Bonding Conductors:
   a. Solid bare copper wire for sizes No. 8 AWG and smaller diameter shall conform to ASTM B1.
   b. Class B, stranded bare copper wire for sizes No. 6 AWG and larger diameter shall conform to ASTM B8.

Execution: 1. Connections and splices shall be of the brazed, welded, bolted, or pressure-connector type, except that pressure connectors or bolted connections shall be used for connections to removable equipment. Connections to grounding electrodes shall be by exothermic weld or irreversible connector.

SECTION 16070 – HANGERS AND SUPPORTS

Scope: 1. Provide hangers and supports of electrical equipment/components suitable for the project.

2. Provide seismic protection for electrical equipment and systems.

3. Size supports for multiple raceway installations so capacity can be increased by a 25 percent minimum in the future.

4. Provide metal channel racks for mounting cabinets, panelboards, disconnect switches, control enclosures, pull and junction boxes, transformers, and other devices unless components are mounted directly to structural elements of adequate strength.

References: 1. The publications referenced above (or below) establish minimum requirements for materials, systems and execution which may be specified in this Section.

SMACNA Seismic Restraint Manual

Submittals: 1. Shop Drawings.
2. Product Data.

Products: 1. Damp Locations and Outdoors: Provide hot-dip galvanized materials or nonmetallic, U-channel system components.

2. Dry Locations: Provide steel materials.

3. Support Clamps for PVC Raceways: Provide click-type clamp system.

4. Selection of Supports: Comply with manufacturer's written instructions.

5. Strength of Supports: Provide supports adequate to carry present and future loads, times a safety factor of at least four; minimum of 200 lb. (90 kg.) design load.

SECTION 16075 – ELECTRICAL IDENTIFICATION

Scope:

1. Provide nameplates on major items of electrical equipment and major components, i.e, panelboards, starters, safety switches, mo tor control centers, transformers, equipment enclosures, switchgear, switchboards, motors, control power transformers, control devices, instrument transformers. Nameplate legend shall match equipment designations on construction documents and shall include the required minimum Ampere Interrupting Rating for the equipment.

2. Designation of motors shall coincide with their designation in the motor control center or panel.

References:

1. The publications referenced above (or below) establish minimum requirements for materials, systems and execution which may be specified in this Section.

AMERICAN SOCIETY FOR TESTING AND MATERIALS (ASTM)

ASTM D 709 Laminated Thermosetting Materials

Products:

1. Identification nameplates shall be made of laminated plastic in accordance with ASTM D 709 with black outer layers and a white core. Edges shall be chamfered. Fasten nameplates with black-finished round-head drive screws.

SECTION 16120 – WIRES AND CABLES

Scope:

1. Provide wiring and cables and associated splices, connectors, and terminations for wiring systems rated 600 volts and less.
   a. Conductors No. 8 AWG and larger diameter shall be stranded. Conductors No. 10 AWG and smaller shall be solid, except that conductors for remote control, alarm, and signal circuits, Classes 1, 2, and 3 shall be stranded.
   b. All conductors shall be copper.

2. Provide continuity and insulation resistance tests.

References:

1. The publications referenced above (or below) establish minimum requirements for materials, systems and execution which may be specified in this Section.

AMERICAN SOCIETY FOR TESTING AND MATERIALS (ASTM)

ASTM B 1 Hard-Drawn Copper Wire
ASTM B 8 Concentric-Lay-Stranded Copper Conductors, Hard, Medium-Hard, or Soft

InterNATIONAL ELECTRICAL TESTING ASSOCIATION

NETA ATS Acceptance Testing Specifications for Electrical Power Distribution Equipment and Systems

NATIONAL FIRE PROTECTION ASSOCIATION (NFPA)

NFPA 70 National Electrical Code

NATIONAL ELECTRICAL MANUFACTURERS ASSOCIATION (NEMA)

NEMA WC 5	Thermoplastic-Insulated Wire and Cable for the Transmission and Distribution of Electrical Energy
NEMA WC 7	Cross-Linked-Thermosetting-Polyethylene-Insulated Wire and Cable for the Transmission and Distribution of Electrical Energy

UNDERWRITERS LABORATORIES (UL)

UL 4	Armored Cable
UL 44	Thermoset-Insulated Wires and Cables
UL 83	Thermoplastic-Insulated Wires and Cables
UL 486A	Wire Connectors and Soldering Lugs for Use with Copper Conductors
UL 486C	Splicing Wire Connectors
UL 486E	Equipment Wiring Terminals for Use with Aluminum and/or Copper Conductors
UL 510	Polyvinyl Chloride, Polyethylene, and Rubber Insulating Tape
UL 719	Nonmetallic-Sheathed Cables
UL 1569	Metal-Clad Cable

Submittals: 1. Test Reports.

Products: 1. Service Entrance: Type XHHW.

2. Feeders: Type THHN/THWN through 1/0 and XHHW for 2/0 and larger.

3. Power and lighting wires shall be 600 volt, Type THWN or THHN, conforming to UL 83, remote-control and signal circuits shall be Type TW, THW, or TF, conforming to UL 83. Where lighting fixtures require 90 degree Centigrade (C) conductors, provide only conductors with 90 degree C insulation or better.

4. Fire Pump Feeder: UL listed NFPA 70, Type MI cable as an option to comply with NFPA 70, Paragraph 695.6 (B) when a disconnect is required.

5. Branch-circuit conductors shall be not smaller than No. 12 AWG. Conductors for branch circuits of 120 volts more than 30 meters long and of 277 volts more than 70 meters long, from panel to load center, shall be no smaller than No. 10 AWG. Class 1 remote control and signal circuit conductors shall be not less than No. 14 AWG. Class 2 remote control and signal circuit conductors shall be not less than No. 16 AWG. Class 3 low-energy, remote-control and signal circuits shall be not less than No. 22 AWG.

SECTION 16130 – RACEWAY AND BOXES

Scope: 1. Provide conduit/tubing systems and boxes and supports of types and sizes suitable for the project.
   a. Minimum size of raceway shall be ½ inch conduit.
   b. Nonmetallic conduit/tubing may be used in damp, wet, or corrosive locations when permitted by NFPA 70.
   c. EMT may be installed only within buildings.
   d. Raceways shall be concealed within finished walls, ceilings, and floors where feasible. Where it is not feasible, exposed raceways shall be installed parallel or perpendicular to walls, ceilings, structural members, etc.
   e. Outlet boxes shall not have less than the volume required by NFPA 70 for the number of conductors enclosed in the box.

2. Provide cable tray to conform to NEMA VE 1. Cable tray shall form a wireway system, and shall be a minimum nominal 4 inch depth. Cable trays shall be constructed of copper-free aluminum or zinc-coated steel. Trays shall include splice and end plates, dropouts, and miscellaneous hardware. Edges, fittings, and hardware shall be finished free from burrs and sharp edges. Fittings shall have not less than the load-carrying ability of straight tray sections and shall have manufacturer's minimum standard radius. Radius of bends shall be 24 inches minimum, with larger radii depending on width of cable tray.

References: 1. The publications referenced above (or below) establish minimum requirements for materials, systems and execution which may be specified in this Section.

NATIONAL ELECTRICAL MANUFACTURERS ASSOCIATION (NEMA)

NEMA BU 1	Busways
NEMA OS 1	Sheet-Steel Outlet Boxes, Device Boxes, Covers, and Box Supports
NEMA TC 13	Electrical Nonmetallic Tubing (ENT)
NEMA TC 2	Electrical Polyvinyl Chloride (PVC) Tubing (EPT) and Conduit (EPC-40 and EPC-80)
NEMA VE 1	Metal Cable Tray Systems

UNDERWRITERS LABORATORIES (UL)

UL 1	Flexible Metal Conduit
UL 1242	Intermediate Metal Conduit
UL 360	Liquid-tight Flexible Steel Conduit
UL 5	Surface Metal Raceways and Fittings
UL 514A	Metallic Outlet Boxes
UL 514B	Fittings for Cable and Conduit
UL 6	Rigid Metal Conduit
UL 651	Schedule 40 and 80 Rigid PVC Conduit
UL 651A	Type EB and A Rigid PVC Conduit and HDPE Conduit
UL 797	Electrical Metallic Tubing
UL 857	Busways and Associated Fittings
UL 886	Outlet Boxes and Fittings for Use in Hazardous (Classified) Locations

Products: 1. Zinc Coated Steel Metallic Tubing (EMT), NEMA TC 13 UL 797.

2. Flexible Metal Conduit (FMC), UL 1.

3. Intermediate Metal Conduit (IMC) ANSI C 80.6, UL 1242..

4. Liquidtight Flexible Metal Conduit (LFMC), UL 360.

5. Rigid Metallic Conduit (RMC) ANSI C 80.1, UL 6.

6. Rigid Nonmetallic Conduit (RNC), NEMA TC 2, UL 651.

7. Trough-type cable trays shall be a minimum nominal 18 inch width. Larger width cable trays shall be provided where the installed cables will excel 40% of the capacity of the cable tray.

8. Ladder-type cable trays shall be a minimum nominal 18 inch width. Larger width cable trays shall be provided where the installed cables will exceed 40% of the capacity of the cable tray. Rung spacing shall be on 12 inch maximum centers.

9. Channel-type cable trays shall be 4 inch width. Trays shall be one-piece construction having slots spaced not more than 4 inch on centers.

10. Cantilever-type, center-hung cable trays may be provided at the Contractor's option in lieu of other cable tray types specified.

11. Sheet steel boxes, covers and supports NEMA OS 1, UL 514A.

12. Surface metal raceway UL 5.

SECTION 16140 – WIRING DEVICES

Scope:

1. Provide receptacles, connectors, switches, and finish plates of types and quantities suitable for the project.
   a. Electrical components, devices, and accessories shall be listed and labeled as defined in NFPA 70, Article 100, by a testing agency acceptable to authorities having jurisdiction.
   b. Wiring devices shall meet NEMA WD 1 and dimensional requirements of wiring devices shall meet NEMA WD 6.

2. Provide multi-outlet assemblies, floor boxes, and fire rated poke-throughs of types and quantities suitable for the project.

References:

1. The publications referenced above (or below) establish minimum requirements for materials, systems and execution which may be specified in this Section.

NATIONAL ELECTRICAL MANUFACTURERS ASSOCIATION (NEMA)

NEMA WD 1	General Requirements for Wiring Devices
NEMA WD 6	Wiring Devices – Dimensional Requirements

NATIONAL FIRE PROTECTION ASSOCIATION (NFPA)

NFPA 70	National Electrical Code

UNDERWRITERS LABORATORIES (UL)

UL 1010	Receptacle-Plug Combinations for Use in Hazardous (Classified) Locations
UL 20	General-Use Snap Switches
UL 498	Attachment Plugs and Receptacles
UL 817	Cord Sets and Power

Products:

1. Device Plates:
   a. Device plates on unfinished walls and on fittings shall be of zinc-coated sheet steel, cast metal, or impact resistant plastic having rounded or beveled edges.
   b. Device plates on finished walls shall be steel with baked enamel finish or impact-resistant plastic.
   c. Color to be verified.
   d. Screws shall be of metal with countersunk heads, in a color to match the finish of the plate.

2. Single and Duplex Receptacles:
   a. Shall be rated 20 amperes, 125 volts, 2-pole, 3-wire, grounding type with polarized parallel slots, UL 498 back and side wired.
   b. Color to be verified.

3. Receptacles: Shall be suitable for the environment/application, damp, wet, GFCI, clock type, isolated ground, or explosion proof.

4. Floor Boxes: Shall be adjustable and each outlet shall consist of a cast-metal body with threaded openings for conduits.

5. Wall Switches:
   a. Shall be of the totally enclosed tumbler type, general use, UL 20.
   b. Wiring terminals shall be of the screw type or of the solderless pressure type having suitable conductor-release arrangement.

SECTION 16210 – ELECTRICAL UTILITY SERVICES

Scope: 1. Provide equipment as required by the local utility company for service entrance equipment.

References: 1. The publications referenced above (or below) establish minimum requirements for materials, systems and execution which may be specified in this Section.

AMERICAN NATIONAL STANDARDS INSTITUTE (ANSI)

ANSI C12.1	Code for Electricity Metering
ANSI C12.10	Electromechanical Watthour Meters
ANSI C12.11	Instrument Transformers for Revenue Metering, 10 kV BIL through 350 kV BIL (0.6 kV NSV through 69 kV NSV)
ANSI C12.4	Mechanical Demand Registers
ANSI C39.1	Requirements for Electrical Analog Indicating Instruments

UNDERWRITERS LABORATORIES (UL)

UL 6	Rigid Metal Conduit
UL 651	Schedule 40 and 80 Rigid PVC Conduit
UL 651A	Type EB and A Rigid PVC Conduit and HDPE Conduit
UL 797	Electrical Metallic Tubing
UL 869A	Reference Standard for Service Equipment

Products: 1. Verify exact mounting of pad mount transformer and pad. Verify transformer pad size and requirements with local utility company. Provide transformer pad power the utility company's requirements.

2. Coordinate primary cable and conduit routing and installation with local utility company.

3. Provide secondary service size according to required load on facility. Coordinate requirements with local utility company.

4. Coordinate CT/meter location and requirements with local utility company. Provide required components per applicable standards and local utility company.

SECTION 16220 - MOTORS

Scope:

1. Provide motors suitable for their locations and provide motors with minimum efficiencies at levels recommended by the Department of Energy's Federal Energy Management Program (FEMP).

2. Test motors for phase rotation, starter operation, high potential tests of windings, insulation resistance tests of each winding, vibration, and dielectric absorption.

References:

1. The publications referenced above (or below) establish minimum requirements for materials, systems and execution which may be specified in this Section.

NATIONAL ELECTRICAL MANUFACTURERS ASSOCIATION (NEMA)

NEMA MG 1	Motors and Generators
NEMA MG 10	Energy Management Guide for Selection and use of Polyphase Motors

UNDERWRITERS LABORATORIES (UL)

UL 1004	Electrical Motors
UL 674	Electric Motors and Generators for Use in Division 1 Hazardous (Classified) Locations

Submittals:

1. Product Data.
2. Test Reports.
3. Certificates of Compliance.

Products:

1. Motors, ac, fractional and integral kilowatt, 500 HP and smaller shall conform to NEMA MG 1 and UL 1004 for motors; NEMA MG 10 for energy management selection of polyphase motors; and UL 674 for use of motors in hazardous (classified) locations.

2. The horsepower rating of motors should be limited to no more than 125 percent of the maximum load being served unless a NEMA standard size does not fall within this range. In this case, the next larger NEMA standard motor size should be used.

3. Three-phase motors for use on 3-phase 208-volt systems shall have a nameplate rating of 200 volts. Three-phase motors for use on 3-phase 480 volt systems shall have a nameplate rating of 460 volts. All motors shall have open frame, and continuous-duty classification based on a 40 degree C ambient temperature reference. Polyphase motors shall be squirrel-cage type, having normal-starting-torque and low-starting-current characteristics. The Contractor shall be responsible for selecting the actual horsepower ratings and other motor requirements necessary for the applications indicated. When electrically driven equipment furnished under other sections of these specifications materially differs from the design, the Contractor shall make the necessary adjustments to the wiring, disconnect devices and branch-circuit protection to accommodate the equipment actually installed.

4. Provide premium efficiency motors with efficiencies equal to or greater than Baldor "Super-E" model line.

SECTION 16240 – BATTERY EQUIPMENT

Scope:

1. Emergency light sets shall conform to UL 924 with the number of heads as indicated. Sets shall be permanently connected to the wiring system by conductors installed in short lengths of flexible conduit.

2. Battery chargers shall be installed in conformance with NFPA 70.

References: 1. The publications referenced above (or below) establish minimum requirements for materials, systems and execution which may be specified in this Section.

NATIONAL ELECTRICAL MANUFACTURERS ASSOCIATION (NEMA)

NEMA PE 5	Utility Type Battery Chargers

NATIONAL FIRE PROTECTION ASSOCIATION (NFPA)

NFPA 101	Life Safety Code
NFPA 70	National Electrical Code

UNDERWRITERS LABORATORIES (UL)

UL 1236	Battery Chargers for Charging Engine-Starter Batteries
UL 1564	Industrial Battery Chargers
UL 924	Emergency Lighting and Power Equipment

Warranty: 1. Batteries shall be warranted by the manufacturer for a minimum of three (3) years.

Products: 1. Emergency lighting fixtures and accessories shall be constructed and independently tested to meet the requirements of applicable codes. Batteries shall be Nicad or equal with no required maintenance and shall have a minimum life expectancy of five years and warranty period of three years.

2. Exit signs shall be ENERGY STAR compliant, thereby meeting the following requirements. Input power shall be less than 5 watts per face. Letter size and spacing shall adhere to NFPA 101. Luminance contrast shall be greater than 0.8. Average luminance shall be greater than 15 cd/M^2 measured at normal (0 degree) and 45 degree viewing angles. Minimum luminance shall be greater than 8.6 cd/M^2 measured at normal and 45 degree viewing angles. Maximum to minimum luminance shall be less than 20:1 measured at normal and 45 degree viewing angles. The manufacturer warranty for defective parts shall be at least five years.

3. Battery chargers shall meet NEMA PE 5, UL 1236, UL 1564. Battery chargers shall be general purpose, continuous current output, with solid state rectifiers. Means shall be provided to regulate and to adjust the dc output voltage. Chargers shall have continuous current ratings of 10 to 15 percent higher than battery current outputs based upon an 8-hour discharge.

SECTION 16410 – ENCLOSED SWITCHES AND CIRCUIT BREAKERS

Scope: 1. Provide individually mounted enclosed switches and circuit breakers for feeder and branch-circuit protection, motor and equipment disconnecting means and for service disconnects.

2. Circuit breakers shall be suitable for mounting and operating in any position. Lug shall be listed for copper conductors only in accordance with UL 486E. Single-pole circuit breakers shall be full module size with not more than one pole per module. Multi-pole circuit breakers shall be of the common-trip type having a single operating handle such that an overload or short circuit on any one pole will result in all poles opening simultaneously. Sizes of 100 amperes or less may consist of single-pole breakers permanently factory assembled into a multi-pole unit having an internal, mechanical, nontamperable common-trip mechanism and external handle ties. All circuit breakers shall have a quick-make, quick-break overcenter toggle-type mechanism, and the handle mechanism shall be trip-free to prevent holding the contacts closed.

References: 1. The publications referenced above (or below) establish minimum requirements for materials, systems and execution which may be specified in this Section.

NATIONAL ELECTRICAL MANUFACTURERS ASSOCIATION (NEMA)

NEMA AB 1	Molded Cast Circuit Breakers and Molded Case Switches

NATIONAL FIRE PROTECTION ASSOCIATION (NFPA)

NFPA 70	National Electrical Code

UNDERWRITERS LABORATORIES (UL)

UL 20	General-Use Snap Switches
UL 486E	Equipment Wiring Terminals for Use with Aluminum and/or Copper Conductors
UL 489	Molded-Case Circuit Breakers, Molded-Case Switches, and Circuit-Breaker Enclosures
UL 877	Circuit Breakers and Circuit-Breaker Enclosures for Use in Hazardous (Classified) Locations
UL 943	Ground-Fault Circuit-Interrupters
UL 98	Enclosed and Dead-Front Switches

Products:

1. Molded-case circuit breakers shall conform to NEMA AB 1, UL 489 and UL 877 for circuit breakers and circuit breaker enclosures located in hazardous (classified) locations. Circuit breakers may be installed in panelboards, switchboards, enclosures, motor control centers, or combination motor controllers.

2. Thermal magnetic circuit breakers shall have automatic operation obtained by means of thermal-magnetic tripping devices located in each pole providing inverse time delay and instantaneous circuit protection. The instantaneous magnetic trip shall be adjustable and accessible from the front of all circuit breakers on frame sizes above 150 amperes.

3. HACR circuit breakers 60 amperes or below, 240 volts, 1-pole or 2-pole, intended to protect multi-motor and combination-load installations involved in heating, air conditioning, and refrigerating equipment shall be marked “Listed HACR Type.”

4. Ground fault circuit interrupters to meet UL 943. Breakers equipped with ground fault circuit interrupters shall have ground fault class, interrupting capacity, and voltage and current ratings as indicated.

SECTION 16420 – ENCLOSED CONTROLLERS

Scope:

1. Motor short-circuit protectors shall conform to UL 508 and shall be provided as shown. Protectors shall be used only as part of a combination motor controller which provides coordinated motor branch-circuit overload and short-circuit protection, and shall be rated in accordance with the requirements of NFPA 70.

2. Test operation of controllers and perform dielectric absorption test.

References:

1. The publications referenced above (or below) establish minimum requirements for materials, systems and execution which may be specified in this Section.

NATIONAL ELECTRICAL MANUFACTURERS ASSOCIATION (NEMA)

NEMA 250	Enclosures for Electrical Equipment (1000 Volts Maximum)
NEMA ICS 1	Industrial Control and Systems
NEMA ICS 2	Industrial Controls and Systems Controllers, Contactors, and Overload Relays Rated Note More Than 2,000 Volts AC or 750 Volts DC

NEMA ICS 3 Industrial Control and Systems Factory Built Assemblies
NEMA ICS 6 Industrial Control and Systems, Enclosures

NATIONAL FIRE PROTECTION ASSOCIATION (NFPA)

NFPA 70 National Electrical Code

UNDERWRITERS LABORATORIES (UL)

UL 50 Enclosures for Electrical Equipment
UL 508 Industrial Control Equipment

Submittals:
1. Shop Drawings.
2. Product Data.
3. Test Reports.
4. Certificates of Compliance.
5. Operation and Maintenance Manuals.

Products:
1. Proprietary product names, manufacturers names, model numbers, and colors are given to clarify the designer's intent and are not intended to limit selection of similar products from acceptable manufacturers.

2. Manufacturers:
   a. Cutler Hammer, Eaton Corp.
   b. Siemens Energy & Automation, Inc.
   c. Square D, Schneider Electric.

3. All products provided under this Section shall be manufactured and assembled by the same manufacturer.

4. Manual Motor Starters: Fractional horsepower enclosed, manual motor starter switch with melting alloy thermal overload relay protection. Typical of Square D, Type F.

5. Combination Motor Starter: Full voltage, NEMA rated, enclosed, combination motor starter-circuit breaker with melting alloy overload relay protection. Typical of Square D Class 8539 with MAG-GARD circuit breaker.

6. Reduced Voltage Starters: Reduced voltage (Autotransformer, Wye-Delta, Part Winding, or Solid State), NEMA rated, enclosed motor starter with melting alloy overload relay protection. Typical of Square D Class 8600 or ALTISTART 46.

SECTION 16440 – SWITCHBOARDS, PANELBOARDS, AND CONTROL CENTERS

Scope:
1. Provide switchboards, panelboards, and control centers rated 600 volts and less. Install in conformance with NFPA 70.

2. Provide field testing per NETA ATS:
   a. Insulation resistance, phase-to-phase and phase-to-ground, all combinations.
   b. Contact resistance test, closed.
   c. Manual and electrical operation.

3. Provide dead-front switchboards conforming to NEMA PB 2 and labeled under UL 891. The switchboards shall be completely enclosed self-supporting metal structures with the required number of vertical panel

sections, buses, molded-case circuit breakers, and other devices as required for the situation. Switchboards shall be fully rated. Provide concrete housekeeping pad.

4. Panelboards shall consist of assemblies of molded-case circuit breakers with buses and terminal lugs for the control and protection of branch circuits to motors, heating devices and other equipment operating at 480 volts ac or less. Panelboards shall conform to NEMA PB 1 and be UL 67 labeled. "Loadcenter" type panels are not acceptable. Panelboards shall be designed for installation in surface-mounted or flush-mounted cabinets accessible from the front only, as shown on the drawings. Panelboards shall be fully rated.

5. Motor Control Centers: Control centers shall conform to the requirements of NEMA ICS 1, NEMA ICS 2, NEMA ICS 3 and NEMA ICS 6, and UL 508 and UL 845. Control centers shall be indoor type and shall contain combination starters and other equipment as indicated. Control centers shall be NEMA ICS 2. Each control center shall be mounted on floor sills or mounting channels. Each circuit shall have a suitable metal or laminated plastic nameplate with white cut letters. Motor control centers shall be provided with a full-length ground bus bar. Provide concrete housekeeping pad.

References: 1. The publications referenced above (or below) establish minimum requirements for materials, systems and execution which may be specified in this Section.

AMERICAN SOCIETY FOR TESTING AND MATERIALS (ASTM)

ASTM B 187	Copper Bar, Bus Bar, Rod and Shapes

INSTITUTE OF ELECTRICAL AND ELECTRONICS ENGINEERS (IEEE)

IEEE C62.41	Surge Voltages in Low-Voltage AC Power Circuits

INTERNATIONAL ELECTRICAL TESTING ASSOCIATION

NETA ATS	Acceptance Testing Specifications

NATIONAL ELECTRICAL MANUFACTURERS ASSOCIATION (NEMA)

NEMA AB 1	Molded Case Circuit Breakers and Molded Case Switches
NEMA ICS 1	Industrial Control and Systems
NEMA ICS 2	Industrial Controls and Systems Controllers, Contactors, and Overload Relays Rated Not More Than 2,000 Volts AC or 750 Volts DC
NEMA ICS 3	Industrial Control and Systems Factory Built Assemblies
NEMA ICS 4	Industrial Control and Systems Terminal Blocks
NEMA ICS 6	Industrial Control and Systems, Enclosures
NEMA PB 1	Panelboards
NEMA PB 2	Deadfront Distribution Switchboards

NATIONAL FIRE PROTECTION ASSOCIATION (NFPA)

NFPA 70	National Electrical Code

UNDERWRITERS LABORATORIES (UL)

UL 1022	Line Isolation Monitors
UL 1449	Transient Voltage Surge Suppressors

UL 489	Molded-Case Circuit Breakers, Molded-Case Switches, and Circuit-Breaker Enclosures
UL 50	Enclosures for Electrical Equipment
UL 508	Industrial Control Equipment
UL 67	Panelboards
UL 845	Motor Control Centers
UL 891	Dead-Front Switchboards
UL 98	Enclosed and Dead-Front Switches

Submittals:
1. Shop Drawings.
2. Product Data.
3. Test Reports.
4. Certificates of Compliance.
5. Operation and Maintenance Manuals.

Products:
1. Proprietary product names, manufacturers names, model numbers, and colors are given to clarify the designer's intent and are not intended to limit selection of similar products from acceptable manufacturers.

2. Manufacturers:
   a. Cutler Hammer, Eaton Corp.
   b. Siemens Energy & Automation, Inc.
   c. Square D, Schneider Electric.

3. All products provided under this Section shall be manufactured and assembled by the same manufacturer.

4. Molded Case Circuit Breakers: Molded case circuit breakers shall conform to the applicable requirements of NEMA AB 1 and UL 489. The circuit breakers shall be manually-operated, shall be quick-make, quick-break, common trip type, and shall be automatic-trip type.

5. Controllers: Motor controller units shall contain motor circuit protectors, molded-case circuit breakers, auxiliary and pilot devices and a magnetic contactor with thermal overload relays and/or reduced voltage starter. Where control pushbuttons, indicating lamps, HAND-OFF-AUTOMATIC switches, and similar control devices are associated with a unit, they shall be mounted on the unit compartment door. Door-mounted components shall not interfere with access within the compartments. Molded case circuit breakers for use in combination starters shall meet the requirements of paragraph MOLDED CASE CIRCUIT BREAKERS. Motor circuit protectors shall be only part of the combination starters as required by NFPA 70 and shall conform to all requirements of paragraph MOLDED CASE CIRCUIT BREAKERS, except that trip units shall have provision for locking the selected trip setting.
   a. Combination Motor Starter: Full voltage, NEMA rated, combination motor starter-circuit breaker with melting alloy overload relay protection. Typical of Square D Class 8998 with MAG-GARD circuit breaker.
   b. Reduced Voltage Starters: Reduced voltage (Autotransformer, Wye-Delta, Part Winding, or Solid State), NEMA rated, enclosed with motor starter with melting alloy overload relay protection. Typical of Square D Class 8600 or ALTISTART 46.
   c. Variable-Frequency Controllers: NEMA ICS 2, pulse-width-modulated, variable-frequency controller; listed and labeled as a complete unit and arranged to provide variable speed of the induction motor to be controlled by adjusting output voltage and frequency. Rated to match motor, load type and torque requirements. Internal adjustment capabilities for minimum speed, maximum speed, acceleration, deceleration, and current limit. Self-protection and reliability features include input transient protection, motor overload relay, notch filter, instantaneous overcurrent trip, loss-of-phase protection, reverse-phase protection, under- and overvoltage trips, overtemperature trip, short-circuit protection, and automatic reset/restart. Indicators and controls include status lights, panel-mounted operator station,

indicating devices, and integral disconnecting means. Variable frequency controller typical of Square D ALTIVAR 58.

6. Switchboards:
   a. All buses shall be of copper and all bolted splices and connections between buses and for extensions or taps for equipment shall be tin or silver-plated throughout. Copper bars and shapes for bus conductors shall conform to the applicable requirements of ASTM B 187.
   b. A copper ground bus, rated not less than 300 amps, extending the entire length of the assembled structure, shall be mounted near the bottom of enclosure.
   c. Each switchboard shall be equipped with molded-case circuit breakers conforming to paragraph MOLDED CASE CIRCUIT BREAKERS.
   d. Switchboards typical of Square D QED-S.

7. Panelboards:
   a. Enclosures shall meet the requirements of UL 50. All cabinets shall be fabricated from sheet steel of not less than 14 gauge.
   b. All panelboards shall be of the dead-front type with buses and circuit breakers mounted on a plate or base for installation as a unit in a cabinet. All buses shall be copper and shall be tin or silver-plated throughout.
   c. Lighting and appliance panelboards typical of Square D NQOD or NF as required.
   d. Distribution panelboards typical of Square D I-Line or QED-S as required.

SECTION 16460 – LOW-VOLTAGE TRANSFORMERS

Scope:

1. Provide dry type distribution and specialty transformers rated 1000 volts and less. Installed in accordance with NFPA 70.

2. Provide field testing per NETA ATS test turns ratio and insulation resistance for each phase-to-ground.

3. Description: Factory-assembled and –tested, air-cooled units, designed for 60 HZ service and in compliance with NEMA ST 20 and NEMA TP-1 and TP-2.

4. Cores: Grain-oriented, nonaging silicon steel.

5. Coils: Electrical grade aluminum. Continuous windings without splices, except for taps.

6. Internal Coil Connections: Brazed or pressure type.

7. Enclosure: Class complies with NEMA 250 for the environment in which installed.

8. Provide concrete housekeeping pad.

References:

1. The publications referenced above (or below) establish minimum requirements for materials, systems and execution which may be specified in this Section.

INSTITUTE OF ELECTRICAL AND ELECTRONICS ENGINEERS (IEEE)

IEEE C57.13	Instrument Transformers
IEEE Std 81	Guide for Measuring Earth Resistivity, Ground Impedance, and Earth Surface Potentials of a Ground System

INTERNATIONAL ELECTRICAL TESTING ASSOCIATION (NETA)

NETA ATS Acceptance Testing Specifications

NATIONAL ELECTRICAL MANUFACTURERS ASSOCIATION (NEMA)

NEMA 250 Enclosures for Electrical Equipment (1000 Volts Maximum)
NEMA ST 20 Dry-Type Transformers for General Applications
NEMA TP-1 Guide for Determining Energy Efficiency for Distribution Transformers
NEMA TP-2 Test Method for Measuring the Energy Consumption of Distribution Transformers

NATIONAL FIRE PROTECTION ASSOCIATION (NFPA)

NFPA 70 National Electrical Code

UNDERWRITERS LABORATORIES (UL)

UL 506 Specialty Transformers

Submittals:
1. Shop Drawings.
2. Product Data.
3. Test Reports.
4. Certificates of Compliance.
5. Operation and Maintenance Manuals.

Products:
1. Proprietary product names, manufacturers names, model numbers, and colors are given to clarify the designer's intent and are not intended to limit selection of similar products from acceptable manufacturers.

2. Manufacturers:
   a. Cutler Hammer, Eaton Corp.
   b. Siemens Energy & Automation, Inc.
   c. Square D, Schneider Electric.

3. All products provided under this Section shall be manufactured and assembled by the same manufacturer.

4. Dry type transformers shall have 220 degrees C insulation system for transformers 15 kVA and greater, and shall have 180 degrees C insulation system for transformers rated 10 kVA and less, with temperature rise not exceeding 150 or 115 degrees C under full-rated load in maximum ambient temperature of 40 degrees C. Transformer of 150 degrees C temperature rise shall be capable of carrying continuously 100 percent of nameplate kVA without exceeding insulation rating. Transformer of 115 degrees C temperature rise shall be capable of carrying continuously 115 percent of nameplate kVA without exceeding insulation rating. Transformers comply with NEMA TP-1 and are typical of Square D Type EE.

5. Instrument transformers shall comply with UL 506, ANSI C12.11 and IEEE C57.13. Instrument transformers shall be configured for mounting in/on the device to which they are applied.

6. Taps: For transformers 3 kVA and larger, full-capacity taps in high-voltage windings shall be as follows:
   a. Taps, 3 through 25 kVA: Two 5-percent taps below rated high voltage.
   b. Taps, 3 through 10 kVA: Two 5-percent taps below rated high voltage.
   c. Taps, 15 through 500 kVA: Six 2.5-percent taps, 2 above and 4 below rated high voltage.
   d. Taps, 750 kVA and Above: Four 2.5 percent taps, 2 above and 2 below rated high voltage.

7. K-Factor Rating: Provide transformers K-factor rated and listed to comply with UL 1561 requirements for nonsinusoidal load current handling capability as required for non linear loads.

a. Transformer design prevents overheating when carrying full load with harmonic content corresponding to the designated K-factor.
b. Nameplate states the designated K-factor of the transformer.
c. Typical of Square D NLP Series.

SECTION 16510 – INTERIOR LUMINAIRES

Scope:

1. Provide interior luminaires of types and quantities suitable for the project. Installed per NFPA 70.

2. Lamps, lampholders, ballasts, transformers, electronic circuitry, and other lighting system components shall be constructed according to industry standards.

3. Interior luminaires shall be tested and listed by a recognized independent testing laboratory for the expected installation conditions.

4. Resulting lighting system shall comply with IESNA LHBK.

References:

1. The publications referenced above (or below) establish minimum requirements for materials, systems and execution which may be specified in this Section.

AMERICAN NATIONAL STANDARDS INSTITUTE (ANSI)

ANSI C78.1	Fluorescent Lamps – Rapid-Start Types – Dimensional and Electrical Characteristics
ANSI C78.1350	Electric Lamps – 400-Watt, 100-Volt, S51 Single-Ended High-Pressure Sodium Lamps
ANSI C78.1351	Electric Lamps – 250-Watt, 100-Volt S50 Single-Ended High-Pressure Sodium Lamps
ANSI C78.1352	Electric Lamps – 1000-Watt, 250-Volt, S52 Single-Ended High-Pressure Sodium Lamps
ANSI C78.1355	Electric Lamps – 150-Watt, 55-Volt S55 High-Pressure Sodium Lamps
ANSI C78.1375	400-Watt, M59 Single-Ended Metal-Halide Lamps
ANSI C78.1376	1000-Watt, M47 Metal-Halide Lamps
ANSI C78.20	Electric Lamps – Characteristics of Incandescent Lamps A, G, PS, and Similar Shapes with E26 Medium Screw Bases
ANSI C78.21	Physical and Electrical Characteristics – Incandescent Lamps – PAR and R Shapes
ANSI C78.2A	18 & 26-Watt, Compact Fluorescent Quad Tube Lamps
ANSI C78.2B	9 & 13-Watt, Compact Fluorescent Quad Tube Lamps
ANSI C82.1	Specifications for Fluorescent Lamp Ballasts
ANSI C82.4	Ballasts for High-Intensity-Discharge and Low-Pressure Sodium Lamps (Multiple-Supply Type)

ILLUMINATING ENGINEERING SOCIETY OF NORTH AMERICA (IESNA)

IES LHBK	Lighting Handbook, Reference and Application

NATIONAL FIRE PROTECTION ASSOCIATION (NFPA)

NFPA 101	Life Safety Code
NFPA 70	National Electrical Code

UNDERWRITERS LABORATORIES (UL)

UL 1029	High-Intensity-Discharge Lamp Ballasts
UL 1570	Fluorescent Lighting Fixtures
UL 1571	Incandescent Lighting Fixtures
UL 1572	High Intensity Discharge Lighting Fixtures
UL 542	Lampholders, Starters, and Starter Holders for Fluorescent Lamps
UL 844	Electric Lighting Fixtures for Use in Hazardous (Classified) Locations
UL 935	Fluorescent-Lamp Ballasts

Products:

1. Lamps:
   a. Incandescent and tungsten halogen lamps shall be rated for minimum life of 2,000 hours, and shall have color temperature between 2,800 and 3,200 degrees Kelvin. Lamps shall comply with ANSI C78.20 and sections 238 and 270 of ANSI C78.21.
   b. Fluorescent lamps shall have color temperature of 3,500 degrees Kelvin. Fluorescent lamps shall comply with ANSI C78.1.
   c. Linear fluorescent lamps shall be 32 watt T8, 265 mA, with minimum CRI of 75.
   d. Small compact fluorescent lamps shall be twin, double, or triple tube with bi-pin or four-pin snap-in base and shall have minimum CRI of 85. Minimum starting temperature shall be 0 degrees C for twin tube lamps and for double and triple twin tube lamps without internal starter; and –9 degrees C for double and triple twin tube lamps with internal starter.
   e. Long compact fluorescent lamps shall be 18, 27, 39, 40, 50, or 55 watt bi-axial type with four-pin snap-in base; shall have minimum CRI of 85; and shall have a minimum starting temperature of 10 degrees C.
   f. High intensity discharge lamps shall have medium or mogul screw base and minimum starting temperature of –29 degrees C. Metal halide lamps shall have minimum CRI of 65; color temperature of 4,300 degrees Kelvin. Lamps shall comply with all applicable ANSI C78.1350, ANSI C78.1351, ANSI C78.1352, ANSI C78.1355, ANSI C78.1375, and ANSI C78.1376.

2. Ballasts and Transformers:
   a. Low voltage incandescent transformers shall be Class II UL listed 120/12 volt or 120/24 volt step-down transformers as required for the lamps.
   b. Fluorescent ballasts shall comply with ANSI C82.1. Ballasts shall have maximum current crest factor of 1.7; high power; Class A sound rating; maximum operating case temperature of 25 degrees C above ambient; and shall be rated Class P.
   c. Compact fluorescent ballasts shall comply with IEEE C62.41 Category A transient voltage variation requirements. Ballasts shall have minimum ballast factor of 0.95; maximum current crest factor of 1.6; high power factor; maximum operating case temperature of 25 degrees C above ambient; shall be rated Class P; and shall have a sound rating of Class A. Ballasts shall meet FCC Class A specifications for EMI/RFI emissions.
   d. Electronic fluorescent ballasts shall comply with 47 CFR 18 for electromagnetic interference. Ballasts shall withstand line transients per IEEE C62.41, Category A. Ballasts shall have total harmonic distortion between 10 and 20%; minimum frequency of 20,000 Hz; filament voltage between 2.5 and 4.5 volts; maximum starting inrush current of 20 amperes.
   e. Dimming fluorescent ballasts shall be electronic.
   f. Dimming compact fluorescent ballasts shall be electronic. Ballast power factor shall be <90% throughout dimming range. THD shall be <10% at maximum light output and <20% at minimum light output.
   g. High intensity discharge ballasts shall comply wit UL 1029 and, if multiple supply types, with ANSI C82.4. Ballasts shall have minimum ballast factor of 0.9; high power factor; Class A sound rating; and maximum operating case temperature of 25 degrees C above ambient. Electronic high intensity discharge ballasts shall be constant wattage autotransformer type; shall have less than 10% ballast loss; shall have total harmonic distortion between 10 and 20%; and shall have a minimum starting

temperature of –18 degrees C. Magnetic high intensity discharge ballasts shall have a minimum starting temperature of –29 degrees C.

#1 SECTION 16520 – EXTERIOR LUMINAIRES

Scope:

1. Provide exterior luminaries complete with lamps, ballasts, pole standard and accessories. Luminaires to be listed and labeled by UL and comply with ANSI C2. Provide components that comply and are installed per NFPA 70. Provide a 10 foot ground rod next to each pole and ground to it with **a #6 AWG bare copper conductor.**

2. Provide luminaire control devices to control exterior luminaries including the following: time switches, photoelectric relays, occupancy sensors, and multipole lighting relays and contactors.

References:

1. The publications referenced above (or below) establish minimum requirements for materials, systems and execution which may be specified in this Section.

AMERICAN ASSOCIATION OF STATE HIGHWAY AND TRANSPORTATION OFFICIALS (AASHTO)

AASHTO LTS-3	Structural Supports for Highway Signs, Luminaires and Traffic Signals

AMERICAN NATIONAL STANDARDS INSTITUTE (ANSI)

ANSI C78.1350	Electric Lamps – 400-Watt, 100-Volt, S51 Single-Ended High-Pressure Sodium Lamps
ANSI C78.1351	Electric Lamps – 250-Watt, 100-Volt S50 Single-Ended High-Pressure Sodium Lamps
ANSI C78.1352	Electric Lamps – 1000-Watt, 250-Volt, S52 Single-Ended High-Pressure Sodium Lamps
ANSI C78.1355	Electric Lamps – 150-Watt, 55-Volt S55 High-Pressure Sodium Lamps
ANSI C78.1375	400-Watt, M59 Single-Ended Metal-Halide Lamps
ANSI C78.1376	1000-Watt, M47 Metal-Halide Lamps
ANSI C80.1	Rigid Steel Conduit – Zinc Coated
ANSI C82.4	Ballasts for High-Intensity-Discharge and Low-Pressure Sodium Lamps (Multiple-Supply Type)
ANSI C119.1	Sealed Insulated Underground Connector Systems Rated 600 Volts
ANSI C135.1	Galvanized Steel Bolts and Nuts for Overhead Line Construction
ANSI C135.14	Staples with Rolled or Slash Points for Overhead Line Construction
ANSI C135.30	Zinc-Coated Ferrous Ground Rods for Overhead or Underground Line Construction
ANSI C136.2	Luminaires, Voltage Classification of Roadway Lighting Equipment
ANSI C136.21	Roadway Lighting – Vertical Tenons Used with Post-Top-Mounted Luminaires
ANSI C136.3	Roadway Lighting Equipment-Luminaire Attachments
ANSI C136.6	Roadway Lighting Equipment – Metal Heads and Reflector Assemblies - Mechanical and Optical Interchangeability
ANSI C136.9	Roadway Lighting – Socket Support Assemblies for Use in Metal Heads – Mechanical Interchangeability
ANSI C136.10	Roadway Lighting – Locking-Type Photocontrol Devices and Mating Receptacles – Physical and Electrical Interchangeability and Testing
ANSI C136.11	Multiple Sockets for Roadway Lighting Equipment
ANSI C136.15	Roadway Lighting, High Intensity Discharge and Low Pressure Sodium Lamps in Luminaires

ANSI C136.20	Roadway Lighting Equipment – Fiber Reinforced-Plastic (FRP) Fiber Lighting Poles
ANSI O5.1	Specifications and Dimensions for Wood Poles

AMERICAN SOCIETY FOR TESTING AND MATERIALS (ASTM)

ASTM A 36/A 36M	Carbon Structural Steel
ASTM A 48	Gray Iron Castings
ASTM A 48M	Gray Iron Castings (Metric)
ASTM A 123/A 123M	Zinc (Hot-Dip Galvanized) Coatings on Iron and Steel Products
ASTM A 153/A 153M	Zinc Coating (Hot-Dip) on Iron and Steel Hardware – AASHTO No.: M232
ASTM A 575	Steel Bars, Carbon, Merchant Quality, M-Grades
ASTM A 576	Steel Bars, Carbon, Hot-Wrought, Special Quality
ASTM B 2	Medium-Hard-Drawn Copper Wire
ASTM B 8	Concentric-Lay-Stranded Copper Conductors, Hard, Medium-Hard, or Soft
ASTM B 108	Aluminum-Alloy Permanent Mold Castings
ASTM B 117	Operating Salt Spray (Fog) Apparatus
ASTM C 478	Precast Reinforced Concrete Manhole Sections
ASTM D 1654	Evaluation of Painted or Coated Specimens Subjected to Corrosive Environments

ILLUMINATING ENGINEERING SOCIETY OF NORTH AMERICAN (IESNA)

IES LHBK	Lighting Handbook, Reference and Application
IESNA RP-8	Roadway Lighting

INSTITUTE OF ELECTRICAL AND ELECTRONICS ENGINEERS (IEEE)

IEEE C2	National Electrical Safety Code (ANSIL/IEEE)
IEEE C62.41	Surge Voltages in Low-Voltage AC Power Circuits
IEEE C136.3	Roadway Lighting Equipment – Luminaire Attachments
IEEE C136.10	Roadway Lighting Equipment – Locking-Type Photocontrol Devices and Mating Receptacle Physical and Electrical Interchangeability and Testing
IEEE C136.13	Roadway Lighting – Metal Brackets for Wood Poles
IEEE Std 81	Guide for Measuring Earth Resistivity, Ground Impedance, and Earth Surface Potentials of a Ground System (Part 1)

NATIONAL ELECTRICAL MANUFACTURERS ASSOCIATION (NEMA)

NEMA 250	Enclosures for Electrical Equipment (1000 Volts Maximum)
NEMA C78.42	Electric Lamps – High-Pressure Sodium Lamps
NEMA C78.1375	Electric Lamps – 400-Watt, M59 Single-Ended Metal-Halide Lamps
NEMA C78.1376	Electric Lamps – 1000-Watt, M47 Single-Ended Metal-Halide Lamps
NEMA C78.1377	Electric Lamps – 175 Watt, M57 Single-Ended Metal-Halide Lamps
NEMA C78.1378	Electric Lamps – 250-Watt, M58 Single-Ended Metal-Halide Lamps
NEMA C78.1379	Electric Lamps – 1500-Watt, M48 Single-Ended Metal-Halide Lamps
NEMA C78.1381	Electric Lamps – 70-Watt, M85 Double-Ended Metal-Halide Lamps
NEMA C82.4	Ballasts for High-Intensity-Discharge and Low-Pressure Sodium Lamps (Multiple-Supply Type)
NEMA ICS 1	Industrial Control and Systems
NEMA ICS 2	Industrial Control and Systems Controllers, Contactors, and Overload Relays Rated Not More Than 2,000 Volts AC or 750 Volts DC

NEMA ICS 6	Industrial Control and Systems, Enclosures
NEMA OS 1	Sheet-Steel Outlet Boxes, Device Boxes, Covers, and Box Supports
NEMA OS 2	Nonmetallic Outlet Boxes, Device Boxes, Covers and Box Supports

NATIONAL FIRE PROTECTION ASSOCIATION (NFPA)

NFPA 70	National Electrical Code

UNDERWRITERS LABORATORIES (UL)

UL 773	Plug-In, Locking Type Photocontrols for Use with Area Lighting
UL 773A	Nonindustrial Photoelectric Switches for Lighting Control
UL 1029	High-Intensity-Discharge Lamp Ballasts
UL 1572	High-Intensity-Discharge Lighting Fixtures
UL 1598	Luminaires

Products:

1. Provide astronomic dial type or electronic type time switches, arranged to turn “ON” at sunset, and turn “OFF” at predetermined time between 8:30 p.m. and 2:30 a.m. or sunrise, automatically changing the settings each day in accordance with seasonal changes of sunset and sunrise. Provide switch rated 120 or 277 volts, having automatically wound spring mechanism or capacitor, to maintain accurate time for a minimum of 7 hours following power failure. Provide time switch with a manual on-off bypass switch. Housing for the time switch shall be surface mounted, NEMA 3R enclosure conforming to NEMA ICS 6.

2. Provide photocell switch to meet UL 773 or UL 773A, hermetically sealed cadmium-sulfide or silicon diode type cell rated 120 or 277 volts ac, 60 Hz with single-throw contacts designed to fail to the ON position. Switch shall turn on at or below 3 fc and off at 2 to 10 fc. A time delay shall prevent accidental switching from transient light sources.

3. Provide poles designed for wind loading in accordance with AASHTO LTS-3 while supporting luminaries having effective projected areas indicated. Poles shall be embedded or anchor-base type designed for use with underground or overhead supply conductors. Poles shall have oval-shaped handhole having a minimum clear opening of 2.5 x 5.0 inch. Handhole cover shall be secured by stainless steel captive screws. Poles shall have an internal grounding connection accessible from the handhole near the bottom of each pole. Scratched, stained, chipped, or dented poles shall not be installed.
   a. Provide aluminum poles manufactured of corrosion resistant aluminum alloys conforming to AASHTO LTS-3 for Alloy 6063-T6 or Alloy 6005-T5 for wrought alloys and Alloy 356-T4 (3, 5) for cast alloys. Poles shall be seamless extruded or spun seamless type with minimum 3/16 inch wall thickness.
   b. Provide steel poles to meet AASHTO LTS-3. Steel poles shall have minimum 11-gage steel with minimum yield/strength of 331 MPa and hot-dipped galvanized in accordance with ASTM A 123/A 123M factory finish.

4. Provide ballasts for High-Intensity-Discharge (HID) luminaries to meet UL 1029 and NEMA C82.4, and shall be constant wattage autotransformer (CWA) or regulator, high power-factor type, unless otherwise indicated. Provide single-lamp ballasts which shall have a minimum starting temperature of minus 30 degrees C. HPS ballasts shall have a solid-state igniter/starter with an average life in the pulsing mode of 10,000 hours at the intended ambient temperature. Igniter case temperature shall not exceed 90 degrees C.

5. Provide lighting contactor to meet NEMA ICS 2, electrically or mechanically held contactor. Contacts shall be rated 120 or 277 volts, 30 amperes, and the number of poles required for each installation. Coils shall be rated 120 or 277 volts. Provide in NEMA 4 enclosure conforming to NEMA ICS 6. Contactor shall have silver alloy double-break contacts and coil clearing contacts for mechanically held contactor and shall

require no arcing contacts. Provide contactor with hand-off-automatic or on-off selector switch as required for each installation. Contact shall be hermetically sealed.

6. Provide luminaires complete with lamps of number, type, and wattage as required to achieve required light level within each area. Details, shapes, and dimensions are indicative of the general type desired, but are not intended to restrict selection to luminaries of a particular manufacturer. Luminaires of similar designs, light distribution and brightness characteristics, and of equal finish and quality will be acceptable as approved.

7. Lamps shall be high-pressure sodium (HPS) lamps. NEMA C78.42 wattage as indicated. HPS lamps shall have average rated life of 16,000 hours (minimum) for 35 watt lamps and 24,000 hours (minimum) for all higher wattage lamps. 150 watt lamps, if required, shall be 55 volt lamps.

#1

SECTION 16710 – COMMUNICATIONS CIRCUITS

Scope:

1. Provide building conduit of types as applicable:
   a. Service entrance from utility source to Training Building.
   b. Interior telephone raceway system.

2. Provide building cabling infrastructure of types as applicable:
   a. Voice Cabling Category 6.
   b. Data Cabling Category 6.
   c. Fiber Optic Cabling (Single or Multimode).
   d. Telephone Equipment.
   e. Equipment Racks.

References:

1. The publications referenced above (or below) establish minimum requirements for materials, systems and execution which may be specified in this Section.

ELECTRONICS INDUSTRIES ALLIANCE (EIA)

EIA ANSI/TIA/EIA-568-B	Commercial Building Telecommunications Cabling Standard
EIA ANSI/TIA/EIA-569-A	Commercial Building Standard for Telecommunications Pathways and Spaces
EIA ANSI/TIA/EIA-606	Administration Standard for the Telecommunications Infrastructure of Commercial Buildings
EIA ANSI/TIA/EIA-568-B.2-1	Transmission Performance Specifications for 4 Pair 100 Ohm Category 6 Cabling
EIA ANSI/TIA/EIA-607	Commercial Building Grounding and Bonding Requirements for Telecommunications

IBM CORPORATION (IBM)

IBM GA27-3361-07	LAN Cabling System – Planning and Installation
IBM GA27-3773-0	Cabling System Technical Interface Specifications

INSULATED CABLE ENGINEERS ASSOCIATION (ICEA)

ICEA S-80-576	Communications Wire and Cable for Wiring of Premises
ICEA S-83-596	Fiber Optic Premises Distribution Cable

NATIONAL FIRE PROTECTION ASSOCIATION (NFPA)

NFPA 70 National Electrical Code

UNDERWRITERS LABORATORIES (UL)

UL 50 Enclosures for Electrical Equipment

Products:

1. Provide 4 inch service entrance conduits as required from utility source to Training Building. Encase in concrete duct bank where crossing roadways.

2. Coordinate and request from local service provider the number of cable pairs required.

3. Provide minimum 1” conduit required for interior raceway system. System shall include standard dual communications outlets for voice and data.

4. Telephone cabling shall be plenum rated 4-pair Category 6, #24 AWG. Cabling shall run from 110 type patch panels to the 8-pin, RJ-45 Category 6 rated Jack. Termination of Telephone shall be in accordance with ANSI/TIA/EIA-568-B pinout configuration T568-A. Cabling and terminations shall be tested in accordance with ANSI/TIA/EIA-568-B. Provide strain relief brace kits for all 110 type patch panels.

5. Data cabling shall be plenum rated 4-pair Category 6, #24 AWG. Cabling shall run from 110 type patch panels strain relief to the 8-pin, RJ-45 Category 6 rated Jack. Termination of Data shall be in accordance with ANSI/TIA/EIA-568-B pinout configuration T568-A. Cabling and terminations shall be tested in accordance with ANSI/TIA/EIA-568-B.

6. Fiber Optic cabling if available shall be coordinated with local service provider and shall be in accordance with ANSI/TIA/EIA-568-B.

7. Equipment Racks shall be open frame racks bolted to the floor. Cable guides shall be bolted or screwed to the racks. Racks shall be installed level. Ganged racks shall be bolted together and have adjacent side panels removed. Louvers shall be at the Owner’s request.

8. Provide all Category 6 patch cords for final connections to computers and for inter-connection of LAN equipment in computer rooms.

9. All voice riser cables and fiber optic backbone cabling and associated terminations shall be tested in accordance with ANSI/TIA/EIA-568-B.

10. All cabling shall be in conduit and/or cable tray.

SECTION 16720 – INTERCOMMUNICATION EQUIPMENT

Scope:

1. Provide two separate systems:
   a. Public Address System for the Assembly Hall with multiple microphones, multiple music sources, and paging mute input from the AT/FP Paging System.
   b. AT/FP Paging System with single microphone, telephone interface input, mute output to Assembly Hall PA System, but no music sources.

2. Provide building paging and public address equipment:
   a. Amplifiers.
   b. Mixers.
   c. Microphones.
   d. Speakers.
   e. Speaker Enclosures.
   f. Audio Sources.
   g. Priority Relays and Controls.
   h. Volume Control.
   i. Equipment Rack.
   j. Cabling.
   k. Surge Protection.

References: 1. The publications referenced above (or below) establish minimum requirements for materials, systems and execution which may be specified in this Section.

AMERICAN NATIONAL STANDARDS INSTITUTE (ANSI)

ANSI S3.2 (ASA 85)	Method for Measuring the Intelligibility of Speech Over Communications Systems
ANSI S4.26	Loudspeaker Components Used in Professional Audio and Sound Reinforcement

ELECTRONIC INDUSTRIES ASSOCIATION (EIA)

EIA ANSI/EIA-310-D	Cabinets, Racks, Panels, and Associated Equipment
EIA ANSI/EIA-568-B	Commercial Building Telecommunications Cabling Standard

NATIONAL FIRE PROTECTION ASSOCIATION (NFPA)

NFPA 70	National Electrical Code

UNDERWRITERS LABORATORIES (UL)

UL 813	Standard for Safety Commercial Audio Equipment, Seventh Edition

Products: 1. Products shall as a minimum conform to the following specifications:
   a. Amplifiers rated power output to be 300 watts RMS, frequency response + or – 2db, 60-13,000 Hz. Output voltage 70.7, 25, 22, and 15.5 volts. Power requirements 110-125 VAC 60 Hz.
   b. Mixer – Preamplifier rated output to be 18db, with frequency response + or - 1db, 20 – 20,000 Hz. Inputs shall be 5 independent balanced low-impedance, transformer- isolated. Tone controls will be + or – 10db range at 50 and 15,000 Hz. Power requirements 110-125 VAC 60 HZ.
   c. Mixer – Amplifier rated power output to be 100 watts RMS, with a frequency response + or- 2db, 60-13,000 Hz. Inputs shall be 2 microphone high impedance or low-impedance unbalanced and 2 Auxiliary high impedance. Output voltage shall be 25 or 70 volts. Power requirements 110-125 VAC 60 Hz.
   d. Microphones shall be a dynamic with a frequency response of 50 -12,000 Hz. Front-to-back ratio shall be 20db. Microphone connections shall be three-pole, polarized, locking type. Microphone shall include floor stand 35”-63” chrome tube assembly with grip action for locking control.
   e. Loudspeakers shall consist of a plenum backbox, support bracket, and grille for application in wall baffle and ceiling. Loudspeakers frequency range will be 60-12,000 Hz, with a normal power rating of 7 watts and peak power rating of 10 watts. Transformers shall be 25/70 volt line type with capacity of 2 watts.

f. Horn Speakers shall weatherproof with a frequency response of 400-14,000 Hz. Power taps 70 volt line - .9, 1.8, 3.8, 7.5, and 15 watts. Normal power rating of 7 watts and peak power rating of 15 watts.
g. Speaker enclosures shall be tuned –port design for precise balancing and tuning of the speaker. Enclosure shall be constructed of 3-4" High density board, with screwed and glued joints, durably braced, and padded with fiberglass where acoustically required.
h. AM/FM tuner shall be rack mounted and provide optimal tuning ranges. Power requirements 110-125 Vac, 60 Hz.
i. AM/FM Antenna shall be roof mounted and provide optimal reception for AM/FM tuner. Antenna shall be supported 1.5m clear above the roof line. Provide all required lightning protection, hardware, and materials. The 75 ohm coaxial cable shall not exceed an attenuation of 2.5db at 108 MHz, between the antenna and the amplifier.
j. Compact Disc Player shall have three beam laser pickup, dual digital-to-analog converters, random access and random mode programmable playback. Player shall have capability to play up to 6 disc automatically.
k. Cassette Tape Equipment shall be a dual well deck with hard parmalloy play heads, and auto reverse. Power requirements are 110-125 Vac, 60 Hz.
l. Provide priority relays and controls as required.
m. Equipment racks shall be 19" racks in accordance with EIA ANSI/EIA/310-D. Ventilated rear panels, solid side panels, and solid top panels shall be provided.
n. Cabling shall be of gauge required depending upon the cable run length. Wire shall be polyvinyl chloride (PVC). Cabling in no case shall ever be smaller than 20 AWG.
o. Provide surge protection on all major components. This shall offer complete protection against voltage spikes and current surges originating from commercial power sources.
p. Provide major components of the system with internal protection circuits which protects the components from mismatched loads, direct current, and shorted output lines.
q. Provide the operating staff with 8 hour of hands on training. Schedule training with staff to fit their schedule.

END OF OUTLINE SPECIFICATION