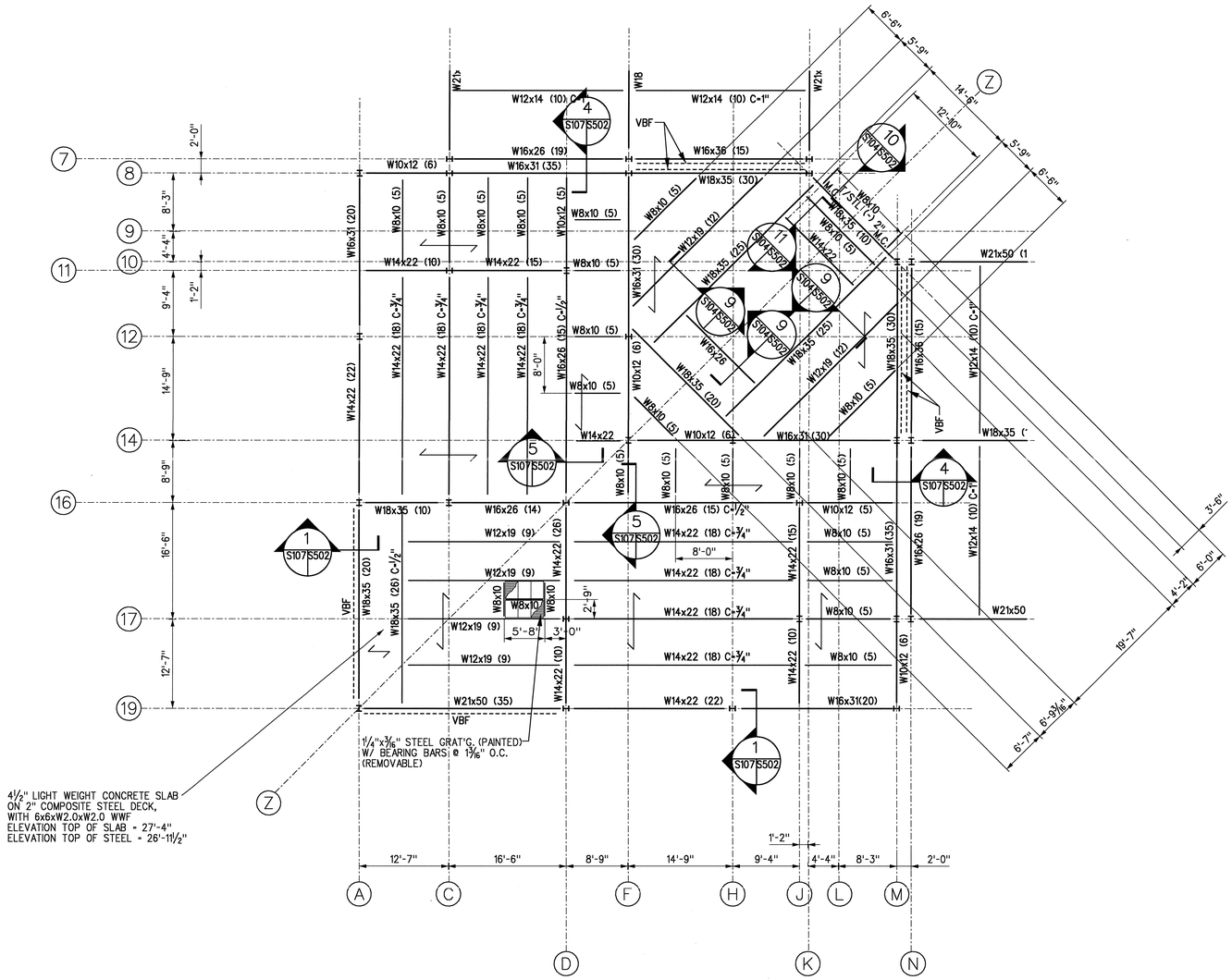


1 S107 S107 PARTIAL 3RD FLOOR FRAMING PLAN AREA A
SCALE = 1/8" = 1'-0"

NOTES

1. DASHED LINE INDICATES LOCATION OF BRACED BAY. SEE DRAWINGS S201 & S202.
2. INDICATES SPAN OF DECK AND SLAB
3. BEAMS ARE LOCATED AT EQUAL SPACING BETWEEN COLUMN GRID LINES, U.N.O.
4. CONTRACTOR SHALL PROVIDE CELL CLOSURES AND POUR STOPS AS REQUIRED FOR CONCRETE DECK PLACEMENT.
5. NUMBER IN PARENTHESES AFTER BEAM MARK IS NUMBER OF FIELD APPLIED HEADED STUDS
6. SEE DWG. S-501 FOR COLUMN & BASE PLATE SCHEDULES.
7. C=3/4" DENOTES AMOUNT OF CAMBER REQUIRED FROM FABRICATOR
8. SEE CIVIL DRAWINGS FOR BUILDING ORENTATION.

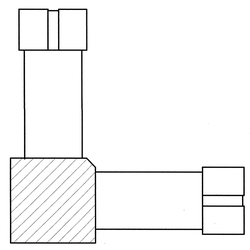

KEY PLAN

8 6 4 2 0 8 16FT
SCALE: 1/8"=1'-0"

US ARMY CORPS OF ENGINEERS
SAVANNAH DISTRICT

| DESIGNED BY | CHECKED BY | SIZE F. |
|---|---|---|
| CATEGORY CODE 721-81-06 | | |
| CONTRACT NO: DACA21-02-C-0046 | | |
| DATE: 23 APRIL 2003 | | |
| PLOT SCALE: 1 | | |

CLARK CONSTRUCTION
CLARK DESIGN/BUILD, LLC

| SYMBOL | DESCRIPTION | DATE | BY |
|---|---|---|---|

BASIC COMBAT TRAINEE BARRACKS COMPLEX I
FORT JACKSON, SOUTH CAROLINA
TRAINEE BARRACKS

PARTIAL 3RD FLOOR FRAMING PLAN AREA A

PLATE REFERENCE NUMBER:
S-107
SHEET 61

DESIGN FILE: $$FILE NAME$$
$$DATE$$

CONFORMED DRAWINGS 12 /19 /03

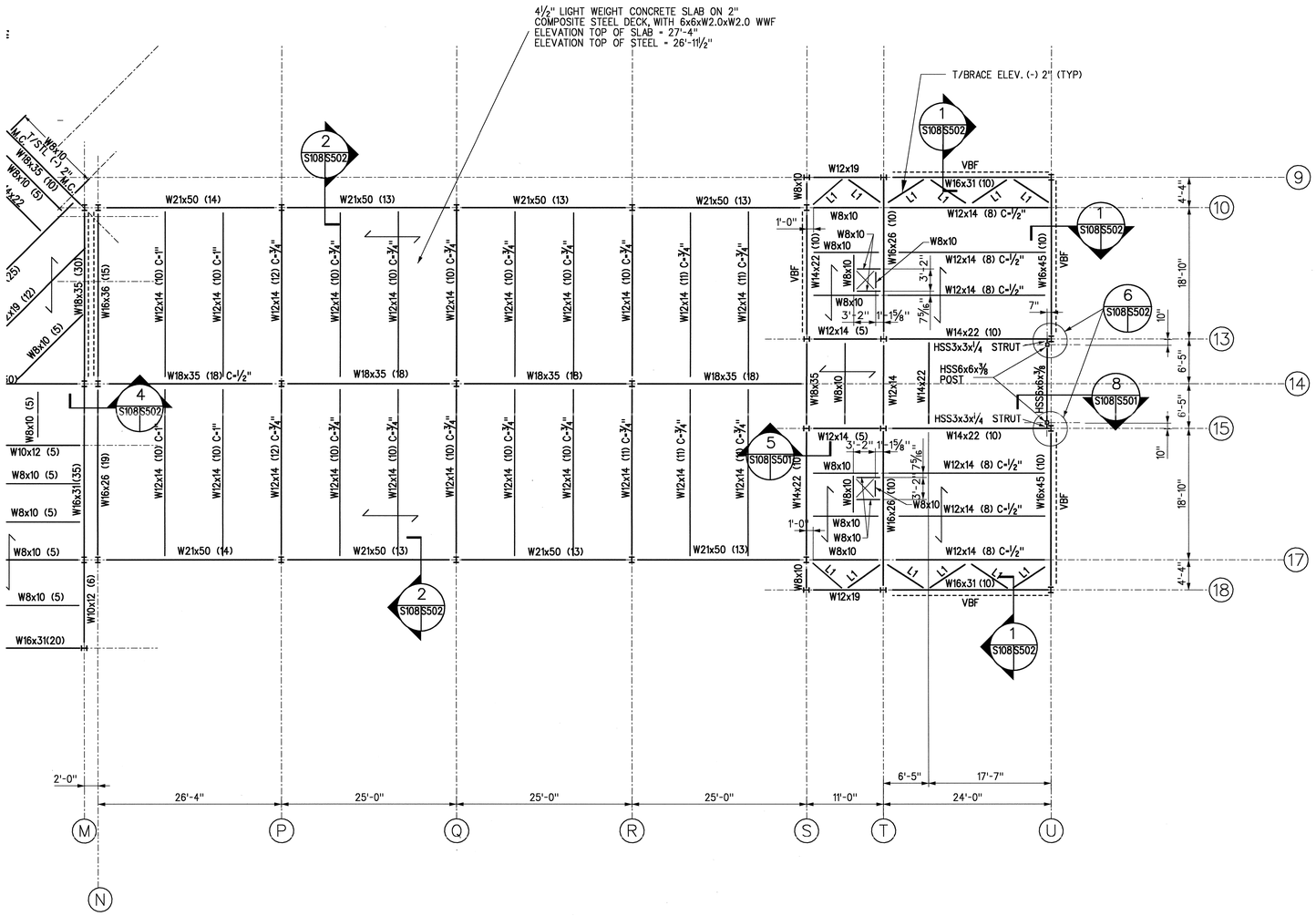


1 S108 S108 PARTIAL 3RD FLOOR FRAMING PLAN AREA B & C
SCALE = ⅛" = 1'-0"

## NOTES

1. DASHED LINE INDICATES LOCATION OF BRACED BAY. SEE DRAWING S201 & S202.
2. INDICATES SPAN OF DECK AND SLAB
3. BEAMS ARE LOCATED AT EQUAL SPACING BETWEEN COLUMN GRID LINES, U.N.O.
4. CONTRACTOR SHALL PROVIDE CELL CLOSURES AND POUR STOPS AS REQUIRED FOR CONCRETE DECK PLACEMENT.
5. NUMBER IN PARENTHESES AFTER BEAM MARK IS NUMBER OF FIELD APPLIED HEADED STUDS
6. SEE DWG. S-501 FOR COLUMN & BASE PLATE SCHEDULES.
7. C-¾" DENOTES AMOUNT OF CAMBER REQUIRED FROM FABRICATOR
8. SEE CIVIL DRAWINGS FOR BUILDING ORIENTATION.
9. L1= (2)-L4x4x½

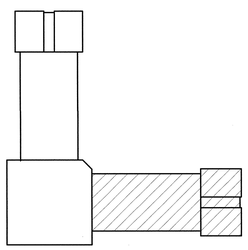

KEY PLAN

8 6 4 2 0 8 16FT
SCALE:⅛"=1'-0"

US ARMY CORPS OF ENGINEERS
SAVANNAH DISTRICT

| DESIGNED BY | CHECKED BY | SIZE F |
|---|---|---|
| CATEGORY CODE 721-81-06 | | |
| CONTRACT NO: DACA21-02-C-0046 | | |
| DATE: 23 APRIL 2003 | | |
| PLOT SCALE: | | |

CLARK CONSTRUCTION
CLARK DESIGN/BUILD, LLC

| SYMBOL | DESCRIPTION | DATE | BY |
|---|---|---|---|

BASIC COMBAT TRAINEE BARRACKS COMPLEX I
FORT JACKSON, SOUTH CAROLINA
TRAINEE BARRACKS

PARTIAL 3RD FLOOR FRAMING PLAN AREA B&C

PLATE REFERENCE NUMBER:
S-108
SHEET 62

DESIGN FILE: $$FILE NAME$$
$$DATE$$

CONFORMED DRAWINGS 12 /19 /03

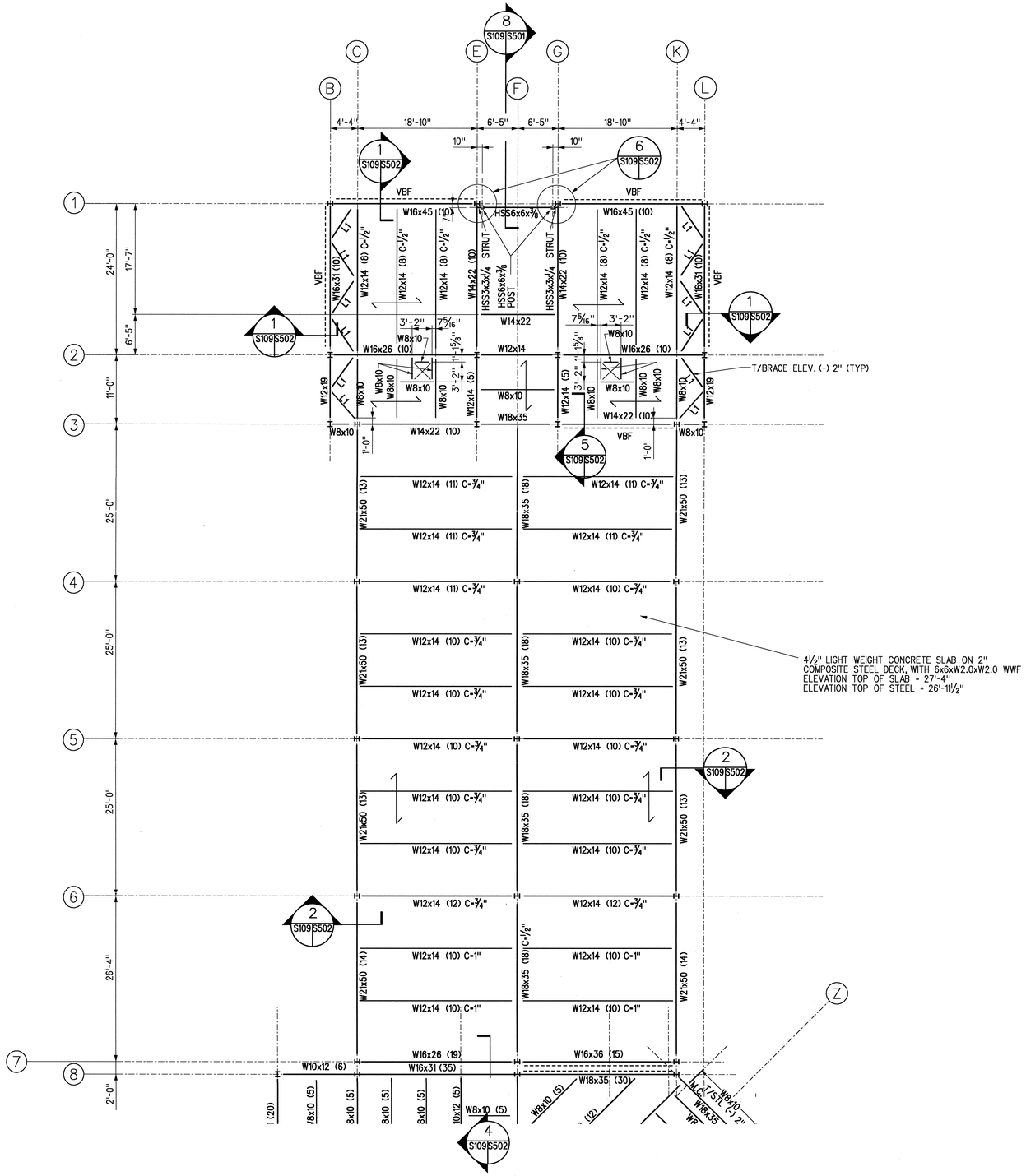


1 S109 S109 PARTIAL 3RD FLOOR FRAMING PLAN AREA D & E

SCALE = 1/8" = 1'-0"

## NOTES

1. DASHED LINE INDICATES LOCATION OF BRACED BAY. SEE DRAWING S201 & S202.
2. INDICATES SPAN OF DECK AND SLAB
3. BEAMS ARE LOCATED AT EQUAL SPACING BETWEEN COLUMN GRID LINES, U.N.O.
4. CONTRACTOR SHALL PROVIDE CELL CLOSURES AND POUR STOPS AS REQUIRED FOR CONCRETE DECK PLACEMENT.
5. NUMBER IN PARENTHESES AFTER BEAM MARK IS NUMBER OF FIELD APPLIED HEADED STUDS
6. SEE DWG. S-501 FOR COLUMN & BASE PLATE SCHEDULES.
7. C-3/4" DENOTES AMOUNT OF CAMBER REQUIRED FROM FABRICATOR
8. SEE CIVIL DRAWINGS FOR BUILDING ORIENTATION.
9. L1= (2)-L4x4x1/2

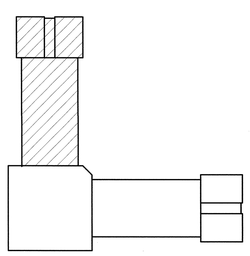

KEY PLAN

8 6 4 2 0 8 16FT

SCALE:1/8"=1'-0"

US ARMY CORPS OF ENGINEERS
SAVANNAH DISTRICT

| DESIGNED BY | CHECKED BY | SIZE F. |
|---|---|---|
| CATEGORY CODE 721-81-06 | | |
| CONTRACT NO: DACA21-02-C-0046 | | |
| DATE:23 APRIL 2003 | | |
| PLOT SCALE: 1 | | |

CLARK CONSTRUCTION

CLARK DESIGN/BUILD, LLC

| SYMBOL | DESCRIPTION | DATE | BY |
|---|---|---|---|

BASIC COMBAT TRAINEE BARRACKS COMPLEX I
FORT JACKSON, SOUTH CAROLINA
TRAINEE BARRACKS

PARTIAL 3RD FLOOR
FRAMING PLAN AREA D & E

PLATE REFERENCE NUMBER:
S-109

SHEET 63

DESIGN FILE: $$FILE NAME$$
$$DATE$$

CONFORMED DRAWINGS 12 /19 /03

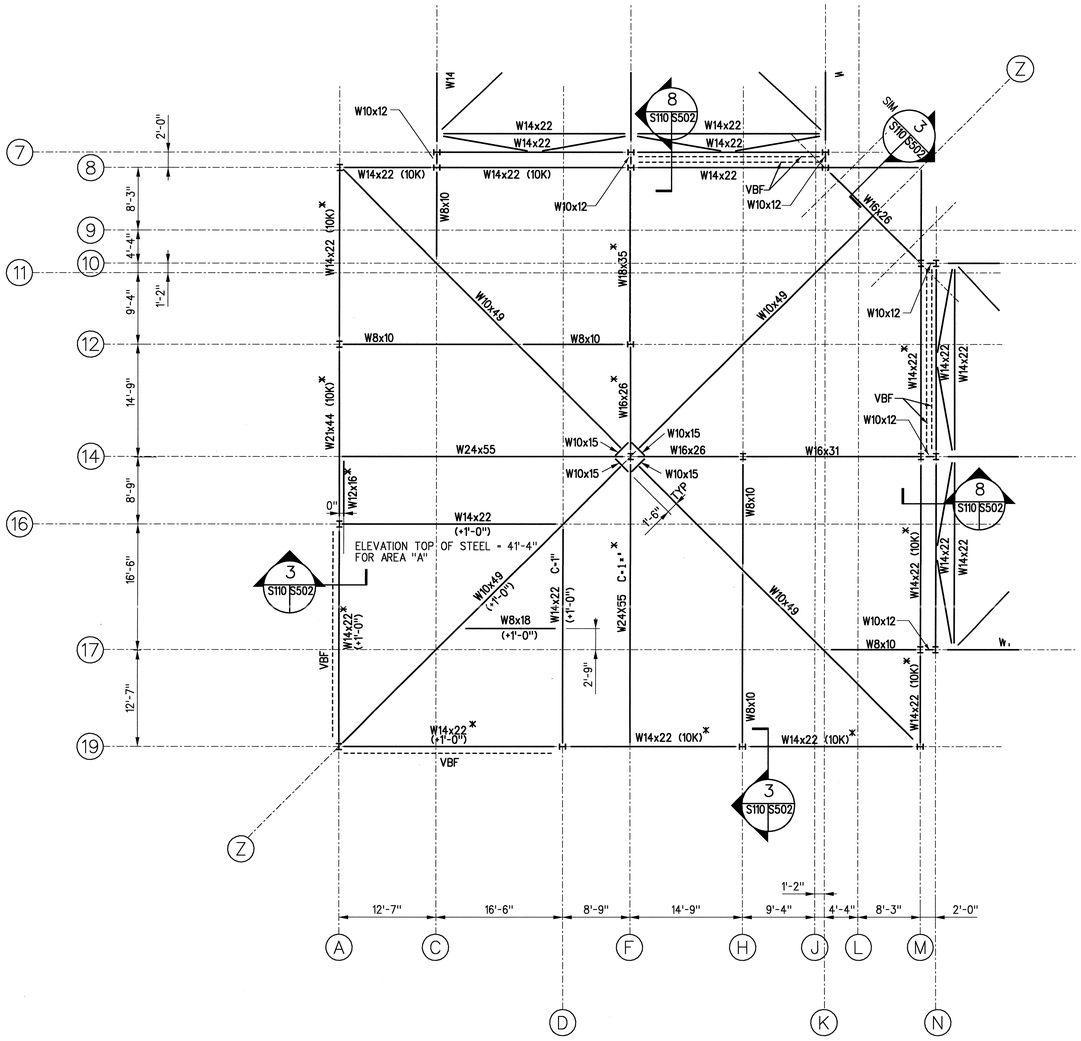


* - DENOTES MEMBER DESIGNED TO SUPPORT LIGHT GAGE METAL TRUSSES.

1 S110 S110 PARTIAL ATTIC FRAMING PLAN AREA A

SCALE - 1/8" - 1'-0"

NOTES

1. DASHED LINE INDICATES LOCATION OF BRACED BAY. SEE DRAWING S201 & S202.
2. CONTRACTOR SHALL PROVIDE CELL CLOSURES AND POUR STOPS AS REQUIRED FOR CONCRETE DECK PLACEMENT.
3. NUMBER IN PARENTHESES AFTER BEAM MARK IS NUMBER OF FIELD APPLIED HEADED STUDS
4. SEE DWG. S-501 FOR COLUMN & BASE PLATE SCHEDULES.

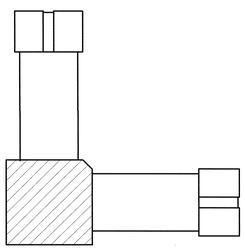

KEY PLAN

8 6 4 2 0 8 16FT

SCALE: 1/8"=1'-0"

US ARMY CORPS OF ENGINEERS SAVANNAH DISTRICT

| DESIGNED BY | CHECKED BY | SIZE F |
|---|---|---|
| CATEGORY CODE 721-81-06 | | |
| CONTRACT NO: DACA21-02-C-0046 | | |
| DATE: 23 APRIL 2003 | PLOT SCALE: 1 | |

CLARK CONSTRUCTION

CLARK DESIGN/BUILD, LLC

| SYMBOL | DESCRIPTION | DATE | BY |
|---|---|---|---|

BASIC COMBAT TRAINEE BARRACKS COMPLEX I
FORT JACKSON, SOUTH CAROLINA
TRAINEE BARRACKS

PARTIAL ATTIC FRAMING PLAN AREA A

PLATE REFERENCE NUMBER: S-110

SHEET 64

DESIGN FILE: $$FILE NAME$$
$$DATE$$

CONFORMED DRAWINGS 12 /19 /03

NOTES

1. DASHED LINE INDICATES LOCATION OF BRACED BAY. SEE DRAWING S201 & S202.
2. CONTRACTOR SHALL PROVIDE CELL CLOSURES AND POUR STOPS AS REQUIRED FOR CONCRETE DECK PLACEMENT.
3. NUMBER IN PARENTHESES AFTER BEAM MARK IS NUMBER OF FIELD APPLIED HEADED STUDS
4. SEE DWG. S-501 FOR COLUMN & BASE PLATE SCHEDULES.
5. L2= L5x5x5/16

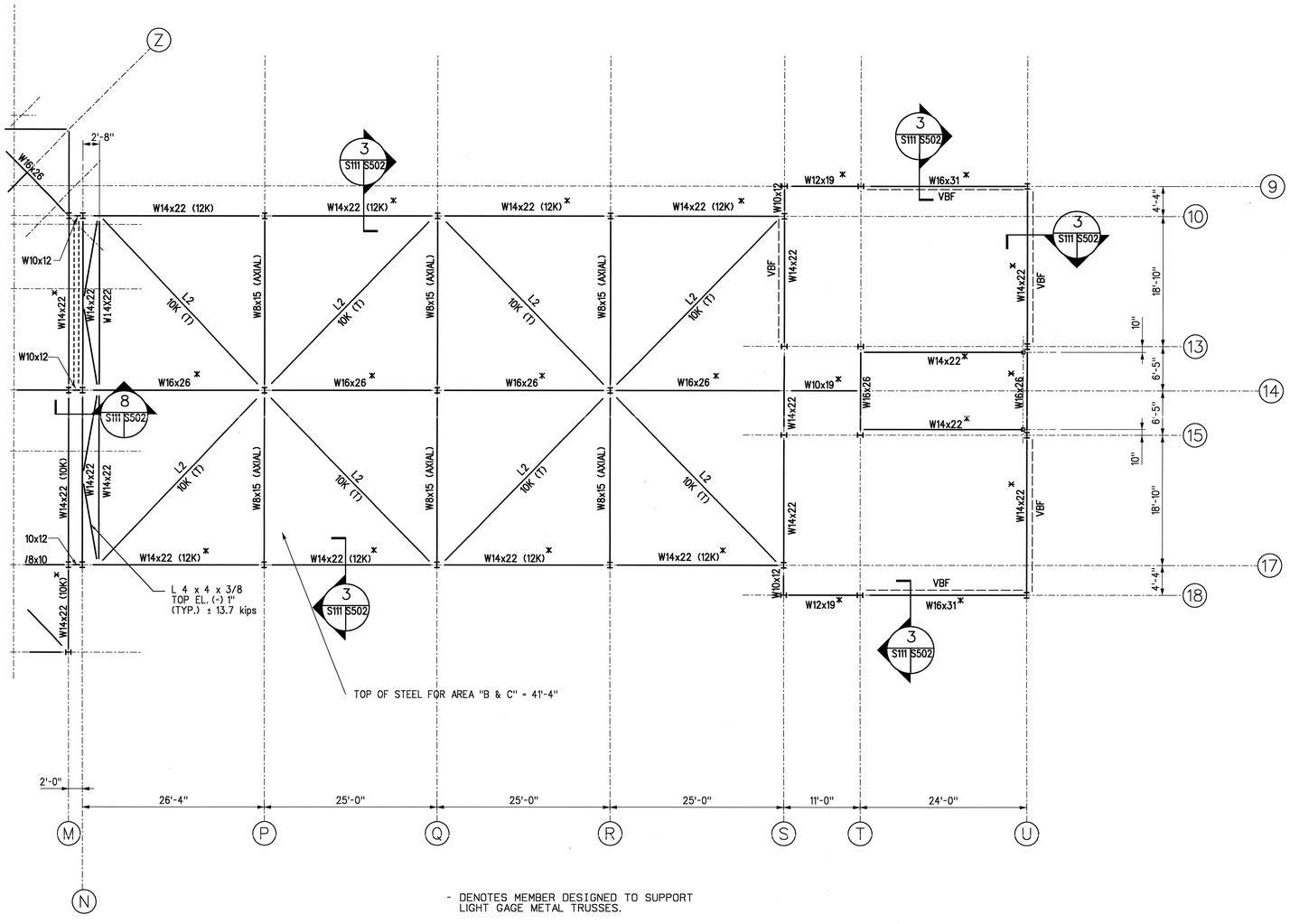


- DENOTES MEMBER DESIGNED TO SUPPORT LIGHT GAGE METAL TRUSSES.

1 S111 S111 PARTIAL ATTIC FRAMING PLAN AREA B & C

SCALE = 1/8" = 1'-0"

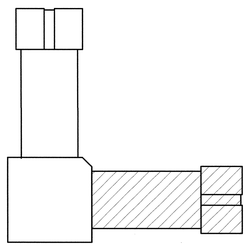

KEY PLAN

8 6 4 2 0 8 16FT

SCALE: 1/8"=1'-0"

US ARMY CORPS OF ENGINEERS
SAVANNAH DISTRICT

| DESIGNED BY | CHECKED BY | SIZE F |
|---|---|---|
| CATEGORY CODE 721-81-06 | | |
| CONTRACT NO: DACA21-02-C-0046 | | |
| DATE: 23 APRIL 2003 | | |
| PLOT SCALE: | | |

CLARK CONSTRUCTION

CLARK DESIGN/BUILD, LLC

| SYMBOL | DESCRIPTION | DATE | BY |
|---|---|---|---|

BASIC COMBAT TRAINEE BARRACKS COMPLEX I
FORT JACKSON, SOUTH CAROLINA
TRAINEE BARRACKS

PARTIAL ATTIC FRAMING PLAN AREA B & C

PLATE REFERENCE NUMBER:
S-111

SHEET 65

DESIGN FILE: $$FILE NAME$$
$$DATE$$

CONFORMED DRAWINGS 12 /19 /03

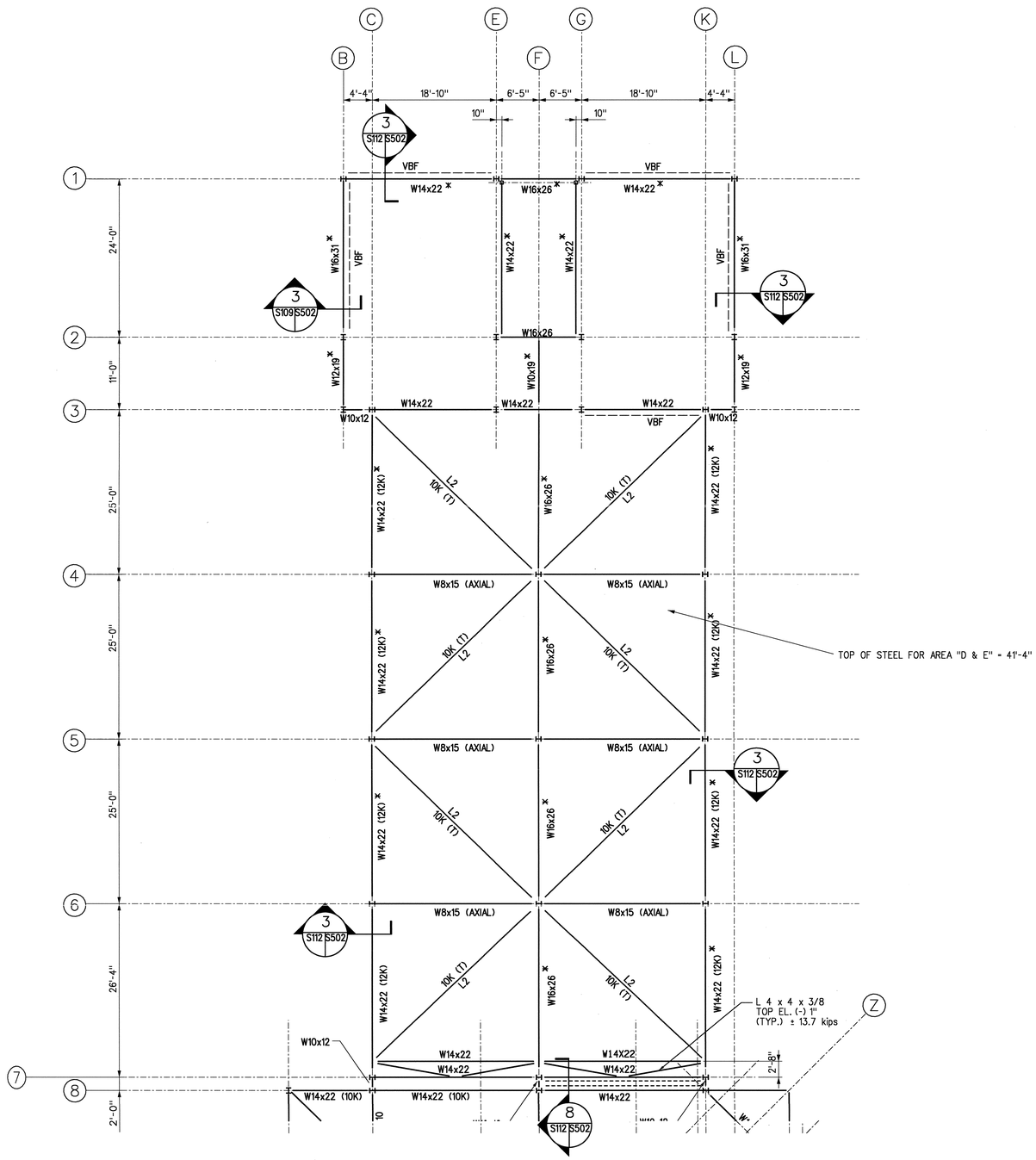


- DENOTES MEMBER DESIGNED TO SUPPORT LIGHT GAGE METAL TRUSSES.

1 S112 S112 PARTIAL ATTIC FRAMING PLAN AREA D & E

SCALE = 1/8" = 1'-0"

NOTES

1. DASHED LINE INDICATES LOCATION OF BRACED BAY. SEE DRAWING S201 & S202
2. CONTRACTOR SHALL PROVIDE CELL CLOSURES AND POUR STOPS AS REQUIRED FOR CONCRETE DECK PLACEMENT.
3. NUMBER IN PARENTHESES AFTER BEAM MARK IS NUMBER OF FIELD APPLIED HEADED STUDS
4. SEE DWG. S-501 FOR COLUMN & BASE PLATE SCHEDULES.
5. L2= L5x5x5/16

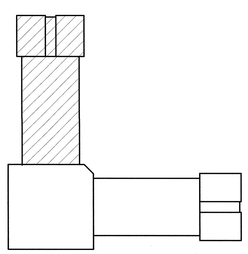

KEY PLAN

8 6 4 2 0 8 16FT

SCALE:1/8"=1'-0"

US ARMY CORPS OF ENGINEERS
SAVANNAH DISTRICT

| DESIGNED BY | CHECKED BY | SIZE F. |
|---|---|---|
| CATEGORY CODE 721-81-06 | | |
| CONTRACT NO: DACA21-02-C-0046 | | |
| DATE: 23 APRIL 2003 | | |
| PLOT SCALE: 1 | | |

CLARK DESIGN/BUILD, LLC

| SYMBOL | DESCRIPTION | DATE | BY |
|---|---|---|---|

BASIC COMBAT TRAINEE BARRACKS COMPLEX I
FORT JACKSON, SOUTH CAROLINA
TRAINEE BARRACKS

PARTIAL ATTIC FRAMING PLAN AREA D & E

PLATE REFERENCE NUMBER:
S-112

SHEET 66

DESIGN FILE: $$FILE NAME$$
$$DATE$$

CONFORMED DRAWINGS 12 /19 /03

NOTES

1. ALL GABLED ROOF FRAMING IS CONSTRUCTED OF LIGHT GAGE COLD FORMED METAL AND SHALL BE ENGINEERED BY THE SUPPLIER.
2. TRUSS SUPPPORT PROVIDED WITH STEEL BEAMS ALONG COLUMN LINES A, D, F, & M. TRUSS SPACING = 4'-0" MAX.

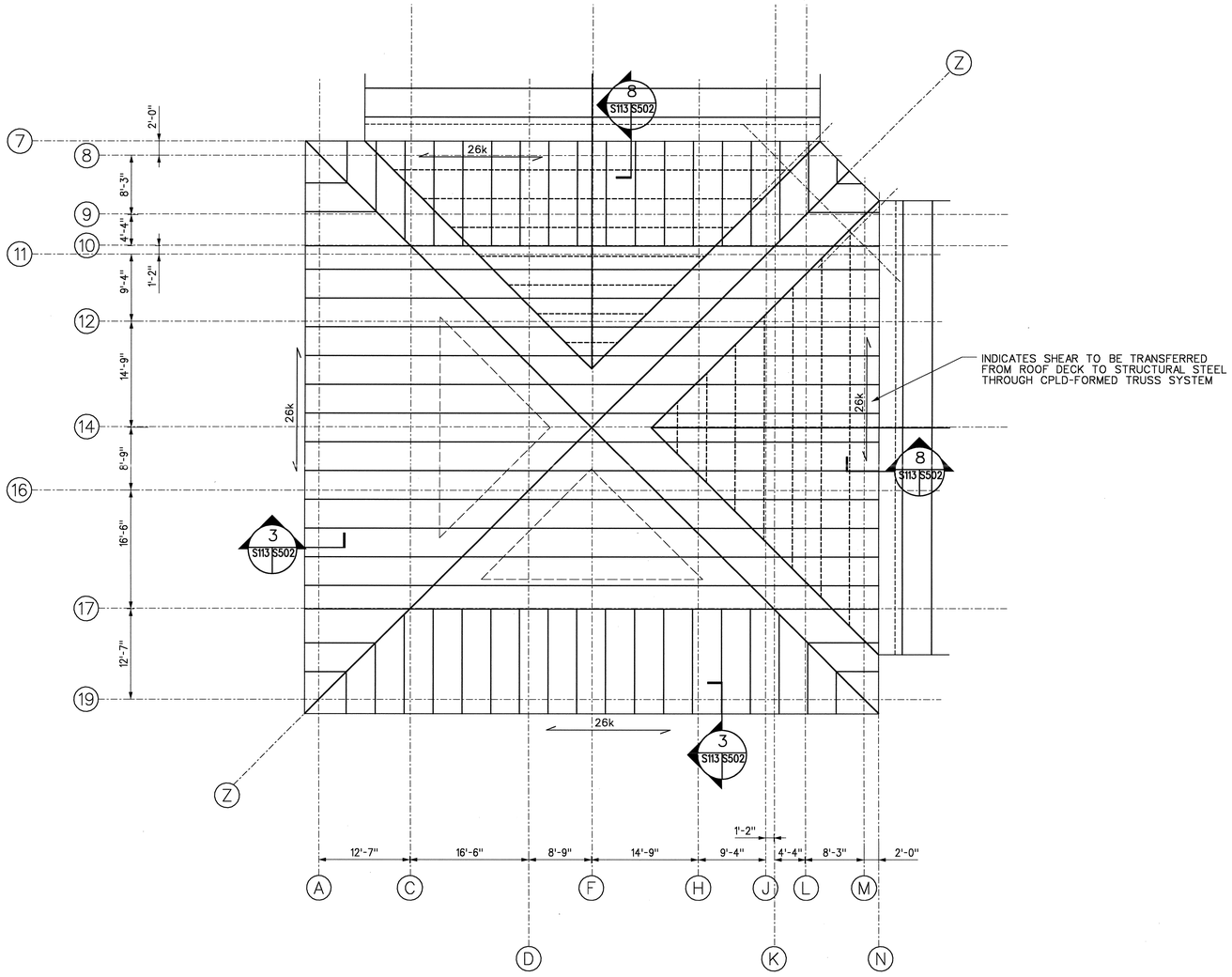


1 S113 S113 PARTIAL ROOF PLAN AREA A
SCALE = 1/8" = 1'-0"

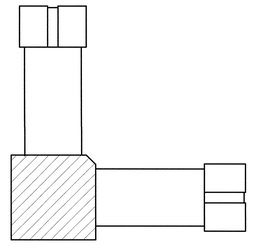

KEY PLAN

8 6 4 2 0 8 16FT
SCALE=1/8"=1'-0"

US ARMY CORPS OF ENGINEERS SAVANNAH DISTRICT

| DESIGNED BY | CHECKED BY | SIZE F. |
|---|---|---|
| CATEGORY CODE 721-81-06 | | |
| CONTRACT NO: DACA21-02-C-0046 | | |
| DATE: 23 APRIL 2003 | PLOT SCALE: 1 | |

CLARK CONSTRUCTION

CLARK DESIGN/BUILD, LLC

| SYMBOL | DESCRIPTION | DATE | BY |
|---|---|---|---|

BASIC COMBAT TRAINEE BARRACKS COMPLEX I
FORT JACKSON, SOUTH CAROLINA
TRAINEE BARRACKS

PARTIAL ROOF FRAMING PLAN AREA A

PLATE REFERENCE NUMBER:
S-113
SHEET 67

DESIGN FILE: $$FILE NAME$$
$$DATE$$

CONFORMED DRAWINGS 12 /19 /03

NOTES

1. ALL GABLED ROOF FRAMING IS CONSTRUCTED OF LIGHT GAGE COLD FORMED METAL.

2. TRUSS SUPPPORT PROVIDED WITH STEEL BEAMS ALONG COLUMN LINES 9, 10, 13, 14, 15, 17, 18, & U. TRUSS SPACING - 4'-0" MAX.

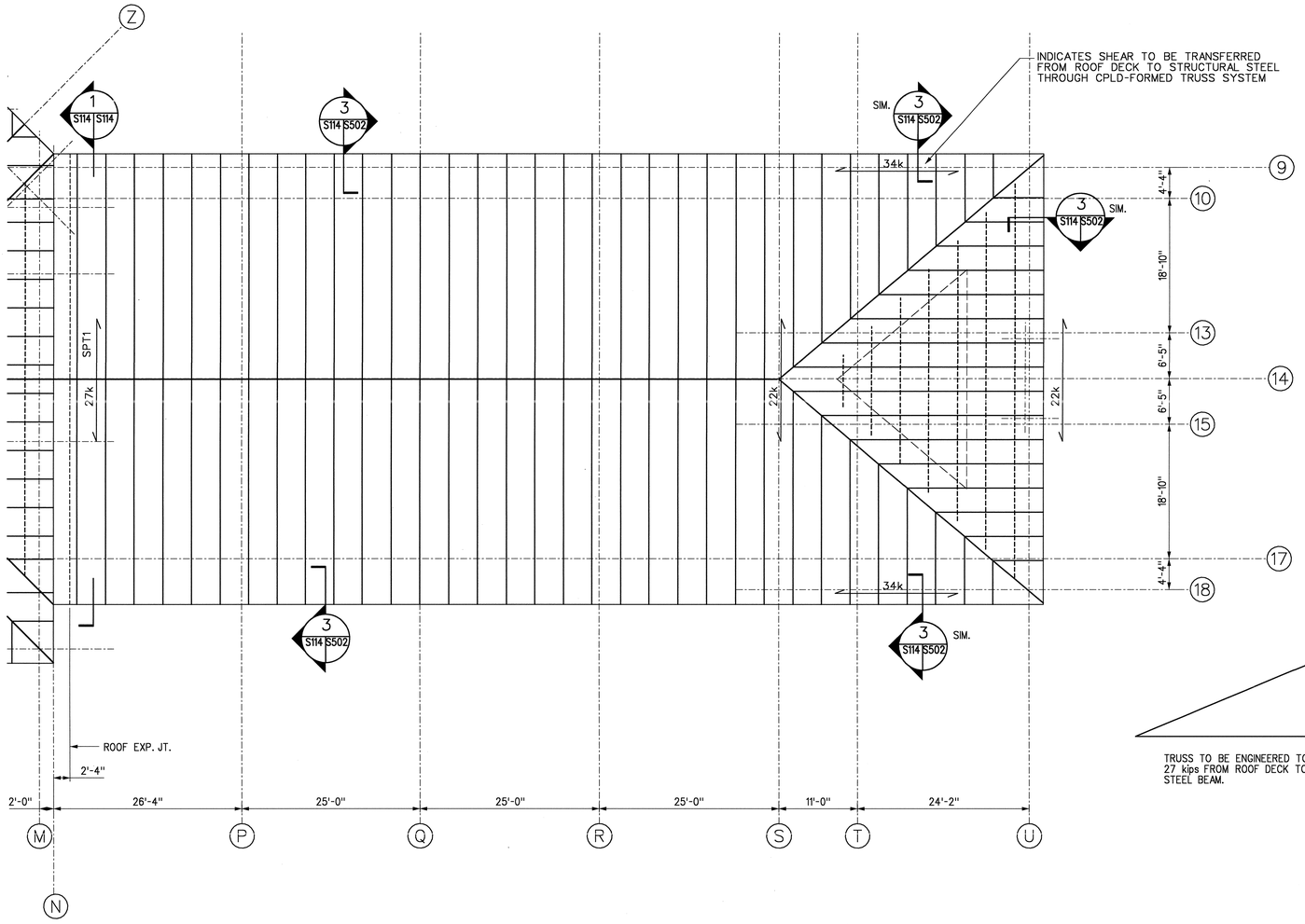


1 S114 S114 PARTIAL ROOF PLAN AREA B & C
SCALE - 1/8" - 1'-0"

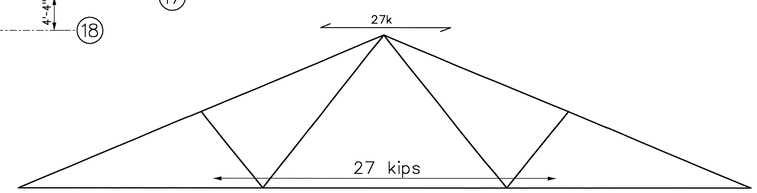


TRUSS TO BE ENGINEERED TO TRANSFER 27 kips FROM ROOF DECK TO STRUCTURAL STEEL BEAM.

SPT1

1 S114 S114 S115 SECTION
SCALE: NONE

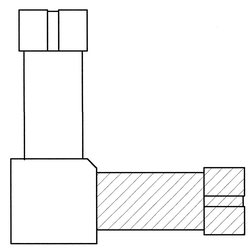

KEY PLAN

8 6 4 2 0 8 16FT
SCALE: 1/8"=1'-0"

US ARMY CORPS OF ENGINEERS SAVANNAH DISTRICT

DESIGNED BY | CHECKED BY | SIZE F
CATEGORY CODE 721-81-06
CONTRACT NO: DACA21-02-C-0046
DATE: 23 APRIL 2003
PLOT SCALE:

CLARK CONSTRUCTION
CLARK DESIGN/BUILD, LLC

| SYMBOL | DESCRIPTION | DATE | BY |
|---|---|---|---|

BASIC COMBAT TRAINEE BARRACKS COMPLEX I
FORT JACKSON, SOUTH CAROLINA
TRAINEE BARRACKS

PARTIAL ROOF FRAMING PLAN AREA B & C

PLATE REFERENCE NUMBER:
S-114
SHEET 68

DESIGN FILE: $$FILE NAME$$
$$DATE$$

CONFORMED DRAWINGS 12 /19 /03