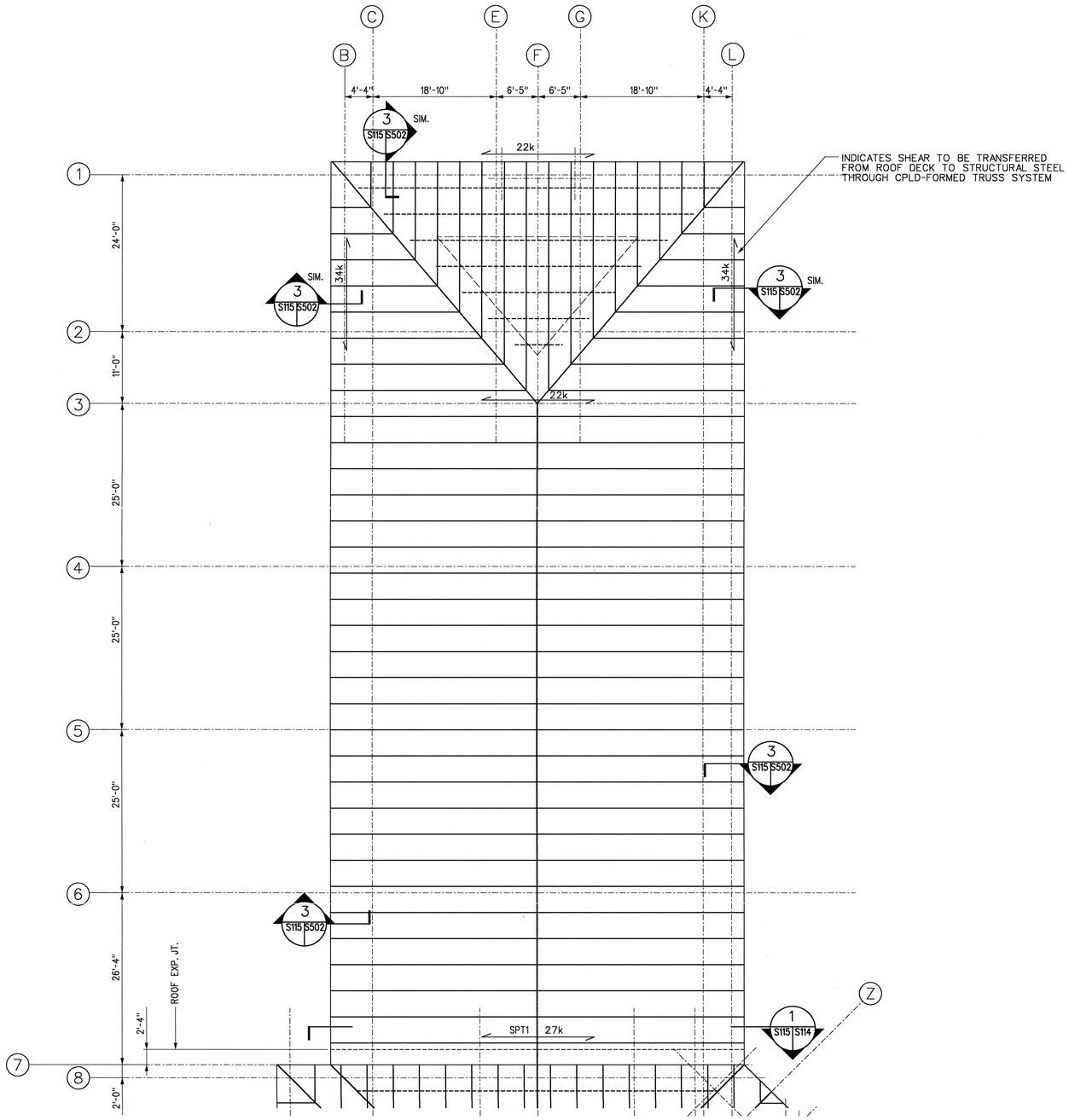

1 S115 S115 PARTIAL ROOF PLAN AREA D & E
SCALE = 1/8" = 1'-0"

NOTES

1. ALL GABLED ROOF FRAMING IS CONSTRUCTED OF LIGHT GAGE COLD FORMED METAL.

2. TRUSS SUPPPORT PROVIDED WITH STEEL BEAMS ALONG COLUMN LINES B, C, E, F, G, K, L, & 1. TRUSS SPACING = 4'-0" MAX.

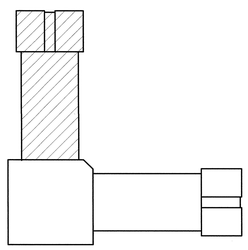

KEY PLAN

8 6 4 2 0 8 16FT
SCALE: 1/8"=1'-0"

US ARMY CORPS OF ENGINEERS
SAVANNAH DISTRICT

DESIGNED BY	CHECKED BY	SIZE F
CATEGORY CODE 721-81-06		
CONTRACT NO: DACA21-02-C-0046		
DATE: 23 APRIL 2003		
PLOT SCALE: 1		

CLARK CONSTRUCTION
CLARK DESIGN/BUILD, LLC

SYMBOL	DESCRIPTION	DATE	BY

BASIC COMBAT TRAINEE BARRACKS COMPLEX I
FORT JACKSON, SOUTH CAROLINA
TRAINEE BARRACKS

PARTIAL ROOF FRAMING PLAN AREA D & E

PLATE REFERENCE NUMBER:
S-115
SHEET 69

DESIGN FILE: $$FILE NAME$$
$$DATE$$

CONFORMED DRAWINGS 12 /19 /03

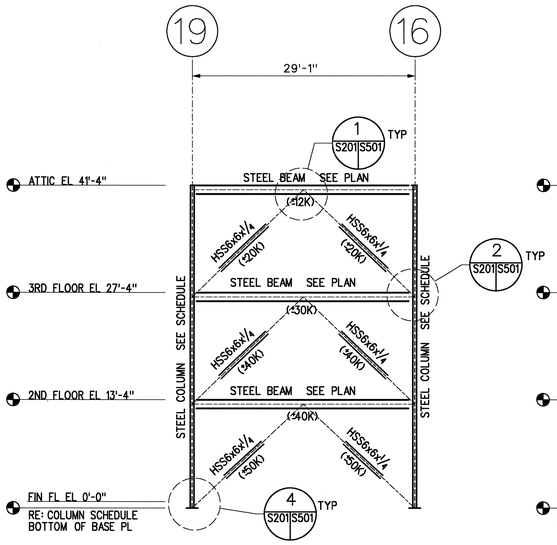

A FRAMING ELEV. COL LINE A
S104 S201 S107 S110
SCALE = 1/8" = 1'-0"

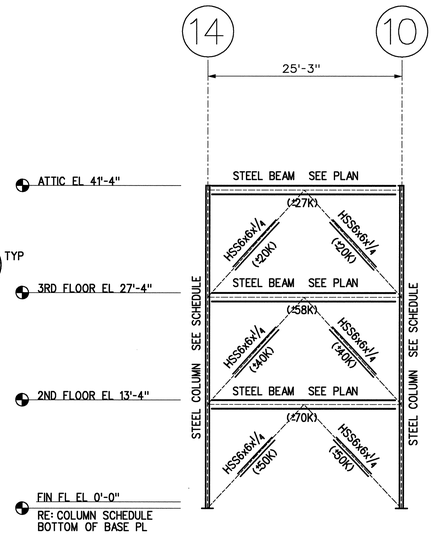

B FRAMING ELEV, COL LINE M
S104 S201 S107 S110
SCALE = 1/8" = 1'-0"

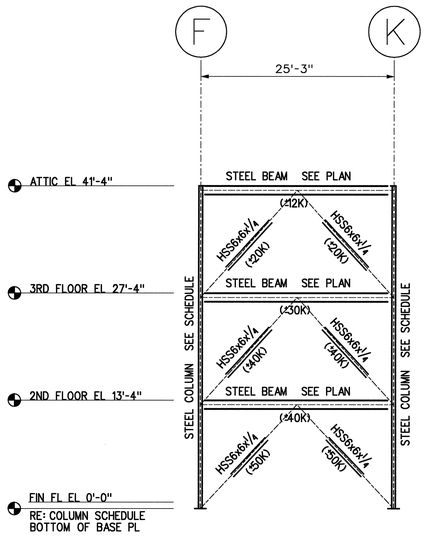

C FRAMING ELEV, COL LINE 8
S104 S201 S107 S110
SCALE = 1/8" = 1'-0"

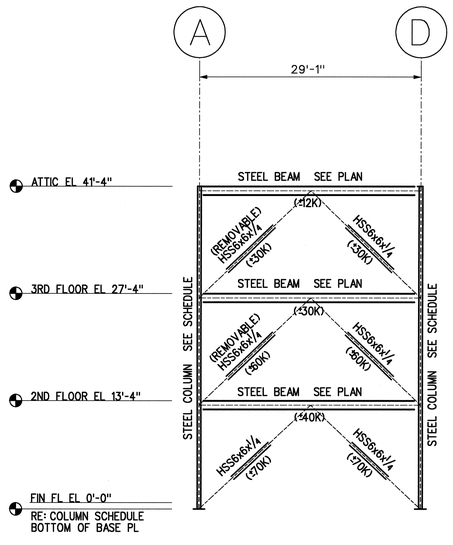

D FRAMING ELEV, COL LINE 19
S104 S201 S107 S110
SCALE = 1/8" = 1'-0"

NOTES:

1. ALL LOADS PROVIDED ON FRAMING ELEVATIONS ARE UNFACTORED LOADS. APPROPRIATE LOAD FACTORS SHOULD BE APPLIED FOR CONNECTION DESIGN USING LRFD.
2. ± DENOTES LOADS THAT ARE TENSION AND COMPRESSION LOADS.
3. CONNECTIONS SHALL BE DESIGNED FOR THE WORST CASE COMBINATION OF TENSION AND COMPRESSION.

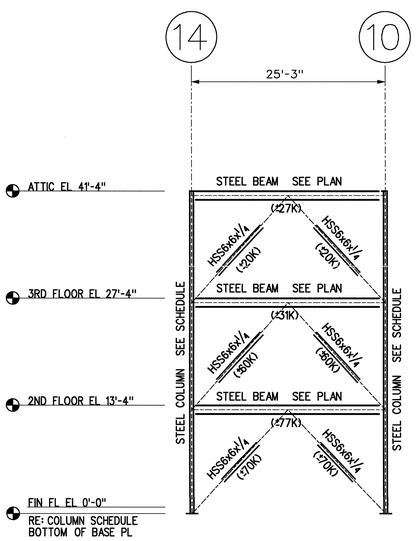

E FRAMING ELEV, COL LINE N
S104 S201 S107 S110
SCALE = 1/8" = 1'-0"

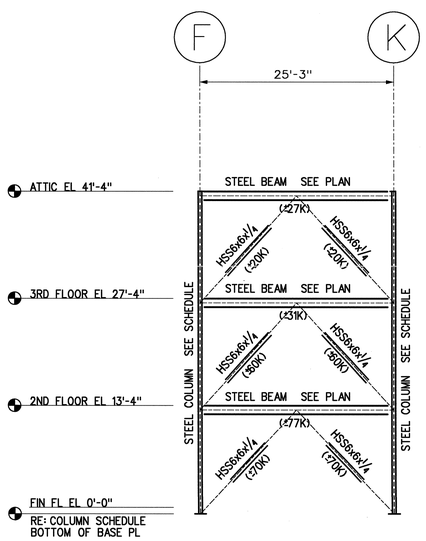

F FRAMING ELEV, COL LINE 7
S104 S201 S107 S110
SCALE = 1/8" = 1'-0"

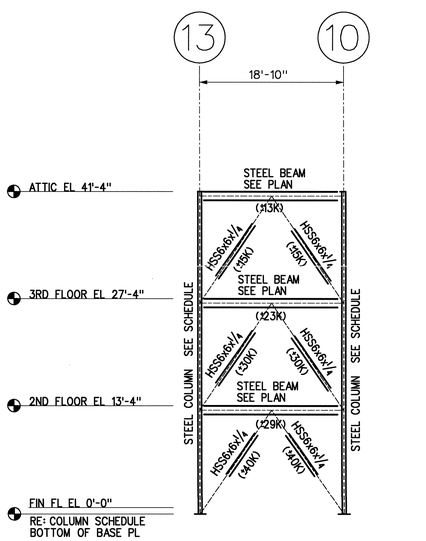

G FRAMING ELEV, COL LINE S
S105 S201 S108 S111
SCALE = 1/8" = 1'-0"

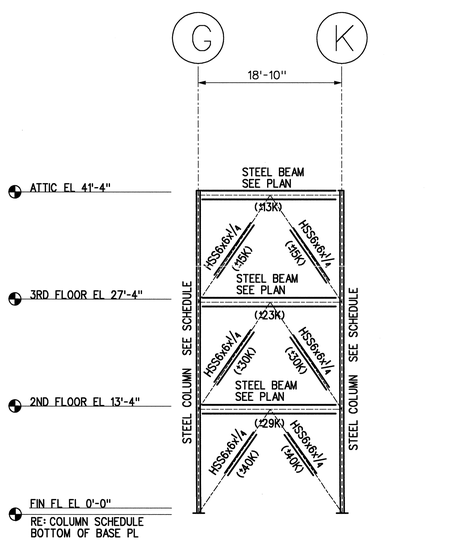

H FRAMING ELEV, COL LINE 3
S106 S201 S109 S112
SCALE = 1/8" = 1'-0"

8 6 4 2 0 8 16FT
SCALE: 1/8"=1'-0"

US ARMY CORPS OF ENGINEERS
SAVANNAH DISTRICT

DESIGNED BY	CHECKED BY	SIZE F.
CATEGORY CODE 721-81-06		
CONTRACT NO: DACA21-02-C-0046		
DATE: 23 APRIL 2003		
PLOT SCALE:		

CLARK CONSTRUCTION
CLARK DESIGN/BUILD, LLC

SYMBOL	DESCRIPTION	DATE	BY

BASIC COMBAT TRAINEE BARRACKS COMPLEX I
FORT JACKSON, SOUTH CAROLINA
TRAINEE BARRACKS

FRAMING ELEVATIONS AND BRACING

PLATE REFERENCE NUMBER:
S-201
SHEET 70

DESIGN FILE: $$FILE NAME$$
$$DATE$$

CONFORMED DRAWINGS 12 /19 /03

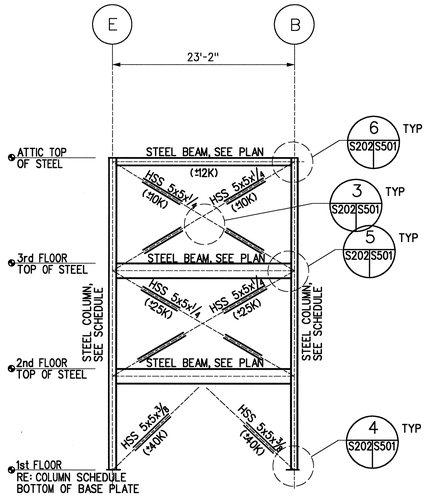

A FRAMING ELEV. COL LINE 1
S106 S202 S109 S112
SCALE - 1/8" - 1'-0"

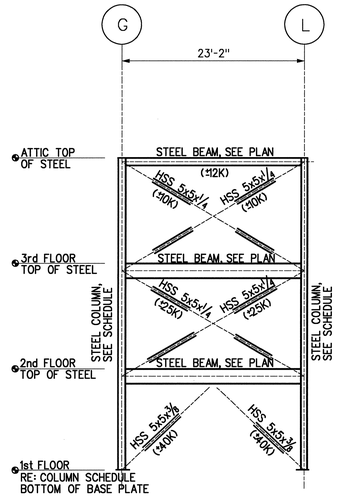

B FRAMING ELEV. COL LINE 1
S106 S202 S109 S112
SCALE - 1/8" - 1'-0"

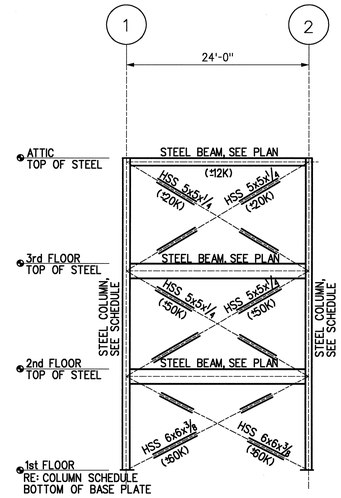

C FRAMING ELEV, COL LINE B
S106 S202 S109 S112
SCALE - 1/8" - 1'-0"

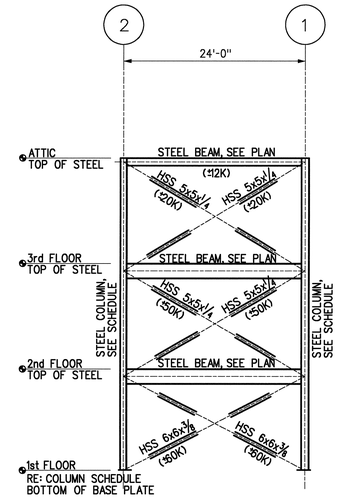

D FRAMING ELEV, COL LINE L
S106 S202 S109 S112
SCALE - 1/8" - 1'-0"

NOTES:

1. ALL LOADS PROVIDED ON FRAMING ELEVATIONS ARE UNFACTORED LOADS. APPROPRIATE LOAD FACTORS SHOULD BE APPLIED FOR CONNECTION DESIGN USING LRFD.
2. ± DENOTES LOADS THAT ARE TENSION AND COMPRESSION LOADS.
3. CONNECTIONS SHALL BE DESIGNED FOR THE WORST CASE COMBINATION OF TENSION AND COMPRESSION.

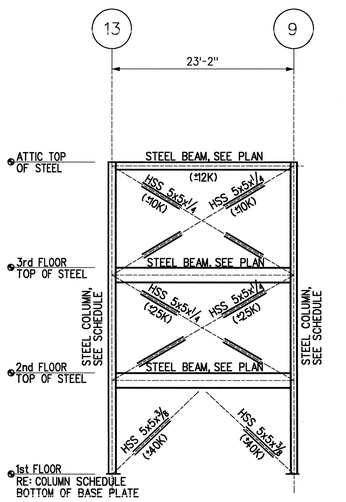

E FRAMING ELEV, COL LINE U
S105 S202 S108 S111
SCALE - 1/8" - 1'-0"

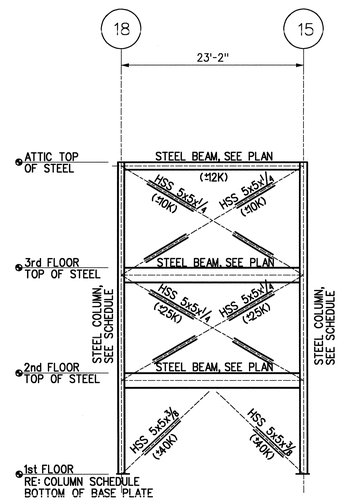

F FRAMING ELEV, COL LINE U
S105 S202 S108 S111
SCALE - 1/8" - 1'-0"

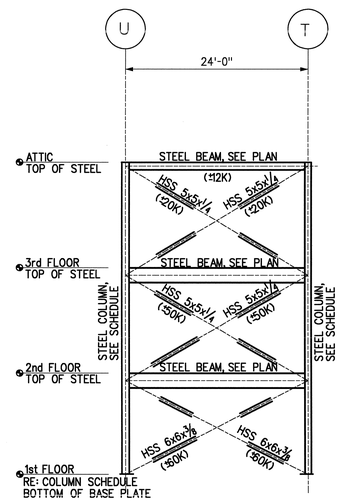

G FRAMING ELEV, COL LINE 9
S105 S202 S108 S111
SCALE - 1/8" - 1'-0"

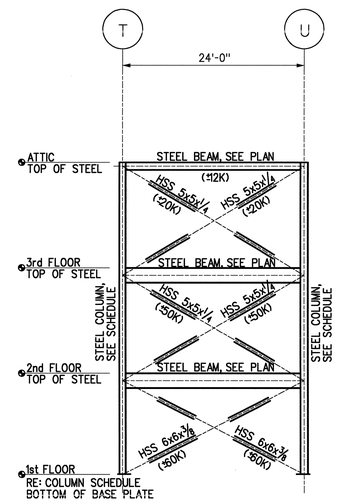

H FRAMING ELEV, COL LINE 18
S105 S202 S108 S111
SCALE - 1/8" - 1'-0"

8 6 4 2 0 8 16FT
SCALE:1/8"=1'-0"

US ARMY CORPS OF ENGINEERS
SAVANNAH DISTRICT

DESIGNED BY | CHECKED BY | SIZE F
CATEGORY CODE 721-81-06
CONTRACT NO: DACA21-02-C-0046
DATE: 23 APRIL 2003
PLOT SCALE: 1

CLARK CONSTRUCTION
CLARK DESIGN/BUILD, LLC

SYMBOL	DESCRIPTION	DATE	BY

BASIC COMBAT TRAINEE BARRACKS COMPLEX I
FORT JACKSON, SOUTH CAROLINA
TRAINEE BARRACKS

FRAMING ELEVATIONS AND BRACING

PLATE REFERENCE NUMBER:
S-202
SHEET 71

DESIGN FILE: $$FILE NAME$$
$$DATE$$

CONFORMED DRAWINGS 12 /19 /03

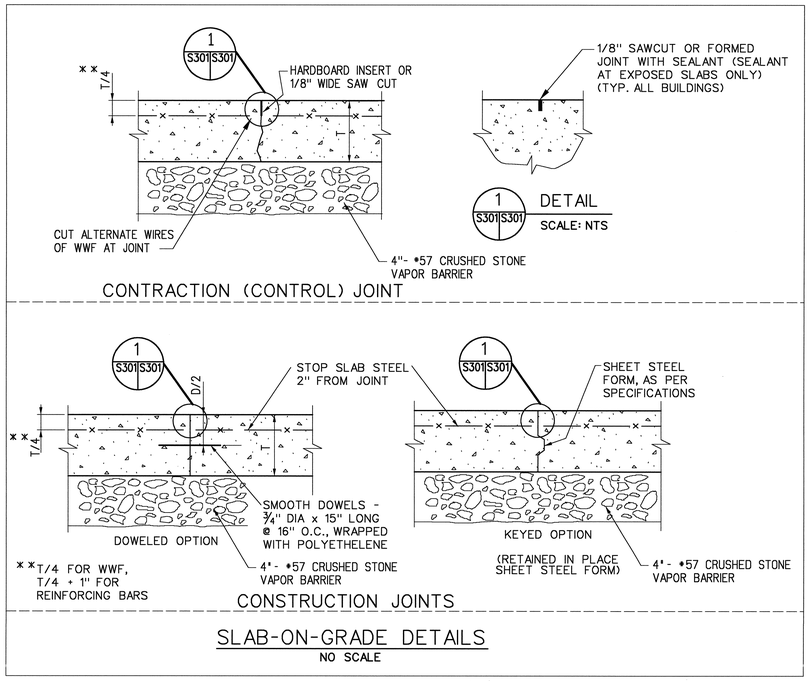

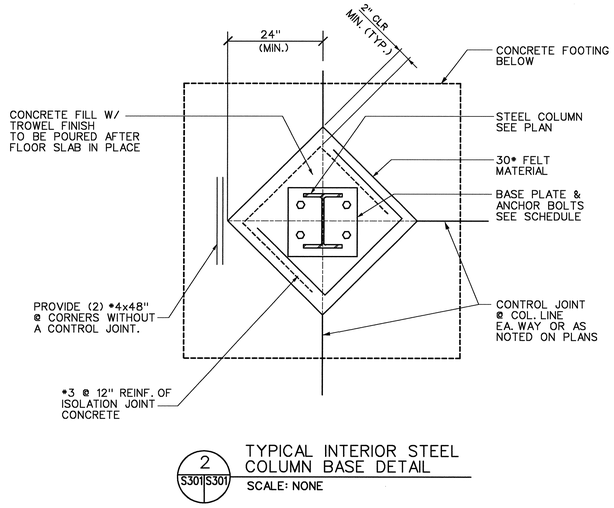

US ARMY CORPS OF ENGINEERS
SAVANNAH DISTRICT

DESIGNED BY	CHECKED BY	SIZE F.
CATEGORY CODE 721-81-06		
CONTRACT NO: DACA21-02-C-0046		
DATE: 23 APRIL 2003	PLOT SCALE: 1	

CLARK CONSTRUCTION
CLARK DESIGN/BUILD, LLC

SYMBOL	DESCRIPTION	DATE	BY

BASIC COMBAT TRAINEE BARRACKS COMPLEX I
FORT JACKSON, SOUTH CAROLINA
TRAINEE BARRACKS

FOUNDATION DETAILS

PLATE REFERENCE NUMBER:
S-301
SHEET 72

DESIGN FILE: $$FILE NAME$$
$$DATE$$

CONFORMED DRAWINGS 12 /19 /03

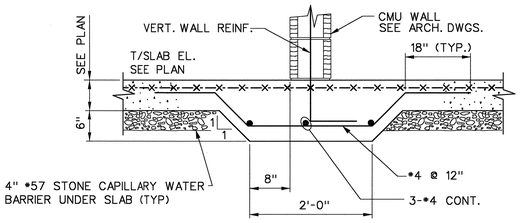

1 SECTION
S101 S302 S102 S103
SCALE = 1" = 1'-0"

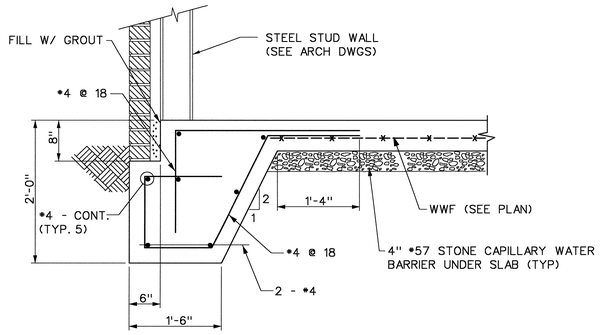

2 SECTION
S101 S302 S102 S103
SCALE = 1" = 1'-0"

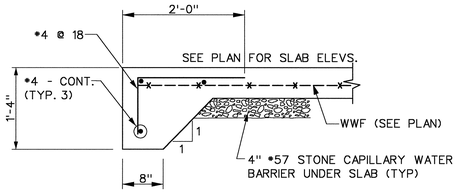

3 SECTION
S101 S302 S102 S103
SCALE = 1" = 1'-0"

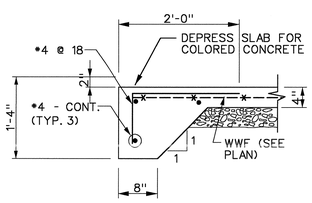

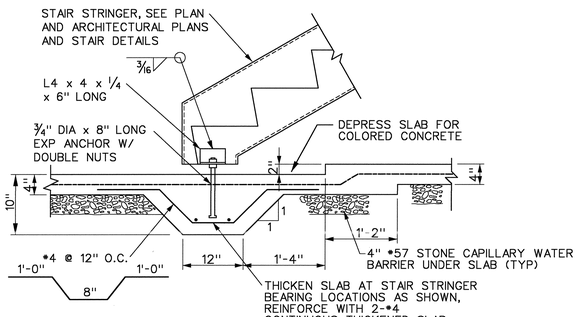

4 SECTION
S101 S302 S102 S103
SCALE = 1" = 1'-0"

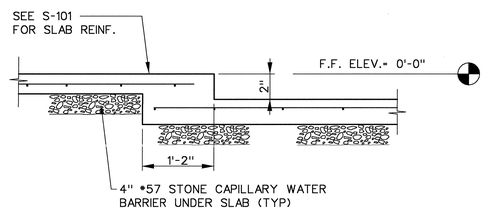

5 SECTION
S101 S302
SCALE = 1" = 1'-0"

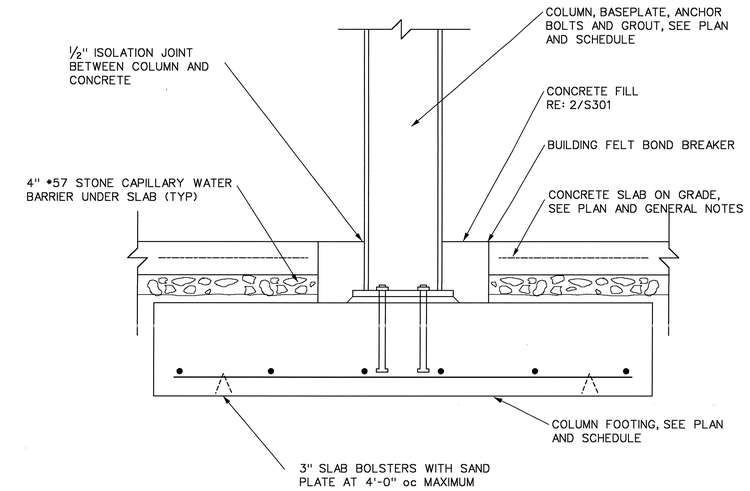

CENTER FOOTING ON STEEL COLUMN ABOVE, UNLESS NOTED OTHERWISE

6 TYPICAL INTERIOR STEEL COLUMN BASE
WITHOUT CONCRETE COLUMN PEDESTAL
S101 S302 S102 S103
SCALE = 1" = 1'-0"

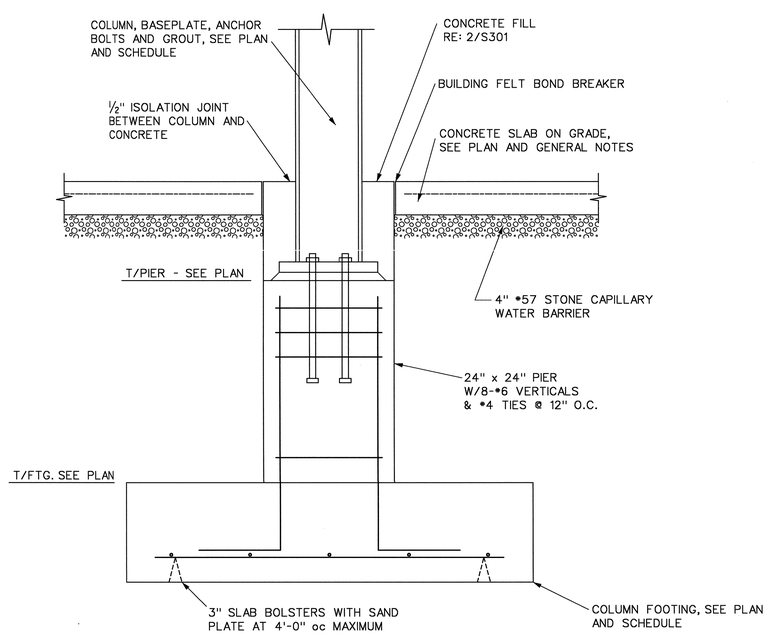

7 TYPICAL STEEL COLUMN BASE
WITH CONCRETE COLUMN PEDESTAL
S101 S302
SCALE = 1" = 1'-0"

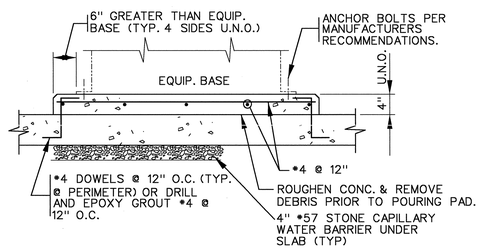

NOTE: THIS SECTION SHALL BE USED FOR EQUIPMENT WITH NO SIGNIFICANT DYNAMIC LOADING. CONTRACTOR SHALL NOTIFY ENGINEER CONCERNING EQUIPMENT THAT MAY IMPART DYNAMIC LOADING TO THE FOUNDATION AND OBTAIN APPROVAL PRIOR TO FABRICATION OR CONSTRUCTION.

8 SECTION
S302 S302
SCALE: 3/4" = 1'-0"

US ARMY CORPS
OF ENGINEERS
SAVANNAH DISTRICT

DESIGNED BY | CHECKED BY | SIZE F.
CATEGORY CODE 721-81-06
CONTRACT NO: DACA21-02-C-0046
DATE: 23 APRIL 2003
PLOT SCALE: :

CLARK CONSTRUCTION
CLARK DESIGN/BUILD, LLC

SYMBOL	DESCRIPTION	DATE	BY

BASIC COMBAT TRAINEE BARRACKS COMPLEX I
FORT JACKSON, SOUTH CAROLINA
TRAINEE BARRACKS

SECTIONS AND DETAILS

PLATE REFERENCE NUMBER:
S-302
SHEET 73

1 0 1 2FT
SCALE: 3/4"=1'-0"
1 0 1 2FT
SCALE: 1 "=1'-0"

DESIGN FILE: $$FILE NAME$$
$$DATE$$

CONFORMED DRAWINGS 12 /19 /03

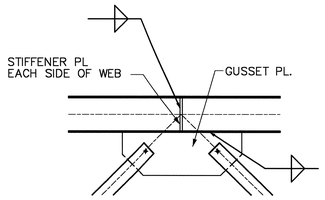

1 S201 S501 DETAIL
SCALE = NONE

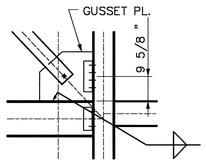

2 S201 S501 DETAIL
SCALE = NONE

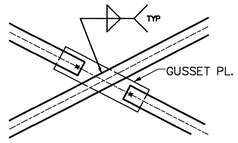

3 S202 S501 DETAIL
SCALE = NONE

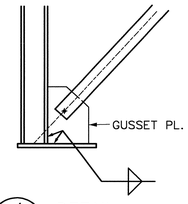

4 S201 S501 S202 DETAIL
SCALE = NONE

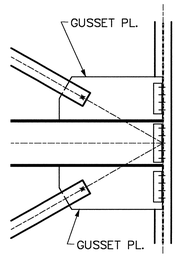

5 S202 S501 DETAIL
SCALE = NONE

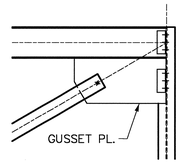

6 S202 S501 DETAIL
SCALE = NONE

NOTE:
FABRICATOR SHALL INDICATE ANY WELDS FPR BRACING THAT ARE LOADED TO LESS THAN 50%.

US ARMY CORPS OF ENGINEERS
SAVANNAH DISTRICT

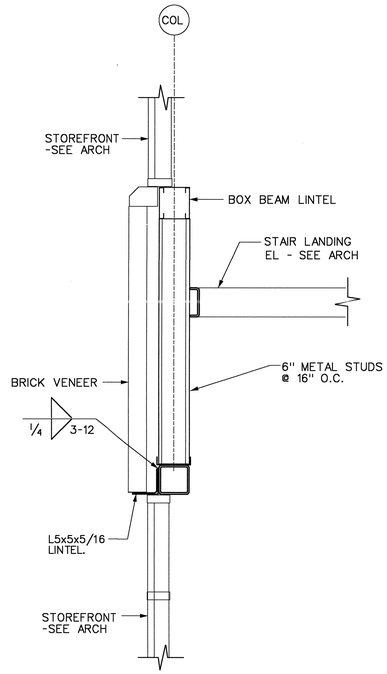

8 S201 S501 SECTION
SCALE = NONE

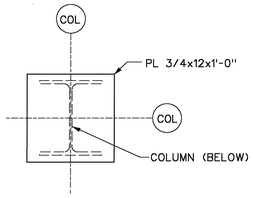

9 S201 S501 DETAIL
SCALE = NONE

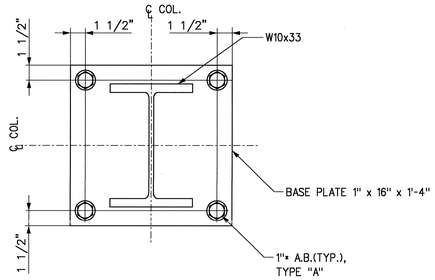

TYPICAL GRAVITY COLUMN BASE PLATE

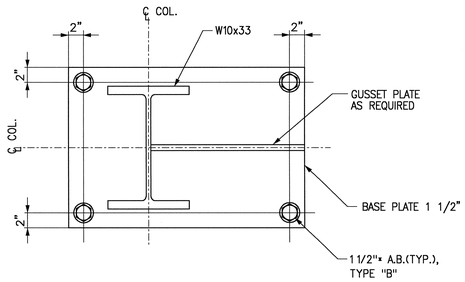

TYPICAL BASE PLATE FOR VERTICALLY BRACED COLUMNS

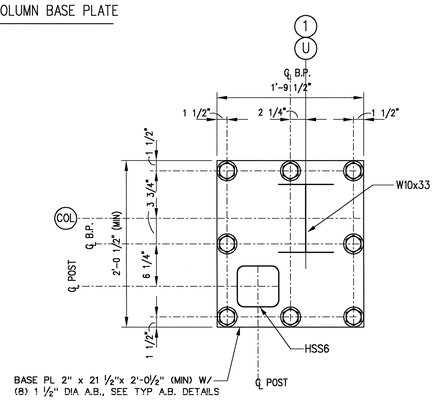

10 S102 S501 S103 DETAIL
SCALE = NONE

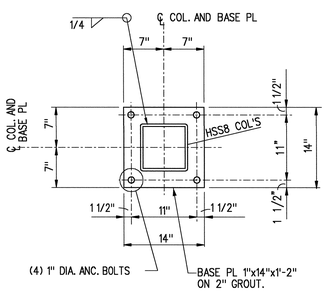

TYP. BASE PLATE FOR HSS8 COLUMNS

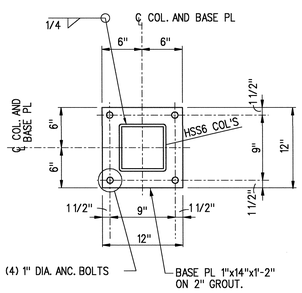

TYP. BASE PLATE FOR HSS6 COLUMNS

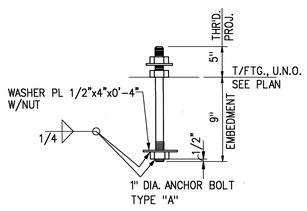

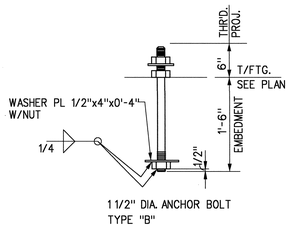

NOTE: BASE PLATES SIT ON 2" GROUT, U.N.O.

TYP. ANCHOR BOLT DETAILS

COLUMN SCHEDULE

ATTIC EL. 41'-4"					1'-0"
3 RD FLOOR EL. 27'-4"			W10x33		
2 ND FLOOR EL. 13'-4"			BEAM		
FINISH FLOOR EL. 0'-0"	W10x33	W10x33	X106 TUBE SEE NOTE BELOW	HSS 8x8x?	W10x33
* BOT/BASE PL.					
COLUMN LOCATION	TYPICAL UNLESS NOTED OTHERWISE	C-16, D-16, C-11, D-11, F-12, H-14, J-16, J-17	F-4, F-5 F-6, P-14, Q-14, R-14	COLUMNS AT MAIN ENTRANCE	A-19, D-19, A16, F-14

* BOT/BASE PL. @ INTERIOR COLUMNS (–) 11"
* BOT/BASE PL. @ EXTERIOR COLUMNS (–) 1'-3"

X106 - 2 HR. TUBE O.D. 8"x8" W/ 1/4" WALL THICKNESS. SUPPLIED BY "FIRE-TROL" OR EQUAL. COLUMN SHALL BE PRIMED IN SHOP.

DESIGNED BY R.S. | CHECKED BY J.K.J. | SIZE F
CATEGORY CODE 721-81-06
CONTRACT NO: DACA21-02-C-0046
DATE: 03 DEC 20003
PLOT SCALE: :

CLARK CONSTRUCTION
CLARK DESIGN/BUILD, LLC

SYMBOL	DESCRIPTION	DATE	BY

BASIC COMBAT TRAINEE BARRACKS COMPLEX I
FORT JACKSON, SOUTH CAROLINA
TRAINEE BARRACKS

STEEL SECTIONS AND DETAILS

PLATE REFERENCE NUMBER:
S-501
SHEET 74

DESIGN FILE: $$FILE NAME$$
$$DATE$$

CONFORMED DRAWINGS 12 /19 /03

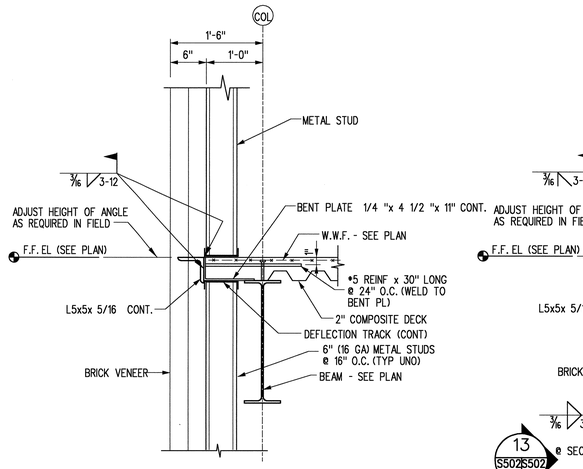

1 SECTION
S105 S502
SCALE: 1" = 1'-0"

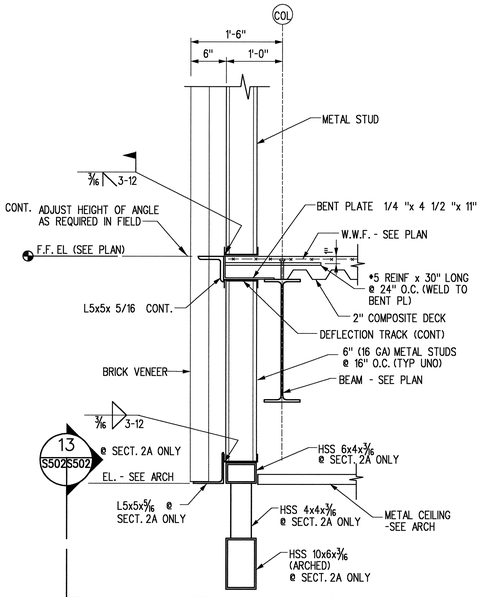

2 SECTION
S105 S502
S106
S108
S109
SCALE: 1" = 1'-0"

2A SECTION
S105 S502
S106
SCALE: 1" = 1'-0"

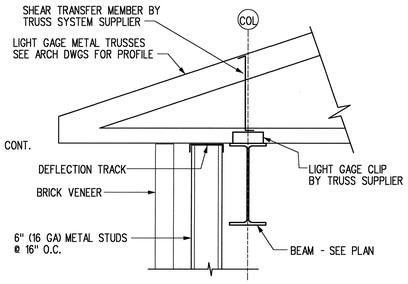

3 SECTION
S110 S502
S111
S112
SCALE: 1" = 1'-0"

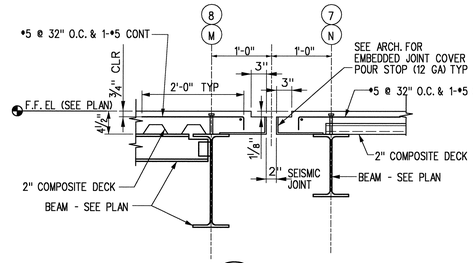

4 SECTION
S104 S105 S502
S106 S107
S108 S109
SCALE: 1" = 1'-0"

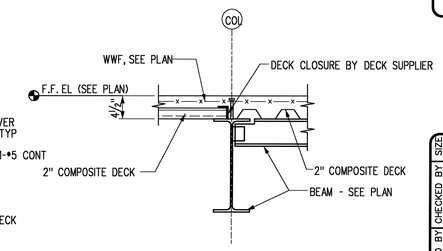

5 SECTION
S104 S105 S502
S106 S107
S108 S109
SCALE: 1" = 1'-0"

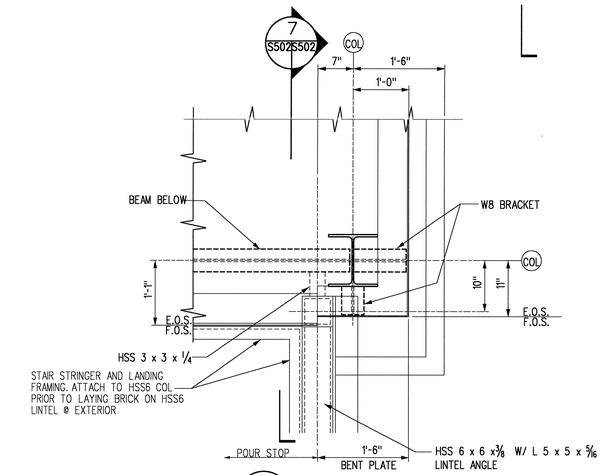

6 DETAIL
S105 S502
S106
S108
S109
SCALE: 1" = 1'-0"

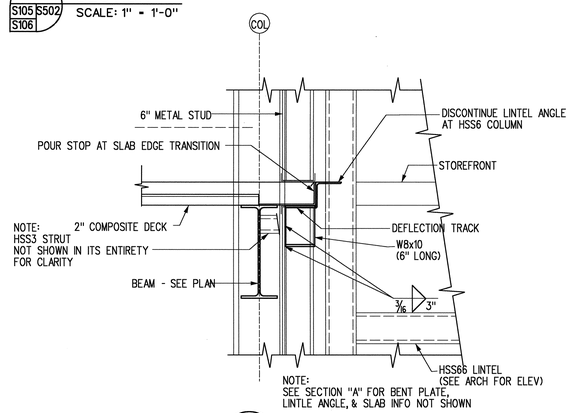

7 SECTION
S502 S502
SCALE: 1" = 1'-0"

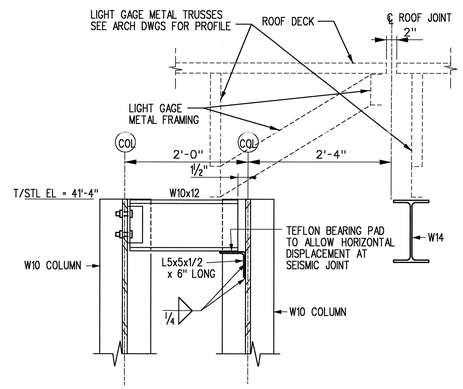

8 SECTION
S110 S502
S111
S112
SCALE: 1" = 1'-0"

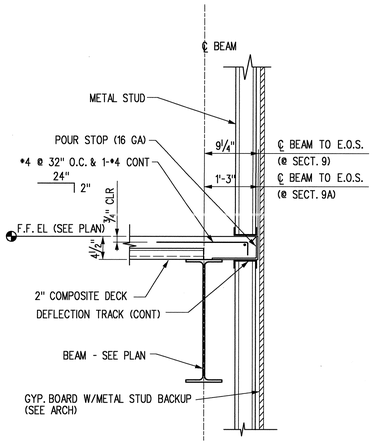

9 SECTION
S104 S502
S107
SCALE: 1" = 1'-0"

9A SECTION
S104 S502
S107
SCALE: 1" = 1'-0"

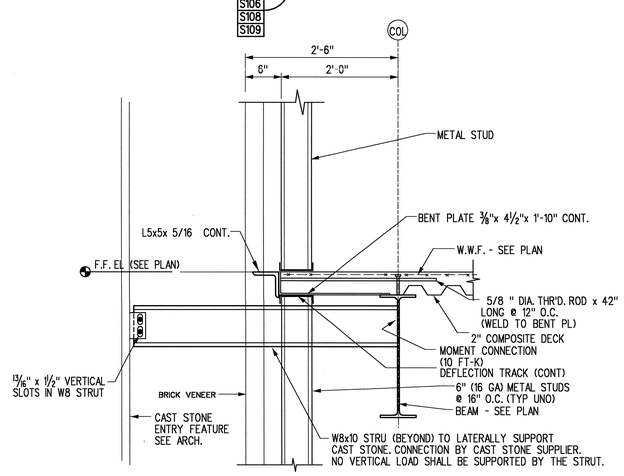

10 SECTION
S104 S502
S107
SCALE: 1" = 1'-0"

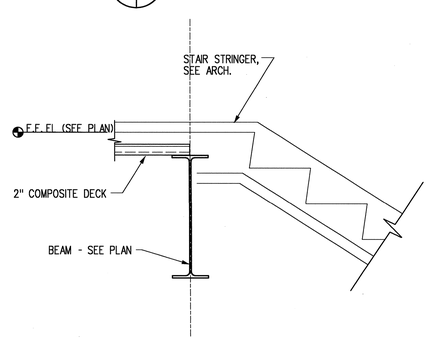

11 SECTION
S104 S502
S107
SCALE: 1" = 1'-0"

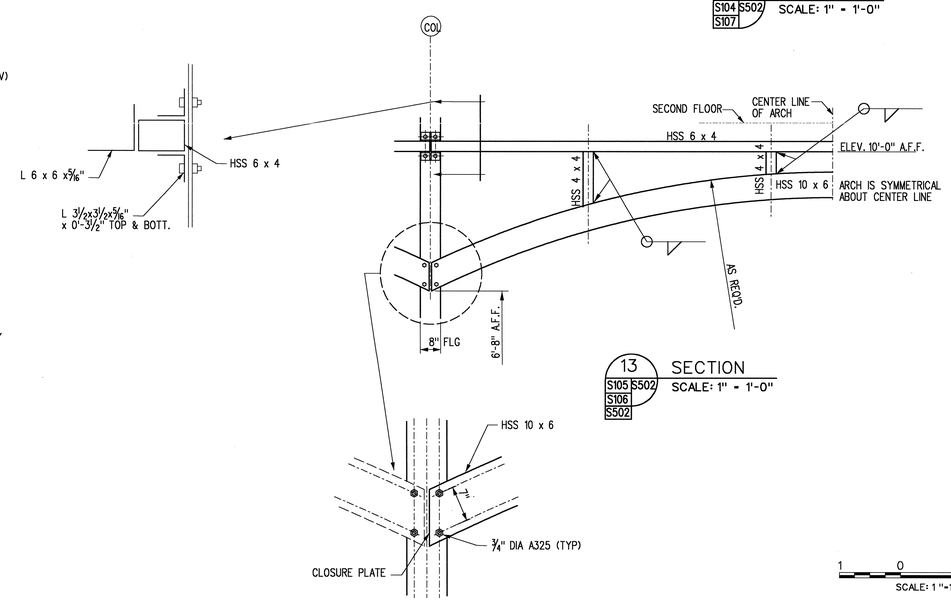

13 SECTION
S105 S502
S106
S502
SCALE: 1" = 1'-0"

1 0 1 2FT
SCALE: 1 "=1'-0"

US ARMY CORPS OF ENGINEERS
SAVANNAH DISTRICT

DESIGNED BY	CHECKED BY	SIZE
R.S.	J.K.J.	F
CATEGORY CODE 721-81-06		
CONTRACT NO: DACA21-02-C-0046		
DATE: 03 APRIL 2003		
PLOT SCALE:		

CLARK CONSTRUCTION
CLARK DESIGN/BUILD, LLC

SYMBOL	DESCRIPTION	DATE	BY

BASIC COMBAT TRAINEE BARRACKS COMPLEX I
FORT JACKSON, SOUTH CAROLINA
TRAINEE BARRACKS

STEEL SECTIONS AND DETAILS

PLATE REFERENCE NUMBER:
S-502
SHEET 75

DESIGN FILE: $$FILE NAME$$
$$DATE$$

CONFORMED DRAWINGS 12 /19 /03

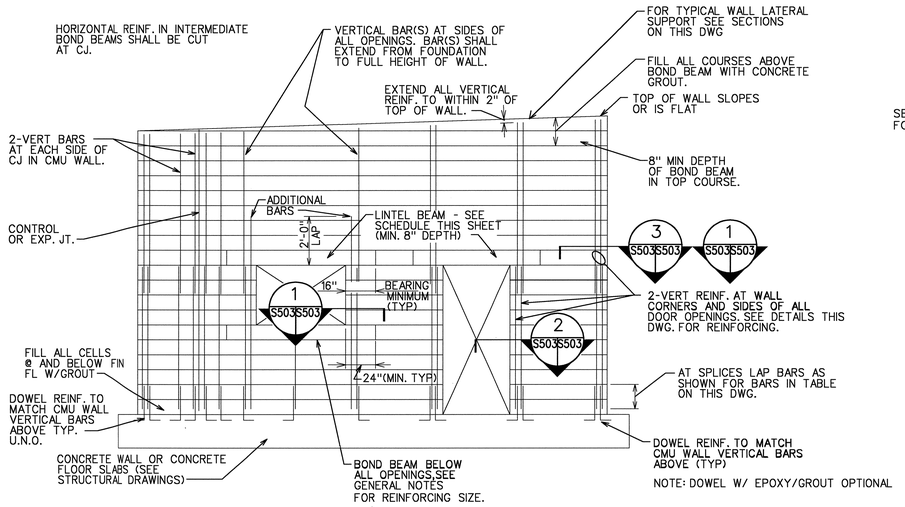

TYPICAL ELEVATION AT CMU WALL (EXTERIOR / INTERIOR)

SCALE:NONE

NOTE: SEE ARCH PLAN DWGS FOR CMU WALLS.
WALL REINFORCING SHOWN ABOVE IS MIN. REQUIRED IN WALLS.
ADDITIONAL WALL REINFORCING SIZES AND SPACING ARE GIVEN IN CMU WALL REINF. SCHEDULE, SECTIONS AND DETAILS.

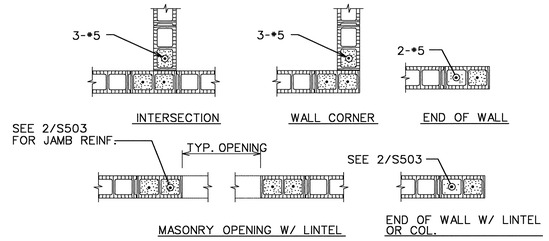

TYPICAL CONCRETE MASONRY UNIT DETAILS

1 S503 S503 SECTION
SCALE: NONE

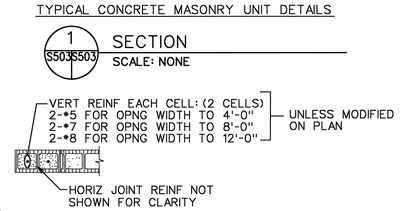

NOTE:
OPNG WIDTH SHALL NOT EXCEED 12'-0" FOR THIS TYPE OF JAMB

2 S503 S503 JAMB DETAIL
SCALE: NONE

NOTES:

1. ALL CMU SHALL BE REINFORCED AS INDICATED, ON PLANS, SECTIONS, DETAILS INCLUDING ADDITIONAL REINFORCING AT ALL OPENINGS. TYPICAL CONDITIONS SHOWN ON THIS DRAWING ARE GENERAL AND SHALL BE USED TO COVER ALL CONDITIONS UNO.
2. ALL WALLS SHALL BE LATERALLY SUPPORTED AT TOP OR AT INTERFACE WITH STRUCTURAL MEMBERS (TYP). UNO
3. PROVIDE 3/4" MIN. GAP BETWEEN CMU AND BOTTOM OF SLAB OR STEEL, ETC. AND PROVIDE COMPRESSIBLE FILLER IN GAP THAT MAINTAINS FIRE RATING.
4. VERTICAL REINFORCING SHALL BE CONTINUOUS THRU LINTEL OR BOND BEAMS.
5. PROVIDE 16" MINIMUM BEARING FOR ALL CMU LINTELS.
6. ALL CELLS THAT CONTAIN REINFORCING BARS SHALL BE GROUTED SOLID.
7. FOR GENERAL NOTES SEE DRAWINGS S001 AND S002.
8. ALL STRUCTURAL STEEL ROLLED SHAPES AND PLATES SHALL BE ASTM GRADE 36.

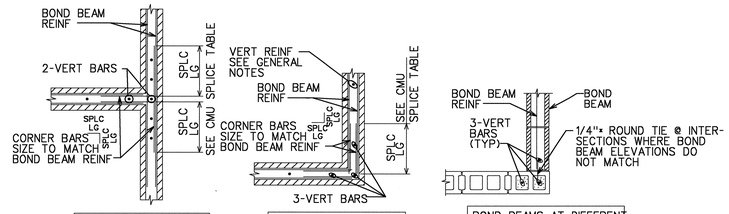

BOND BEAM REINFORCING AT WALL INTERSECTIONS

3 S503 S503 SECTION
SCALE: NONE

MAXIMUM CMU WALL UNSUPPORTED HEIGHT OR LENGTH			
	WALL THICKNESS	EXTERIOR WALL NON-LOAD BEARING	INTERIOR NON-LOAD BEARING WALL
MAX HEIGHT OR LENGTH BETWEEN BETWEEN SUPPORTS	8"	12'-0"	24'-0"

NOTE: CMU WALL MAXIMUM LATERAL SUPPORT SPACING GIVEN IN SECTIONS AND DETAILS SHALL SUPERCEDE THE ABOVE SCHEDULE REQUIREMENTS.

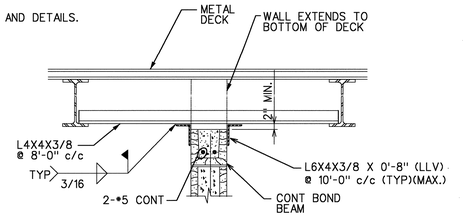

TYPICAL INTERIOR CMU WALL SUPPORT AT ROOF WALL PARALLEL TO JOIST

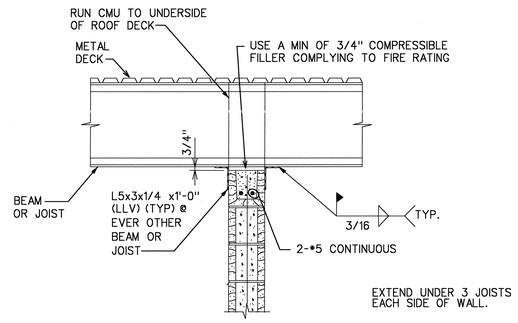

TYPICAL INTERIOR CMU WALL BRACING PERPENDICULAR TO JOIST OR BEAM

4 S503 S503 SECTION
SCALE: NONE

TYPICAL CMU LINTEL SCHEDULE					
MAXIMUM CLR OPENING	WIDTH	DEPTH	HORIZONTAL REINF BOTTOM	HORIZONTAL REINF TOP	MIN. BEARING @ EA. END
4'-0"	8"	8"	2-#4	—	8
6'-0"	8"	1'-4"	2-#5	2-#4	8
8'-0"	8"	1'-4"	2-#5	2-#4	16
10'-0"	8"	1'-4"	2-#6	2-#4	16
12'-0"	8"	2'-0"	2-#6	2-#6	16
4'-0"	6"	8"	2-#4	—	8
6'-0"	6"	1'-4"	2-#5	2-#4	8
8'-0"	6"	1'-4"	2-#5	2-#4	16

BRICK/BLOCK LINTEL SCHEDULE		
SPAN	4" BRICK/BLOCK	8" BLOCK
SPANS UP TO 5'-0"	1 – L5 x 5 x ?	SEE CMU LINTEL SCHEDULE
5'-0" TO 7'-0"	1 – L5 x 5 x ?	SEE CMU LINTEL SCHEDULE
7'-0" TO 8'-0"	1 – L5 x 5 x ?	SEE CMU LINTEL SCHEDULE
8'-0" TO 9'-0"	1 – L5 x 5 x ?	SEE CMU LINTEL SCHEDULE
9'-0" TO 14'-0"	⊥ L 5 x 5 x ? AND C6x8.2 – SEE DET 12/S503	

NOTE: MINIMUM BEARING 6" UNLESS NOTED

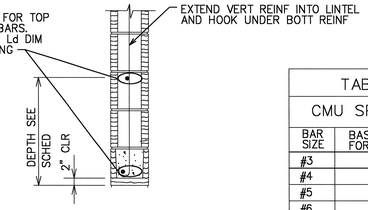

LINTEL BLOCK W/ GROUT

TABLE I CMU SPLICE TABLE	
BAR SIZE	BASIC LAP SPLICE Ld FOR CMU REINFORCING
#3	1'-6"
#4	2'-0"
#5	2'-6"
#6	3'-0"
#7	3'-6"

NOTES:

1. OPENING WIDTH SHALL NOT EXCEED 12'-0"
2. GROUT CELLS TO NOTED LINTEL DEPTH.
3. STIRRUPS SHALL HAVE 180° HOOK ON EACH END.

9 S503 S503 SECTION
SCALE: NONE

TYPICAL MIN. CMU WALL REINFORCING					
WALL THICKNESS	VERT BARS MIN SIZE MAX SPACING	BOND BEAM BAR SIZE	BOND BEAM MAX.SPACING	REMARKS	COMMENTS
8"	1-#4@48" (UNO)	2-#5'S	4'-0"		ALL WALLS UNLESS NOTED OTHERWISE
8"	1-#5@24" (UNO)	2-#5'S	8'-0'	NOTE 1	

NOTE: 1. REINFORCING SIZES AND SPACING GIVEN IN SECTIONS AND DETAILS SHALL SUPERCEDE THE ABOVE SCHEDULE REQUIREMENTS.

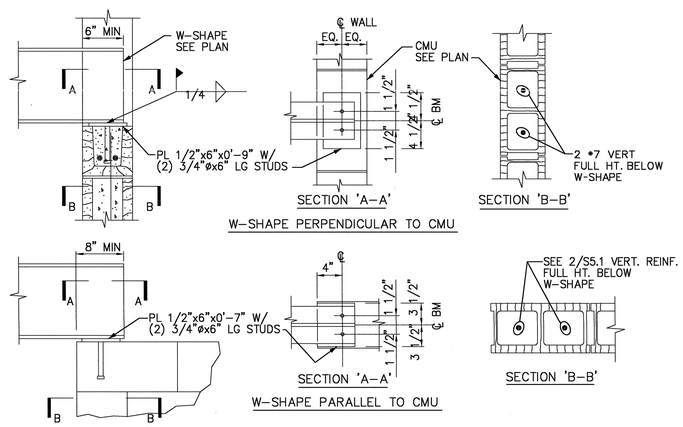

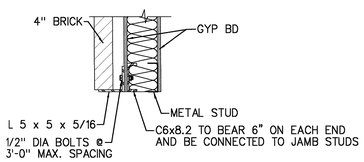

12 S503 S503 DETAIL
SCALE: 1" = 1'-0"

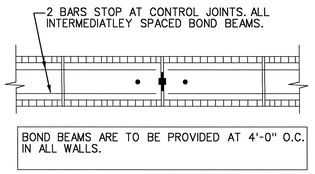

NOTE: SEE ARCH DWGS FOR CONTROL JOINT LOCATIONS

BOND BEAMS AT CONTROL JOINTS

11 S503 S503 DETAIL
SCALE: NONE

1 0 1 2FT
SCALE: 1 "=1'-0"

US ARMY CORPS OF ENGINEERS
SAVANNAH DISTRICT

DESIGNED BY	CHECKED BY	SIZE F
CATEGORY CODE 721-81-06	CONTRACT NO: DACA21-02-C-0046	DATE: 23 APRIL 2003 PLOT SCALE: 1

CLARK CONSTRUCTION
CLARK DESIGN/BUILD, LLC

SYMBOL	DESCRIPTION	DATE	BY

BASIC COMBAT TRAINEE BARRACKS COMPLEX I
FORT JACKSON, SOUTH CAROLINA
TRAINEE BARRACKS

TYPICAL MASONRY SECTIONS AND DETAILS

PLATE REFERENCE NUMBER:
S-503
SHEET 76

DESIGN FILE: $$FILE NAME$$
$$DATE$$

CONFORMED DRAWINGS 12 /19 /03