Amendment 0001

Appendix K = Fort Jackson Design Files
Vol. 6 CEP Drawings Files

GENERAL NOTES

1. REFERENCE ELEVATION - COORDINATE WITH CIVIL SHEETS FOR FINISH FLOOR ELEVATIONS.
2. ALL INTERIOR FLOOR SLABS-ON-GRADE SHALL BE PLACED OVER A 6 MIL VAPOR BARRIER WHICH IS OVER A 4" CRUSHED STONE FILL.
3. THE DRAWINGS SHOWN AS THE STRUCTURAL "S" SHEETS ARE APPLICABLE FOR (1) COMPLETE BUILDING ONLY. REFER TO CIVIL SHEETS AND PROJECT SCOPE FOR TOTAL NUMBER OF BUILDINGS REQUIRED.
4. STRUCTURAL DRAWINGS ARE INTENDED TO BE USED IN CONJUNCTION WITH ENTIRE SET OF CONTRACT DRAWINGS. CONTRACTOR IS RESPONSIBLE FOR COORDINATING ALL RELATED ITEMS IN THE WORK.
5. THE CONTRACTOR SHALL VERIFY DIMENSIONS AND CONDITIONS PRIOR TO CONSTRUCTION AND NOTIFY THE CONTRACTING OFFICER'S REPRESENTATIVE OF ANY DISCREPANCIES, INCONSISTENCIES OR DIFFICULTIES AFFECTING THE WORK BEFORE PROCEEDING.
6. SUBSTITUTION OF EXPANSION ANCHORS FOR EMBEDDED ANCHORS SHOWN ON THE DRAWINGS WILL NOT BE PERMITTED.
7. NO PIPES, SLEEVES, OR ETC. SHALL PASS THROUGH BEAMS OR COLUMNS UNLESS INDICATED ON PLAN.

DESIGNER NOTES

1. FOUNDATION INFORMATION:
   A. MAXIMUM NET ALLOWABLE SOIL BEARING PRESSURE:
      (1) CONTINUOUS FOOTINGS: 3000 PSF
      (2) SPREAD FOOTINGS: 3000 PSF
2. STRUCTURE CLASSIFICATION PER ASCE 7-98:
   CATEGORY II
3. DESIGN ROOF LIVE LOAD (CONSTRUCTION AND MAINTENANCE): 20 PSF
4. WIND LOADS: WIND LOADS ARE COMPUTED IN ACCORDANCE WITH ASCE 7-98 USING THE FOLLOWING FACTORS:
   A. BASIC 50-YEAR WIND SPEED: 90 MPH
   B. SITE CLASS: CATEGORY II
   C. EXPOSURE FACTOR: EXPOSURE C SITING
   D. REFER TO WIND UPLIFT DIAGRAM ON SHEET S002
5. SEISMIC LOADS: SEISMIC LOADS ARE COMPUTED IN ACCORDANCE WITH TI809-04
   A. SEISMIC USE GROUP: I
   B. PERFORMANCE OBJECTIVE: 1A. (LIFE SAFETY)
   C. SITE CLASSIFICATION: D
   D. DESIGN SPECTRAL RESPONSE ACCELERATIONS, Ss=0.59 & S1=0.19.
   E. SEISMIC DESIGN CATEGORY: D

STRUCTURAL STEEL

1. STRUCTURAL STEEL SHALL MEET THE LATEST AISC "SPECIFICATION FOR STRUCTURAL STEEL BUILDINGS."
2. STEEL FRAMING MEMBERS SHALL ONLY BE SPLICED AT LOCATIONS SHOWN ON THE DESIGN DRAWINGS OR SHOWN ON AND APPROVED ON THE SHOP DRAWINGS.
3. STRUCTURAL STEEL SHOP DRAWINGS SHALL BE PREPARED UNDER THE SUPERVISION OF A LICENSED PROFESSIONAL ENGINEER.
4. ALL STRUCTURAL STEEL SHALL MEET ASTM A572 GRADE 50 EXCEPT STRUCTURAL TUBING SHALL MEET ASTM A500, GRADE B, AND STRUCTURAL PIPING SHALL MEET ASTM A53, GRADE B.
5. ALL BEAM AND COLUMN CONNECTIONS SHALL BE MADE WITH A325 OR A490 BOLTS. CONNECTIONS SHALL BE DESIGNED AS BEARING (TYPE N) CONNECTIONS, UNLESS NOTED OTHERWISE. CONTRACTORS OPTION FOR BUILDING BRACE CONNECTIONS TO HAVE OVERSIZED HOLES AND BE SLIP CRITICAL. DESIGN CONNECTION AS FRICTION TYPE. PROVIDE LOAD INDICATOR BOLTS. DO NOT PAINT SURFACES OF STEEL IN CONTACT WITH EACH OTHER.
6. ALL ANCHOR BOLTS SHALL BE A307, OR A36 AND SHALL HAVE CUT THREADS.
7. ALL BOLTS SET IN CONCRETE SHALL BE FURNISHED WITH DOUBLE NUTS AND SHALL BE SET WITH A TEMPLATE.
8. PROVIDE ANGLE FRAME TO SUPPORT METAL DECK AT ALL OPENINGS GREATER THAN 9" x 9".
9. WELDING SHALL CONFORM TO AWS D1.1, "STRUCTURAL WELDING CODE". NO UNAUTHORIZED WELDS WILL BE ACCEPTED.
10. E70XX ELECTRODES SHALL BE USED FOR ALL WELDING.

COLD-FORMED STRUCTURAL METAL FRAMING

1. ALL COLD-FORMED STRUCTURAL METAL FRAMING SHALL HAVE A MINIMUM PROTECTIVE COATING EQUAL TO G-60 GALVANIZED FINISH. APPLY ZINC-RICH PAINT TO ALL AREAS WHERE FINISH IS DAMAGED DUE TO WELDING.
2. ALL STEEL FOR COLD-FORMED STRUCTURAL METAL FRAMING SHALL CONFORM TO ONE OF THE FOLLOWING ASTM STANDARDS: ASTM A653, A875, A792, OR A463.
3. ALL PRODUCTS SHALL BE FORMED FROM STEEL WITH A MINIMUM YIELD OF 33 ksi.
4. ALL STUD AND JOIST SECTIONS SHALL BE "C" TYPE SECTIONS WITH MINIMUM 1½" FLANGES AND A MINIMUM ½" RETURN UNLESS NOTED OTHERWISE.
5. ALL MEMBERS SHALL BE OF DEPTH AND GAGE AS INDICATED ON PLAN AND SECTIONS.
6. TRACK SECTIONS SHALL MEET OR EXCEED GAGE OF STUD MEMBERS, UNLESS OTHERWISE NOTED.
7. STRUCTURAL FRAMING MEMBERS SHALL CONFORM TO ASTM C955 AND HAVE ENGINEERING PROPERTIES CALCULATED IN ACCORDANCE WITH AISI "SPECIFICATION FOR THE DESIGN OF COLD-FORMED STEEL STRUCTURAL MEMBERS".
8. ALL FRAMING COMPONENTS SHALL BE CUT SQUARELY FOR ATTACHMENT TO PERPENDICULAR MEMBERS.
9. PROVIDE WEB STIFFENERS, CONNECTION ANGLES, AND MISCELLANEOUS HARDWARE REQUIRED TO COMPLETE ALL CONNECTIONS.
10. PROVIDE WALL STUD BRIDGING SPACED AT 48" MAXIMUM ON CENTERS IN EXTERIOR BEARING WALLS.
11. PROVIDE DEFLECTION TRACK AT THE TOP OF ALL NON-LOAD BEARING STUD WALLS WHERE THE TOP OF WALL ABUTS THE BOTTOM OF THE STRUCTURE.
12. FASTENING OF FRAMING COMPONENTS SHALL BE WITH SELF-TAPPING SCREWS OR WELDING OF SUFFICIENT SIZE TO INSURE THE STRENGTH OF THE CONNECTION. WELDS SHALL BE PERFORMED BY OPERATORS QUALIFIED IN ACCORDANCE WITH SECTION 6.0 OF THE AMERICAN WELDING SOCIETY'S "STRUCTURAL WELDING CODE - SHEET METAL" (AWS D1.3-8).
13. ATTACH STUDS TO TRACK WITH A MINIMUM OF ONE SCREW PER STUD FLANGE, UNLESS OTHERWISE NOTED, E.G. DEFLECTION TRACKS.
14. ANCHOR BASE TRACK TO FLOOR/FOUNDATION TO RESIST A MINIMUM OF 360 PLF LATERAL SHEAR FORCE.
15. ROOF TRUSSES SHALL BE ENGINEERED BY COLD FORMED SUPPLIER'S ENGINEER.
16. LOADS TO TRUSSES SHOWN IN DESIGN CRITERIA AND OTHERWISE SHOWN ON DRAWINGS SHALL BE TRANSFERRED TO THE STRUCTURAL STEEL.
17. THE TOP CHORD OF THE ROOF TRUSSES SHALL BE 16 GA. MINIMUM METAL THICKNESS.

CONSTRUCTION

1. CONTRACTOR SHALL DESIGN, PROVIDE, AND MAINTAIN TEMPORARY BRACING, SHORING, GUYING, ETC. AND OTHER METHODS AS REQUIRED TO PREVENT EXCESSIVE LOADING AND TO STABILIZE STRUCTURAL ELEMENTS DURING CONSTRUCTION. THESE METHODS SHALL REMAIN IN PLACE UNTIL ALL MEMBERS AND FINAL CONNECTIONS HAVE BEEN COMPLETED.

CAST-IN-PLACE CONCRETE

1. ALL CONCRETE SHALL HAVE MINIMUM COMPRESSIVE STRENGTHS AT 28 DAYS AS FOLLOWS:
   ELEVATED FLOOR SLABS 4000 PSI
   ALL OTHER 3000 PSI
2. CONCRETE FOR ELEVATED SLABS SHALL CONTAIN LIGHTWEIGHT AGGREGATE TO ACHIEVE A DENSITY OF 115 PCF.
3. ALL AGGREGATE FOR NORMAL WEIGHT CONCRETE SHALL MEET ASTM C33.
4. ALL AGGREGATE FOR STRUCTURAL LIGHTWEIGHT CONCRETE SHALL BE ASTM C330.
5. EXTERIOR EXPOSED CONCRETE SHALL HAVE FROM 4 TO 7% ENTRAINED AIR.
6. CONCRETE SHALL BE IN STRICT CONFORMANCE WITH THE CURRENT "ACI MANUAL OF CONCRETE PRACTICE".
7. NO ALUMINUM SHALL BE PLACED IN CONCRETE.
8. SLABS ON EARTH SHALL BE 6" THICK @ CEP WITH 6x6-W2.0xW2.0 WELDED WIRE FABRIC UNLESS OTHERWISE NOTED.
9. CONTRACTION JOINTS OR CONSTRUCTION JOINTS IN SLABS ON GRADE SHALL BE SPACED TO DIVIDE THE SLAB INTO PANELS NOT TO EXCEED 250 SQUARE FEET UNLESS NOTED OTHERWISE, THE LONGER DIMENSION OF EACH PANEL SHALL NOT EXCEED THE SHORTER DIMENSION BY MORE THAN 20 PERCENT.
10. PROVIDE CONCRETE BASES FOR MECHANICAL EQUIPMENT. ALL SHALL BE 4" THICK ON TOP OF FLOOR SLABS ON GRADE WITH WELDED WIRE FABRIC, UNLESS OTHERWISE NOTED.
11. NO ELECTRICAL CONDUIT SHALL BE CAST IN A STRUCTURAL CONCRETE SYSTEM WITHOUT ARCHITECT/ENGINEER APPROVAL.

REINFORCING STEEL

1. ALL MESH SHALL MEET ASTM A-185. LAP A MINIMUM OF 12 INCHES.
2. FURNISH MESH FOR SLABS ON METAL DECK IN FLAT SHEETS.
3. ALL REINFORCING SHALL MEET ASTM A615 GRADE 60.
4. UNLESS NOTED OTHERWISE, THE LAP AND EMBEDMENT LENGTHS SHALL BE IN ACCORDANCE WITH THE LENGTHS SHOWN IN THE TABLE.
5. REINFORCING SHALL BE DETAILED ACCORDING TO THE ACI DETAILING MANUAL UNDER THE SUPERVISION OF A LICENSED STRUCTURAL ENGINEER.
6. PROVIDE CORNER LAP BARS TO MATCH IN SIZE AND SPACING OF ALL HORIZONTAL BARS.

PRE-ENGINEERED BUILDING:

1. THE DESIGN SHALL BE THE RESPONSIBILITY OF THE PRE-ENGINEERED BUILDING MANUFACTURER AND SHALL BE PREPARED UNDER THE DIRECT SUPERVISION OF A PROFESSIONAL ENGINEER REGISTERED IN THE STATE OF SOUTH CAROLINA.
2. DESIGN CRITERIA
   A. PRIMARY AND SECONDARY STRUCTURAL MEMBERS AND EXTERIOR COVERING MATERIALS: METAL BUILDING MANUFACTURER'S ASSOCIATION'S (MBMA) "DESIGN PRACTICES MANUAL".
   B. STRUCTURAL STEEL MEMBERS: AMERICAN INSTITUTE OF STEEL CONSTRUCTION'S (AISC) "SPECIFICATIONS FOR THE DESIGN, FABRICATION AND ERECTION OF STRUCTURAL STEEL FOR BUILDINGS".
   C. LIGHT GAGE STEEL MEMBERS: AMERICAN IRON AND STEEL INSTITUTE'S (AISI) "SPECIFICATION FOR THE DESIGN OF COLD FORMED STEEL STRUCTURAL MEMBERS" AND "DESIGN OF LIGHT GAGE STEEL DIAPHRAGMS".
   D. FOR WELDED CONNECTIONS: AMERICAN WELDING SOCIETY'S (AWS) "STANDARD CODE FOR ARC AND GAS WELDING IN BUILDING CONSTRUCTION".
3. DESIGN LOADS: BASIC DESIGN LOADS, AS WELL AS AUXILIARY AND COLLATERAL LOADS, ARE INDICATED BELOW.
   A. GRAVITY LIVE LOADS, WIND AND SEISMIC LOADS AS INDICATED IN "DESIGN CRITERIA" SECTION OF THESE NOTES.
   B. BASIC DESIGN LOADS INCLUDE, IN ADDITION TO DEAD LOAD, LIVE LOAD, WIND LOAD, SEISMIC LOAD, CRANE LOAD WHERE INDICATED ON THE DRAWINGS.
   C. AUXILIARY LOADS INCLUDE DYNAMIC LIVE LOADS SUCH AS THOSE GENERATED BY CRANES AND MATERIALS HANDLING EQUIPMENT.
   D. COLLATERAL LOADS INCLUDE ADDITIONAL DEAD LOADS OVER AND ABOVE THE WEIGHT OF THE METAL BUILDING SYSTEM SUCH AS MECHANICAL SYSTEMS AND LIGHTING LOADS.
   E. DESIGN EACH MEMBER TO WITHSTAND STRESSES RESULTING FROM COMBINATIONS OF LOADS THAT PRODUCE ALLOWABLE STRESSES IN THAT MEMBER, AS PRESCRIBED IN MBMA'S "DESIGN PRACTICES MANUAL".
4. SUBMIT COMPLETE DESIGN CALCULATIONS AND ERECTION DRAWINGS SHOWING ANCHOR BOLT SETTINGS, SIDEWALL, ENDWALL, AND ROOF FRAMING, TRANSVERSE CROSS SECTIONS, COVERING AND TRIM DETAILS, AND ACCESSORY INSTALLATION DETAILS TO CLEARLY INDICATE PROPER ASSEMBLY OF BUILDING COMPONENTS.
5. DESIGN CALCULATIONS AND ERECTION DRAWINGS SHALL BE SEALED AND SIGNED BY A PROFESSIONAL ENGINEER REGISTERED IN THE STATE OF SOUTH CAROLINA.
6. FRAMES SHALL BE DESIGNED ON THE BASIS OF ELASTIC BEHAVIOR.
7. STRUCTURAL PLATE OR BAR STOCK SHALL HAVE A MINIMUM YIELD OF 50 ksi.
8. COLD-FORMED STRUCTURAL STEEL SHALL HAVE A MINIMUM YIELD STRENGTH OF 55 ksi.

TYPICAL CONCRETE COVER FOR REINFORCING STEEL

UNLESS NOTED OTHERWISE, THE FOLLOWING MINIMUM CONCRETE COVER SHALL BE PROVIDED FOR REINFORCING STEEL IN ACCORDANCE WITH ACI 318.

PLACEMENT/ EXPOSURE CONDITION	MINIMUM COVER
(a) CONCRETE CAST AGAINST AND PERMANENTLY EXPOSED TO EARTH....	3"
(b) CONCRETE EXPOSED TO EARTH OR WEATHER:	
#6 BARS AND LARGER....	2"
#5 BARS AND SMALLER....	1½"
(c) CONCRETE NOT EXPOSED TO WEATHER OR IN CONTACT WITH GROUND:	
(i) SLABS AND WALLS: #11 BARS AND SMALLER...	¾"
(ii) BEAMS AND COLUMNS: PRIMARY REINFORCEMENT, TIES, AND STIRRUPS...	1½"

DESIGN CRITERIA

1. SUPERIMPOSED ROOF LIVE LOAD = 20 psf
2. COLLATERAL (MECHANICAL, ELECTRICTAL, etc) ROOF LOADS TO BE COORDINATED THROUGH DESIGN/BUILD CONTRACTOR.
3. LIVE LOAD FOR OFFICE CAP SLABS = 25 psf.
4. LATERAL DRIFT LIMIT AT EAVE SHALL BE H/240.

MINIMUM LAP SPLICES OF REINFORCING BARS IN TENSION (PER ACI 318-89)

CENTER TO CENTER BAR SPACING / BAR SIZE	f'c = 4000psi (--TOP BARS--) LESS THAN 4db	4db OR MORE	(--OTHER BARS--) LESS THAN 4db	4db OR MORE	4db	f'c = 3000psi (--TOP BARS--) LESS THAN 4db	4db OR MORE	(--OTHER BARS--) LESS THAN 4db	4db OR MORE	4db
#3	18	18	16	16	11 1/2 "	21	21	16	16	11 1/2 "
#4	26	24	20	19	2"	30	28	23	22	2"
#5	40	30	31	23	2 1/2 "	46	35	36	27	2 1/2 "
#6	57	36	44	28	3"	65	42	50	32	3"
#7	77	42	59	33	3 1/2 "	89	50	69	39	3 1/2 "
#8	102	51	78	39	4"	117	66	90	51	4"
#9	129	64	99	50	4 1/2 "	148	83	114	64	4 1/2 "
#10	163	82	126	63	5"	188	106	145	81	5"
#11	200	100	159	77	5 5/8 "	231	130	178	100	5 5/8 "

NOTES:
1. YIELD STRENGTH OF REINFORCEMENT, fy, IS 60 ksi (LAP SPLICE LENGTH IS IN INCHES).
2. CONCRETE IS NORMAL WEIGHT (150 pcf).
3. TOP BAR INDICATES HORIZONTAL REINFORCEMENT WHICH IS PLACED ABOVE 12" OR MORE OF FRESH CONCRETE.
4. UNLESS NOTED OTHERWISE COLUMNS & PIERS UTILIZE TENSION LAP SPLICES.
5. STRAIGHT DEVELOPMENT LENGTH OF AN UNLAPPED BAR IS EQUAL TO VALUE FROM TABLE DIVIDED BY 1.3.
6. CATEGORY FOR BARS SPACED LESS THAN 4d, ON CENTER CORRESPONDS TO CATEGORY 1 IN THE CRSI HANDBOOK WHEREAS FOR BARS SPACED 4d, OR MORE ON CENTER CORRESPOND TO CRSI CATEGORY 5.

US ARMY CORPS OF ENGINEERS
SAVANNAH DISTRICT

DESIGNED BY | CHECKED BY | SIZE F
CATEGORY CODE 721-81-06
CONTRACT NO: DACA21-02-C-0046
DATE: 23 APRIL 2003
PLOT SCALE:

CLARK CONSTRUCTION
CLARK DESIGN/BUILD, LLC

SYMBOL	DESCRIPTION	DATE	BY

BASIC COMBAT TRAINEE BARRACKS COMPLEX I
FORT JACKSON, SOUTH CAROLINA
CENTRAL ENERGY PLANT

STRUCTURAL GENERAL NOTES

PLATE REFERENCE NUMBER:
S-001
SHEET 18

DESIGN FILE: $$FILE NAME$$
$$DATE$$

CONFORMED DRAWINGS 11/21/03

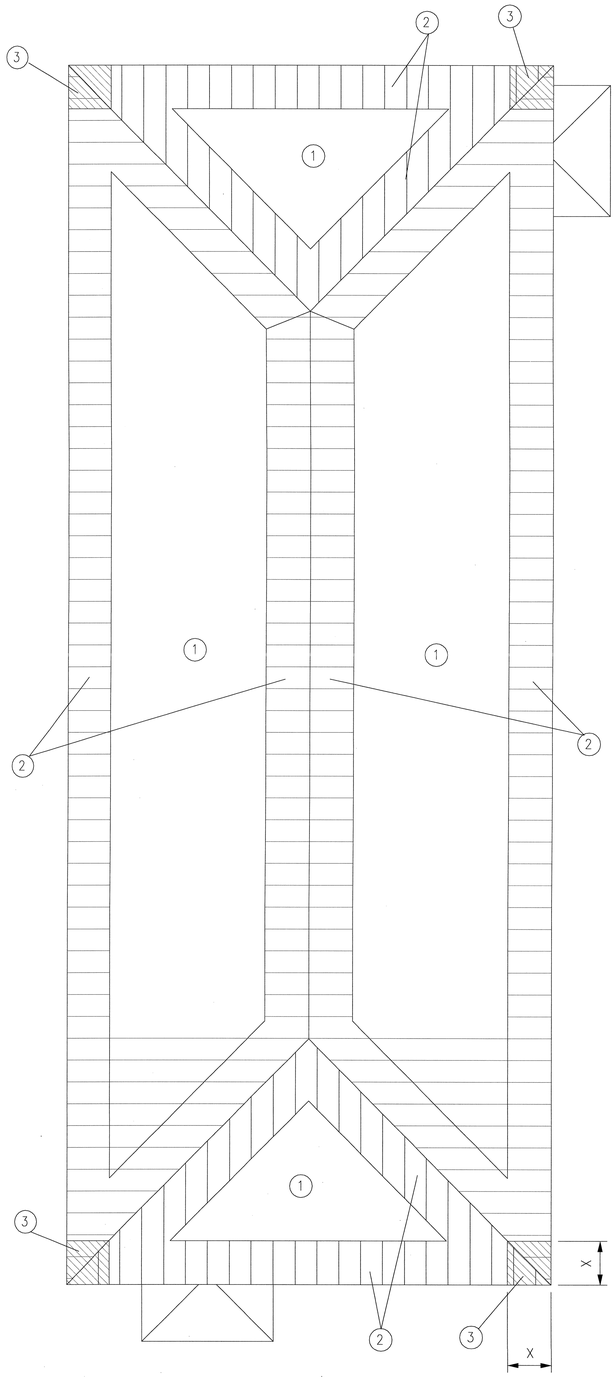

CENTRAL ENERGY PLANT
ROOF UPLIFT DIAGRAM

ROOF MEAN HEIGHT = 28.5'				
LOCATION	UPLIFT PRESSURE (psf)			X
	①	②	③	
BLDG ROOF	-22	-46.3	-46.3	7 ft

1.0 WIND LOAD (PER ASCE 7-98)

1.0.1 BASIC WIND SPEED = 90 mph
EXPOSURE C; IMPORTANCE FACTOR I = 1.0

1.0.2 DESIGN WIND PRESSURE - MAIN WINDFORCE RESISTING SYSTEM

LOCATION	WINDWARD (@ MEAN ROOF HEIGHT)	LEEWARD (@ MEAN ROOF HEIGHT)	ROOF	
MAIN BUILDING	14.5 psf	-5.2 psf	-18 psf	(UPLIFT)
MAIN BUILDING @ CORNERS	20.0 psf	-10.4 psf	-25.5 psf	(UPLIFT)

1.0.3 DESIGN WIND PRESSURE - WALL COMPONENTS & CLADDING

EXTERIOR WALL SYSTEMS & THEIR ATTACHMENTS TO THE PRIMARY STRUCTURE SHALL BE DESIGNED FOR THE PRESSURES SHOWN IN THE DIAGRAM BELOW:

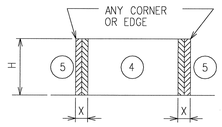

PRESSURE ON EXTERIOR WALL SYSTEMS FOR BUILDINGS WITH MEAN ROOF HEIGHT (H) = 0 TO 30 FT

LOCATION	H	WINDWARD PRESSURE psf (INWARD)		LEEWARD PRESSURE psf (OUTWARD)		X
		④	⑤	④	⑤	
MAIN BLDG	9	24	24	-26	-32	7 ft

1.0.4 DESIGN WIND PRESSURE - ROOF UPLIFT

JOIST, ROOF DECK & FASTENERS SHALL BE DESIGNED FOR THE WIND PRESSURES SHOWN ON THIS DRAWING

2.0 SEISMIC LOAD (PER TI 809-04, DATED 31 DECEMBER 1998)

2.0.1 SEISMIC USE GROUP: I
2.0.2 SPECTRAL RESPONSE COEFFICIENTS: $S_S = 0.59$, $S_1 = 0.19$
2.0.3 SITE CLASS: D
2.0.4 BASIC SEISMIC FORCE RESISTING SYSTEM: MOMENT RESISTING FRAME SYSTEM, ORDINARY STEEL MOMENT FRAMES
2.0.5 SEISMIC RESPONSE COEFFICIENT: Cs = 0.131
2.0.6 DESIGN BASE SHEAR: 111 kips
2.0.7 ANALYSIS PROCEDURE: EQUIVALENT LATERAL FORCE PROCEDURE
2.0.8 SEISMIC DESIGN CATEGORY: D

US ARMY CORPS
OF ENGINEERS
SAVANNAH DISTRICT

DESIGNED BY | CHECKED BY | SIZE F
CATEGORY CODE 721-81-06
CONTRACT NO: DACA21-02-C-0046
DATE: 23 APRIL 2003
PLOT SCALE: :

CLARK DESIGN/BUILD, LLC

SYMBOL	DESCRIPTION	DATE	BY

BASIC COMBAT TRAINEE BARRACKS COMPLEX I
FORT JACKSON, SOUTH CAROLINA
CENTRAL ENERGY PLANT

STRUCTURAL
GENERAL NOTES

PLATE REFERENCE NUMBER:
S-002
SHEET 19

DESIGN FILE: $$FILE NAME$$
$$DATE$$

CONFORMED DRAWINGS 11/21/03

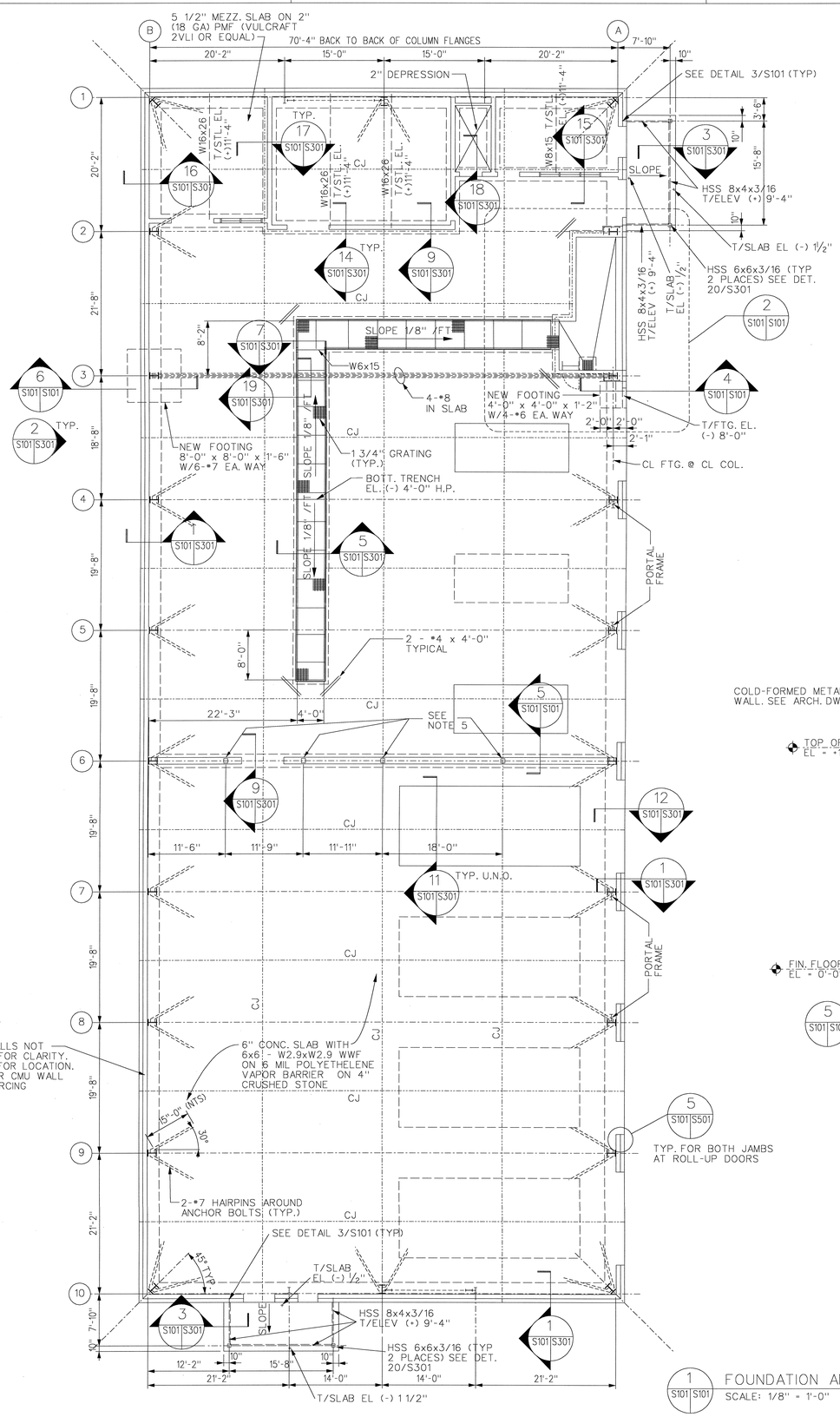

1 S101 S101 FOUNDATION AND SLAB PLAN
SCALE: 1/8" = 1'-0"

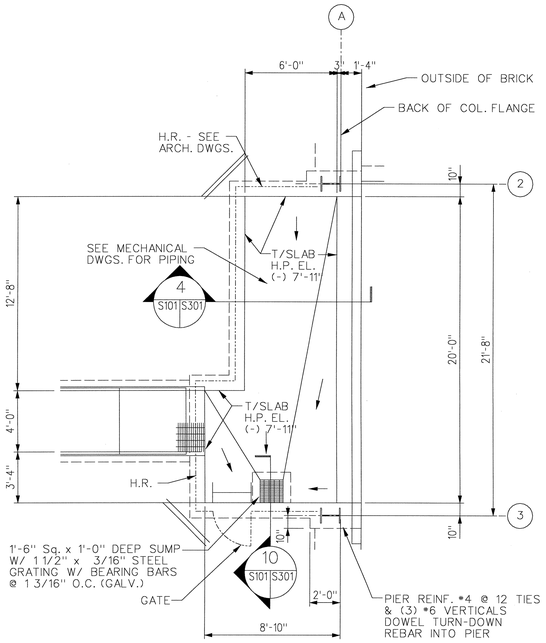

2 S101 S101 ENLARGED MECHANICAL PIT PLAN
SCALE: 1/4" = 1'-0"

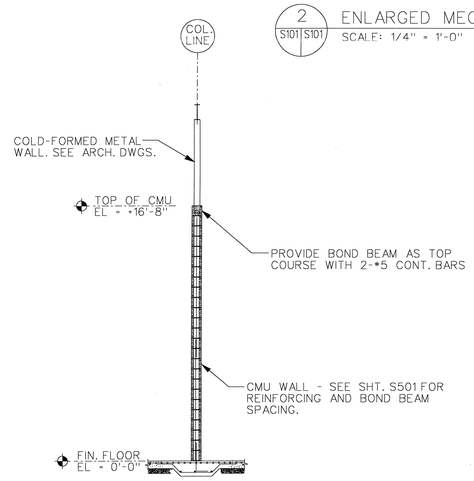

5 S101 S101 SECTION
SCALE: 1/4" = 1'-0"

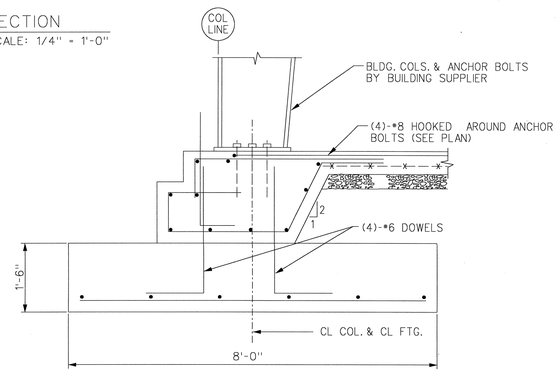

6 S101 S101 SECTION
SCALE: 3/4" = 1'-0"

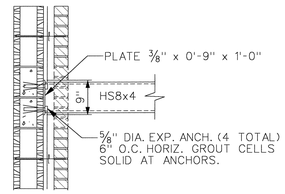

3 S101 S101 DETAIL
SCALE: 3/4" = 1'-0"

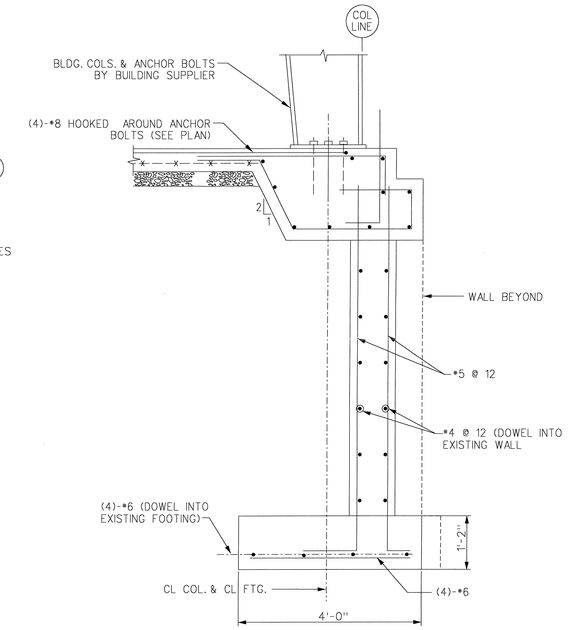

4 S101 S101 SECTION
SCALE: 3/4" = 1'-0"

NOTES:

1. SEE CIVIL DRAWINGS FOR BUILDING LOCATION AND ORIENTATION
2. FOUNDATIONS FOR BUILDING COLUMNS ARE DESIGNED FOR 35 kips VERTICAL AND 15 kips HORIZONTAL GRAVITY LOADS AND 6.5 kips VERTICAL UPLIFT. CONTRACTOR SHALL VERIFY COLUMN LOADS WITH BUILDING SUPPLIER. NOTIFY ENGINEER IF BUILDING LOADS EXCEED FOUNDATION DESIGN LOADS.
3. SEE DRAWING S301 FOR TYPICAL DETAILS.
4. SEE DRAWING S001 FOR GENERAL NOTES & DESIGN CRITERIA.
5. PROVIDE (4) HSS 8x8x1/4 POSTS WITHIN 12" CMU WALL WHERE SHOWN. BASE PLATE SHALL BE 1/2" x 11 1/2" x 11 1/2" W/ (4) 1/2" DIA. ANCHOR BOLTS. TOP SHALL BE CLIPPED TO ROOF GIRDER TO ALLOW FOR 1 1/2" OF VERTICAL MOVEMENT.
6. COORDINATE TRENCH/PIT SIZE AND LOCATION WITH MECHANICAL DRAWINGS.
7. CJ DENOTES SLAB CONSTRUCTION OR CONTROL JOINT. SEE TYPICAL DETAILS 2/S301 & 13/S301.
8. COLUMN FOOTINGS SHALL NOT BEAR DIRECTLY ON EXPANSIVE KAOLIN CLAY. IF CLAY IS FOUND IN FOOTING EXCAVATION, OVEREXCAVATE TO A LEVEL 30" BELOW FINISHED GRADE. BACKFILL WITH APPROVED MATERIAL COMPACTED AT 95% STANDARD PROCTOR. ALL FOUNDATIONS SHALL BE INSPECTED BY THE PROJECT GEOTECHNICAL ENGINEER.

8 6 4 2 0 8 16FT
SCALE: 1/8"=1'-0"
4 3 2 1 0 4 8FT
SCALE: 1/4"=1'-0"

US ARMY CORPS OF ENGINEERS
SAVANNAH DISTRICT

DESIGNED BY	CHECKED BY	SIZE F
CATEGORY CODE 721-81-06		
CONTRACT NO: DACA21-02-C-0046		
DATE: 23 APRIL 2003		
PLOT SCALE:		

LS3P

CLARK CONSTRUCTION
CLARK DESIGN/BUILD, LLC

SYMBOL	DESCRIPTION	DATE	BY

BASIC COMBAT TRAINEE BARRACKS COMPLEX I
FORT JACKSON, SOUTH CAROLINA
CENTRAL ENERGY PLANT

FOUNDATION AND SLAB PLAN

PLATE REFERENCE NUMBER:
S-101
SHEET 20

DESIGN FILE: $$FILE NAME$$
$$DATE$$

CONFORMED DRAWINGS 11/21/03

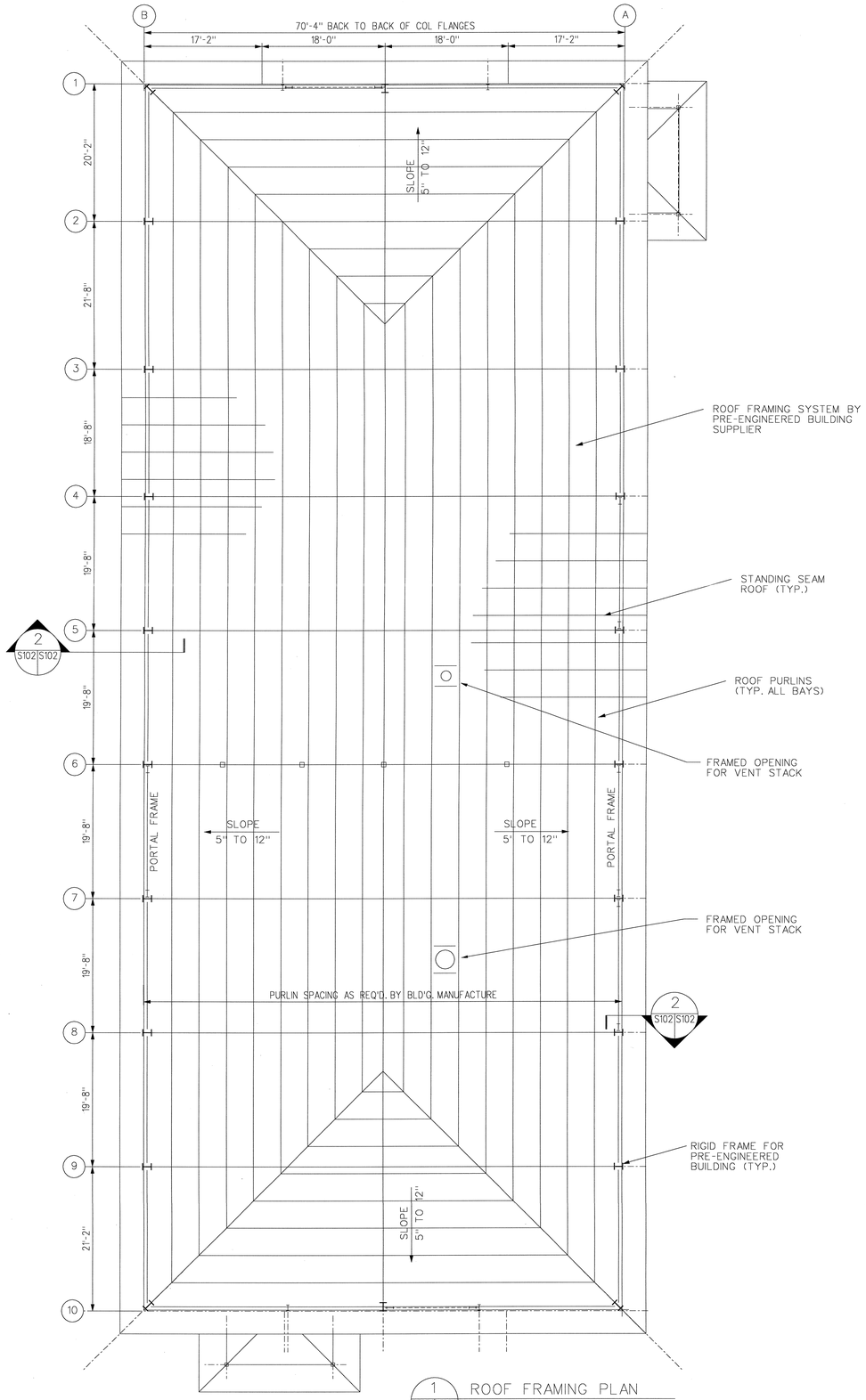

1 S102 S102 ROOF FRAMING PLAN
SCALE : 1/8" = 1'-0"

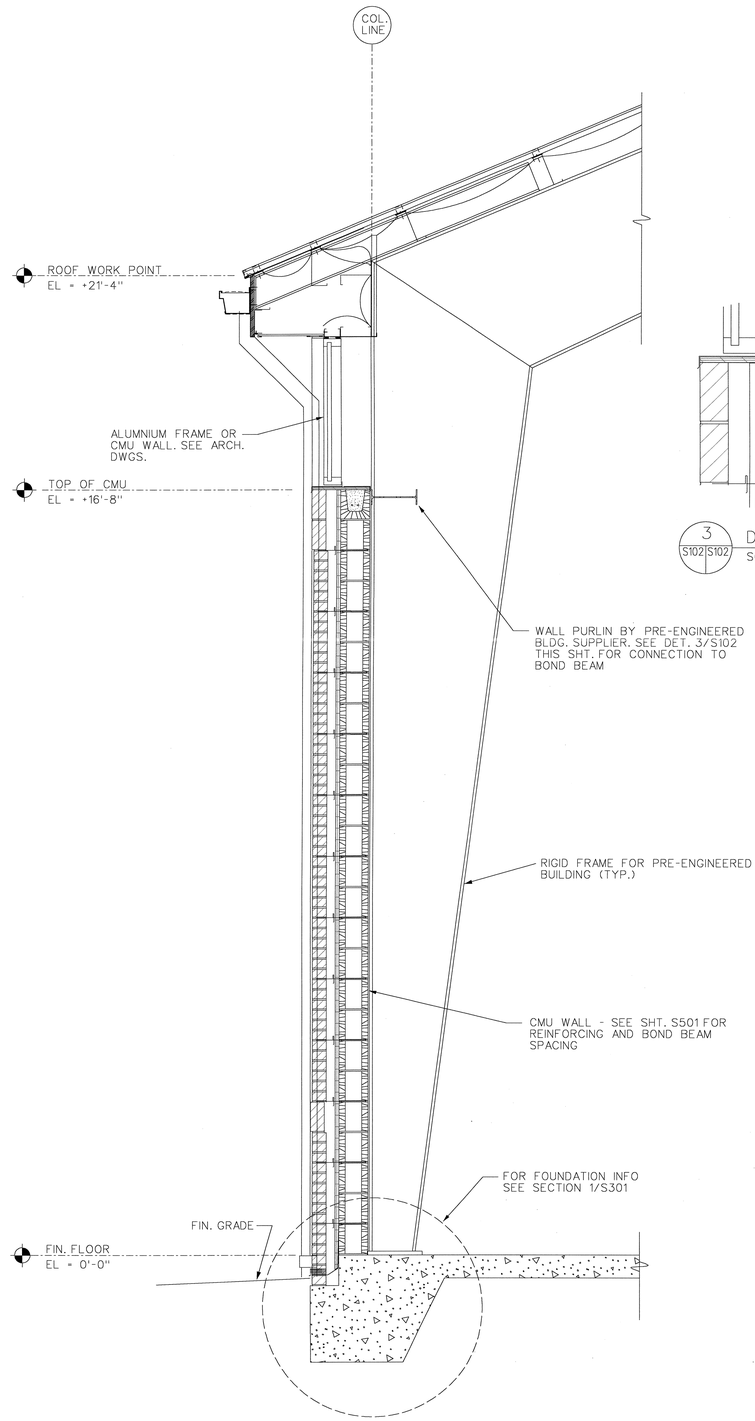

2 S102 S102 SECTION
SCALE: 3/4" = 1'-0"

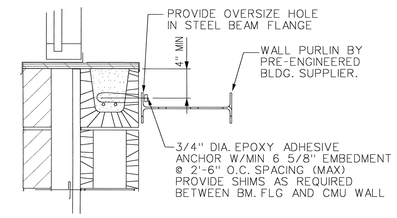

3 S102 S102 DETAIL
SCALE: 1 1/2" = 1'-0"

8 6 4 2 0 8 16FT
SCALE: 1/8"=1'-0"
1 0 1 2FT
SCALE: 3/4"=1'-0"
1 0 1FT
SCALE: 1 1/2"=1'-0"

US ARMY CORPS OF ENGINEERS
SAVANNAH DISTRICT

DESIGNED BY | CHECKED BY | SIZE F
CATEGORY CODE 721-81-06
CONTRACT NO: DACA21-02-C-0046
DATE: 23 APRIL 2003
PLOT SCALE:

CLARK CONSTRUCTION
CLARK DESIGN/BUILD, LLC

SYMBOL	DESCRIPTION	DATE	BY

BASIC COMBAT TRAINEE BARRACKS COMPLEX I
FORT JACKSON, SOUTH CAROLINA
CENTRAL ENERGY PLANT

ROOF FRAMING PLAN

PLATE REFERENCE NUMBER:
S-102
SHEET 21

DESIGN FILE: $$FILE NAME$$
$$DATE$$

CONFORMED DRAWINGS 11/21/03

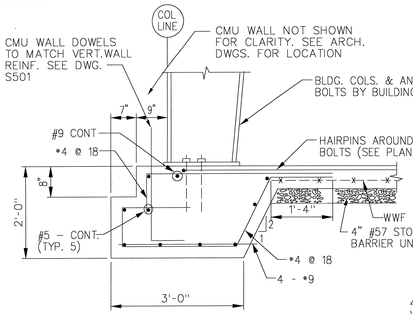

1 SECTION
S101 S301 SCALE: 3/4" = 1'-0"

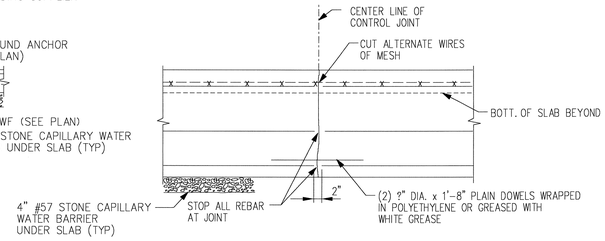

2 TYPICAL CONTROL JOINT AT SLAB TURNDOWN
S101 S301 SCALE: 3/4" = 1'-0"

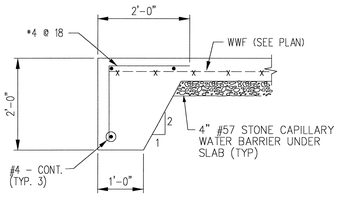

3 SECTION
S101 S301 SCALE: 3/4" = 1'-0"

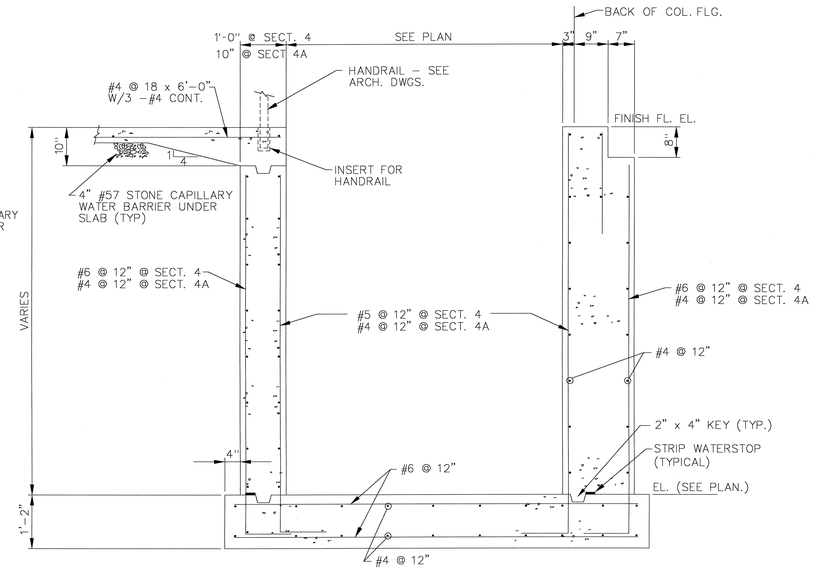

4 4A SECTION
S101 S301 S101 S301 SCALE: 3/4" = 1'-0"

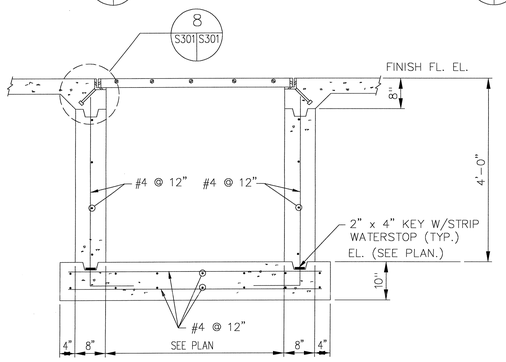

5 SECTION
S101 S301 SCALE: 3/4" = 1'-0"

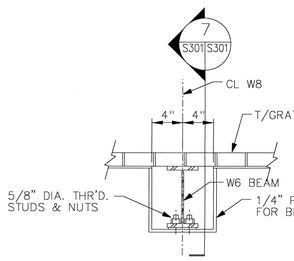

6 SECTION
S101 S301 SCALE: 3/4" = 1'-0"

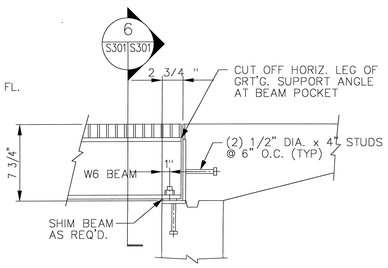

7 SECTION
S101 S301 SCALE: 3/4" = 1'-0"

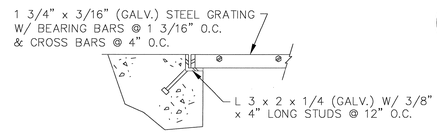

8 DETAIL
S101 S301 SCALE: 1 1/2 " = 1'-0"

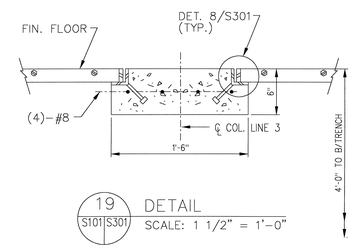

19 DETAIL
S101 S301 SCALE: 1 1/2" = 1'-0"

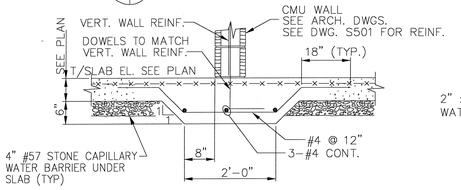

9 SECTION
S101 S301 SCALE: 3/4" = 1'-0"

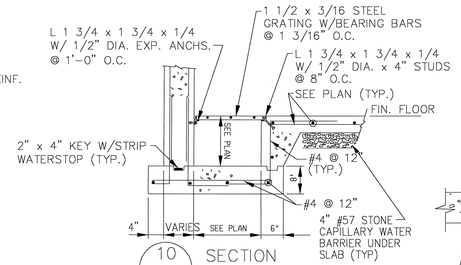

10 SECTION
S101 S301 SCALE: 3/4" = 1'-0"

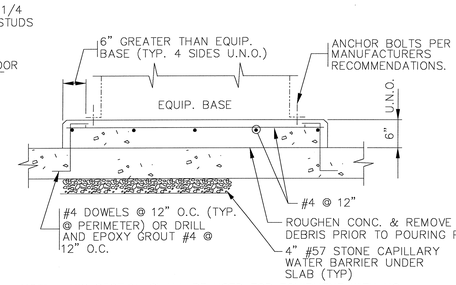

NOTE: THIS SECTION SHALL BE USED FOR EQUIPMENT WITH NO SIGNIFICANT DYNAMIC LOADING. CONTRACTOR SHALL NOTIFY ENGINEER CONCERNING EQUIPMENT THAT MAY IMPART DYNAMIC LOADING TO THE FOUNDATION AND OBTAIN APPROVAL PRIOR TO FABRICATION OR CONSTRUCTION.

11 SECTION
S101 S301 SCALE: 3/4" = 1'-0"

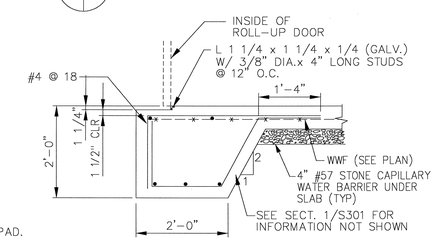

12 SECTION
S101 S301 SCALE: 3/4" = 1'-0"

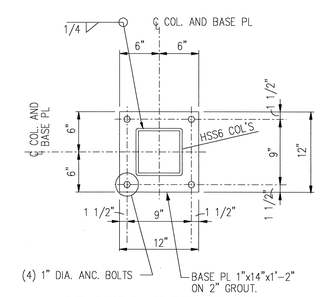

TYP. BASE PLATE FOR HSS6 COLUMNS

20 DETAIL
S101 S301 SCALE: NONE

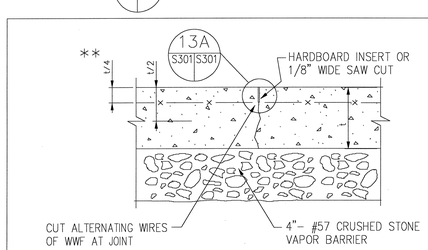

CONTRACTION CONTROL JOINT

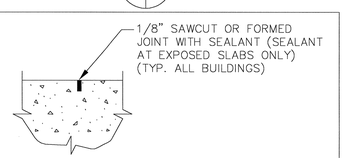

13A DETAIL
S301 S301 SCALE: NTS

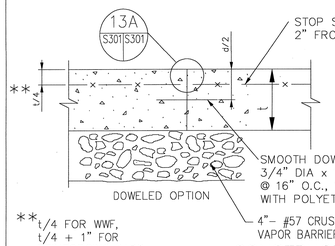

CONSTRUCTION JOINTS

13 SLAB ON GRADE DETAILS
S301 S301 SCALE: NONE

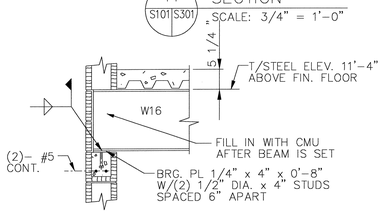

14 SECTION
S101 S301 SCALE: 3/4" = 1'-0"

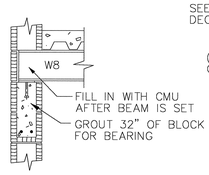

15 SECTION
S101 S301 SCALE: 3/4" = 1'-0"

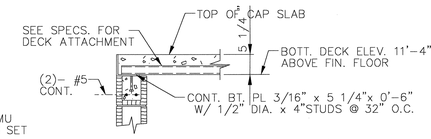

16 SECTION
S101 S301 SCALE: 3/4" = 1'-0"

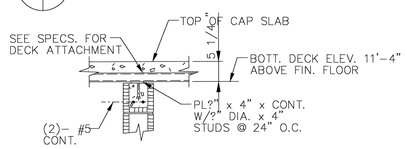

17 SECTION
S101 S301 SCALE: 3/4" = 1'-0"

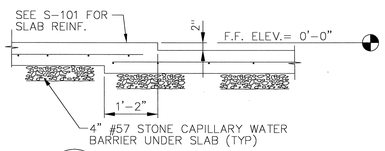

18 SECTION
S101 S301 SCALE: 3/4" = 1'-0"

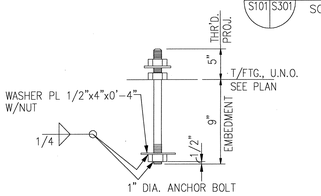

NOTE: BASE PLATES SIT ON 2" GROUT, U.N.O.

TYP. ANCHOR BOLT DETAIL

21 DETAIL
S301 S301 SCALE: NONE

SCALE: 2"=1'-0"

SCALE: 1 ?"=1'-0"

US ARMY CORPS OF ENGINEERS SAVANNAH DISTRICT

DESIGNED BY	CHECKED BY	SIZE F
CATEGORY CODE 721-81-06		
CONTRACT NO: DACA21-02-C-0046		
DATE: 23 APRIL 2003		
PLOT SCALE:		

ISP

CLARK CONSTRUCTION

CLARK DESIGN/BUILD, LLC

SYMBOL	DESCRIPTION	DATE	BY

BASIC COMBAT TRAINEE BARRACKS COMPLEX I
FORT JACKSON, SOUTH CAROLINA
CENTRAL ENERGY PLANT

SECTIONS AND DETAILS

PLATE REFERENCE NUMBER:
S-301
SHEET 22

DESIGN FILE: $$FILE NAME$$
$$DATE$$

CONFORMED DRAWINGS 11/21/03

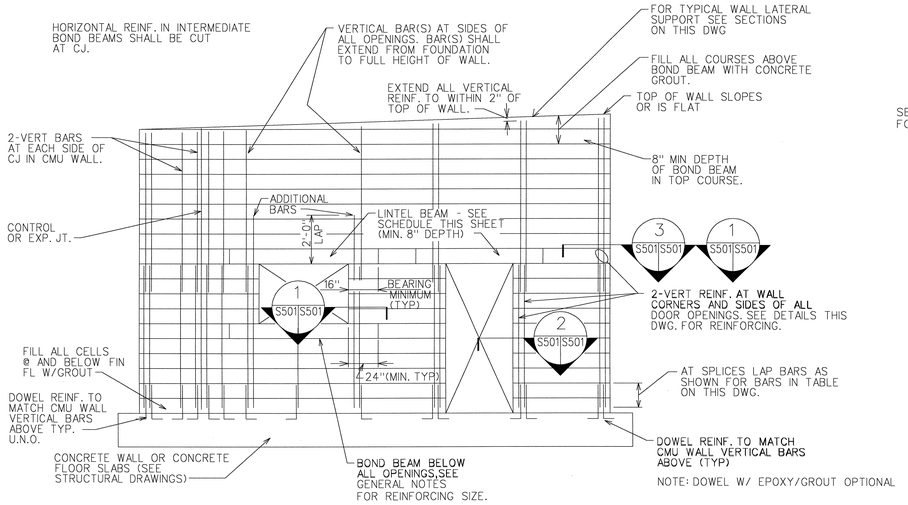

TYPICAL ELEVATION AT CMU WALL (EXTERIOR / INTERIOR)

SCALE:NONE

NOTE: SEE ARCH PLAN DWGS FOR CMU WALLS.
WALL REINFORCING SHOWN ABOVE IS MIN. REQUIRED IN WALLS.
ADDITIONAL WALL REINFORCING SIZES AND SPACING ARE GIVEN IN CMU WALL REINF. SCHEDULE, SECTIONS AND DETAILS.

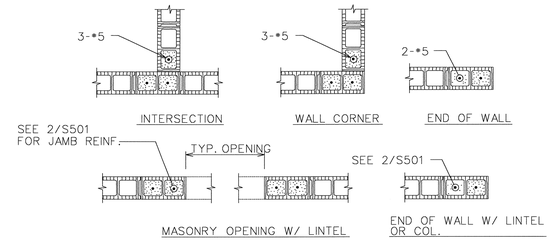

TYPICAL CONCRETE MASONRY UNIT DETAILS

1 S501|S501 SECTION

SCALE: NONE

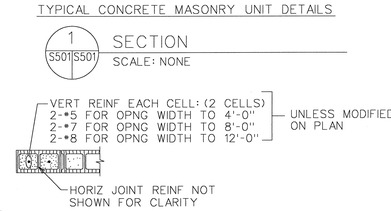

NOTE:
OPNG WIDTH SHALL NOT EXCEED 12'-0" FOR THIS TYPE OF JAMB

2 S501|S501 JAMB DETAIL

SCALE: NONE

NOTES:

1. ALL CMU SHALL BE REINFORCED AS INDICATED, ON PLANS, SECTIONS, DETAILS INCLUDING ADDITIONAL REINFORCING AT ALL OPENINGS. TYPICAL CONDITIONS SHOWN ON THIS DRAWING ARE GENERAL AND SHALL BE USED TO COVER ALL CONDITIONS UNO.
2. ALL WALLS SHALL BE LATERALLY SUPPORTED AT TOP OR AT INTERFACE WITH STRUCTURAL MEMBERS (TYP). UNO
3. PROVIDE 3/4" MIN. GAP BETWEEN CMU AND BOTTOM OF SLAB OR STEEL, ETC. AND PROVIDE COMPRESSIBLE FILLER IN GAP THAT MAINTAINS FIRE RATING.
4. VERTICAL REINFORCING SHALL BE CONTINUOUS THRU LINTEL OR BOND BEAMS.
5. PROVIDE 16" MINIMUM BEARING FOR ALL CMU LINTELS.
6. ALL CELLS THAT CONTAIN REINFORCING BARS SHALL BE GROUTED SOLID.
7. FOR GENERAL NOTES SEE DRAWINGS S001 AND S002
8. ALL STRUCTURAL STEEL ROLLED SHAPES AND PLATES SHALL BE ASTM GRADE 36.

US ARMY CORPS OF ENGINEERS
SAVANNAH DISTRICT

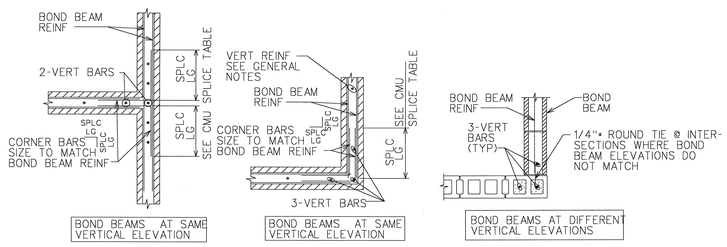

BOND BEAM REINFORCING AT WALL INTERSECTIONS

3 S501|S501 SECTION

SCALE: NONE

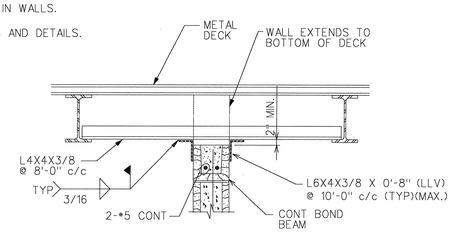

TYPICAL INTERIOR CMU WALL SUPPORT AT ROOF WALL PARALLEL TO JOIST

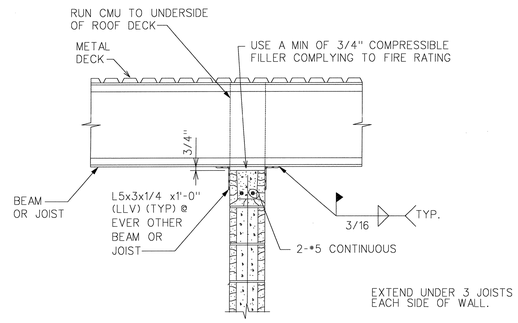

TYPICAL INTERIOR CMU WALL BRACING PERPENDICULAR TO JOIST OR BEAM

4 S501|S501 SECTION

SCALE: NONE

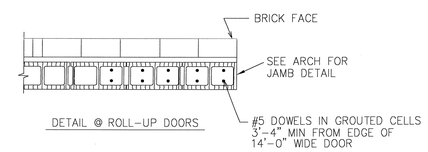

DETAIL @ ROLL-UP DOORS

5 S101|S501 DETAIL

SCALE: 1" = 1'-0"

MAXIMUM CMU WALL UNSUPPORTED HEIGHT OR LENGTH			
	WALL THICKNESS	EXTERIOR WALL NON-LOAD BEARING	INTERIOR NON-LOAD BEARING WALL
MAX HEIGHT OR LENGTH BETWEEN BETWEEN SUPPORTS	8"	16'-8"	24'-0"
	12"	SEE SECTION 5/S101	

NOTE: CMU WALL MAXIMUM LATERAL SUPPORT SPACING GIVEN IN SECTIONS AND DETAILS SHALL SUPERCEDE THE ABOVE SCHEDULE REQUIREMENTS.

BRICK/BLOCK LINTEL SCHEDULE		
SPAN	4" BRICK/BLOCK	8" BLOCK & 12" BLOCK
SPANS UP TO 5'-0"	1 - L6 x 6 x 5/16	SEE CMU LINTEL SCHEDULE
5'-0" TO 7'-0"	1 - L6 x 6 x 5/16	SEE CMU LINTEL SCHEDULE
7'-0" TO 8'-0"	1 - L6 x 6 x 5/16	SEE CMU LINTEL SCHEDULE
8'-0" TO 9'-0"	1 - L6 x 6 x 5/16	SEE CMU LINTEL SCHEDULE
9'-0" TO 14'-0"	SEE DETAIL 12/S501	

NOTE: MINIMUM BEARING 6" UNLESS NOTED

TYPICAL CMU LINTEL SCHEDULE						
MAXIMUM CLR OPENING	WIDTH	DEPTH	HORIZONTAL REINF BOTTOM	HORIZONTAL REINF TOP	STIRRUPS	MIN. BEARING @ EA. END
4'-0"	8" OR 12"	8"	2-#4	—	#3 @ 12	8
6'-0"	8" OR 12"	1'-4"	2-#5	2-#4	#3 @ 12	8
8'-0"	8" OR 12"	1'-4"	2-#5	2-#4	#3 @ 12	16
10'-0"	8"	1'-4"	2-#6	2-#4	#3 @ 12	16
12'-0"	8"	2'-0"	2-#6	2-#6	#3 @ 12	16

TYPICAL MIN. CMU WALL REINFORCING					
WALL THICKNESS	VERT BARS MIN SIZE MAX SPACING	BOND BEAM BAR SIZE	BOND BEAM MAX.SPACING	REMARKS	COMMENTS
8" OR 12"	1-#4@48" (UNO)	2-#5'S	4'-0"		ALL WALLS UNLESS NOTED OTHERWISE
8"	1-#5@32" (UNO)	2-#5'S	4'-0'		EXTERIOR WALLS
8"	1-#5@24" (UNO)	2-#5'S	4'-0'		EXTERIOR WALLS FOR 1st 8' FROM CORNER
8" OR 12"	1-#5@48"	2-#5'S	4'-0"		CEP INTERIOR WALLS

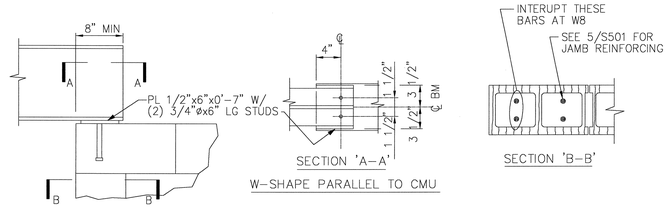

W-SHAPE PARALLEL TO CMU

10 S501|S501 DETAIL

SCALE: 1" = 1'-0"

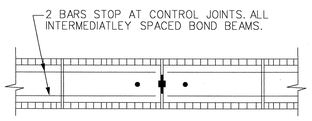

BOND BEAMS ARE TO BE PROVIDED AT 4'-0" O.C. IN ALL WALLS.

NOTE: SEE ARCH DWGS FOR CONTROL JOINT LOCATIONS

BOND BEAMS AT CONTROL JOINTS

11 S501|S501 DETAIL

SCALE: NONE

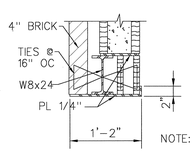

NOTE: FOR BEARING SEE DETAIL 10/S501 SIM.

12 S501|S501 DETAIL

SCALE: 1" = 1'-0"

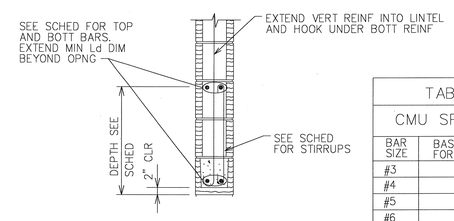

LINTEL BLOCK W/ GROUT

TABLE I CMU SPLICE TABLE	
BAR SIZE	BASIC LAP SPLICE Ld FOR CMU REINFORCING
#3	1'-6"
#4	2'-0"
#5	2'-6"
#6	3'-0"
#7	3'-6"

NOTES:

1. OPENING WIDTH SHALL NOT EXCEED 12'-0"
2. GROUT CELLS TO NOTED LINTEL DEPTH.
3. STIRRUPS SHALL HAVE 180° HOOK ON EACH END.

9 S501|S501 SECTION

SCALE: NONE

DESIGNED BY	CHECKED BY	SIZE F
CATEGORY CODE 721-81-06	CONTRACT NO: DACA21-02-C-0046	DATE:23 APRIL 2003
		PLOT SCALE: ;

CLARK CONSTRUCTION
CLARK DESIGN/BUILD, LLC

SYMBOL	DESCRIPTION	DATE	BY

BASIC COMBAT TRAINEE BARRACKS COMPLEX I
FORT JACKSON, SOUTH CAROLINA
CENTRAL ENERGY PLANT

TYPICAL MASONRY SECTIONS AND DETAILS

PLATE REFERENCE NUMBER:
S-501
SHEET 23

DESIGN FILE: $$FILE NAME$$
$$DATE$$

CONFORMED DRAWINGS 11/21/03