AMENDMENT OF SOLICITATION/MODIFICATION OF CONTRACT

1. CONTRACT ID CODE	PAGE OF PAGES
J	1 | 2

2. AMENDMENT/MODIFICATION NO.	3. EFFECTIVE DATE	4. REQUISITION/PURCHASE REQ. NO.	5. PROJECT NO.(If applicable)
0001	04-Oct-2004	W22W9K-4226-7282	

6. ISSUED BY CODE W912QR

U. S. ARMY ENGINEER DISTRICT, LOUISVILLE
600 DR. MARTIN LUTHER KING, JR. PLACE
ROOM 821
LOUISVILLE KY 40202-2230

7. ADMINISTERED BY (If other than item 6) CODE DACA27

MILITARY/RESERVE TEAM
600 DR. M. L. KING, JR. PL., RM 821
ATTN: DEBRAUH M. LARDNER
LOUISVILLE KY 40202-2230

8. NAME AND ADDRESS OF CONTRACTOR (No., Street, County, State and Zip Code)

CODE FACILITY CODE

X	9A. AMENDMENT OF SOLICITATION NO. W912QR-04-R-0036
X	9B. DATED (SEE ITEM 11) 23-Aug-2004
	10A. MOD. OF CONTRACT/ORDER NO.
	10B. DATED (SEE ITEM 13)

11. THIS ITEM ONLY APPLIES TO AMENDMENTS OF SOLICITATIONS

[X] The above numbered solicitation is amended as set forth in Item 14. The hour and date specified for receipt of Offer [ ] is extended, [X] is not extended.

Offer must acknowledge receipt of this amendment prior to the hour and date specified in the solicitation or as amended by one of the following methods: (a) By completing Items 8 and 15, and returning 1 copies of the amendment; (b) By acknowledging receipt of this amendment on each copy of the offer submitted; or (c) By separate letter or telegram which includes a reference to the solicitation and amendment numbers. FAILURE OF YOUR ACKNOWLEDGMENT TO BE RECEIVED AT THE PLACE DESIGNATED FOR THE RECEIPT OF OFFERS PRIOR TO THE HOUR AND DATE SPECIFIED MAY RESULT IN REJECTION OF YOUR OFFER. If by virtue of this amendment you desire to change an offer already submitted, such change may be made by telegram or letter, provided each telegram or letter makes reference to the solicitation and this amendment, and is received prior to the opening hour and date specified.

12. ACCOUNTING AND APPROPRIATION DATA (If required)

13. THIS ITEM APPLIES ONLY TO MODIFICATIONS OF CONTRACTS/ORDERS.
IT MODIFIES THE CONTRACT/ORDER NO. AS DESCRIBED IN ITEM 14.

[ ] A. THIS CHANGE ORDER IS ISSUED PURSUANT TO: (Specify authority) THE CHANGES SET FORTH IN ITEM 14 ARE MADE IN THE CONTRACT ORDER NO. IN ITEM 10A.

[ ] B. THE ABOVE NUMBERED CONTRACT/ORDER IS MODIFIED TO REFLECT THE ADMINISTRATIVE CHANGES (such as changes in paying office, appropriation date, etc.) SET FORTH IN ITEM 14, PURSUANT TO THE AUTHORITY OF FAR 43.103(B).

[ ] C. THIS SUPPLEMENTAL AGREEMENT IS ENTERED INTO PURSUANT TO AUTHORITY OF:

[ ] D. OTHER (Specify type of modification and authority)

E. IMPORTANT: Contractor [ ] is not, [ ] is required to sign this document and return _____ copies to the issuing office.

14. DESCRIPTION OF AMENDMENT/MODIFICATION (Organized by UCF section headings, including solicitation/contract subject matter where feasible.)

Subject Solicitation No. W912QR-04-R-0036 for Initial Entry Barracks Complex, Increment 1, Ft. Knox, KY, is amended as follows:

See attached for Amendment Information.

Except as provided herein, all terms and conditions of the document referenced in Item 9A or 10A, as heretofore changed, remains unchanged and in full force and effect.

15A. NAME AND TITLE OF SIGNER (Type or print)		16A. NAME AND TITLE OF CONTRACTING OFFICER (Type or print) TEL: EMAIL:	
15B. CONTRACTOR/OFFEROR _____ (Signature of person authorized to sign)	15C. DATE SIGNED	16B. UNITED STATES OF AMERICA BY _____ (Signature of Contracting Officer)	16C. DATE SIGNED 04-Oct-2004

EXCEPTION TO SF 30
APPROVED BY OIRM 11-84

30-105-04

STANDARD FORM 30 (Rev. 10-83)
Prescribed by GSA
FAR (48 CFR) 53.243

SECTION SF 30 BLOCK 14 CONTINUATION PAGE

SUMMARY OF CHANGES

SECTION SF 30 - BLOCK 14 CONTINUATION PAGE

The following have been added by full text:
AMDT. #0001
AMDT. #001

-Section 00115 paragraph 1.2; Price Limitation is revised to $61,500,000.

-Section 00130 paragraph 4.3 – Add the following sentence: "The Technical Proposal will also be evaluated with consideration given to the offeror's understanding of the need to coordinate the Barracks project with the recently awarded and adjacent Dining Facility".

-Section 00800, Wage Rates – Wage Determination #KY030007 w/9 Mods dated 17 September 2004 is added and hereby incorporated into this solicitation.

- RFP Drawing C100 had been revised and is included in dwg, pdf and cal formats.

- Fort Knox Trainee Battalion Dining Facility proposal reference drawings
C201, Site Utility Plan and C301 Storm Drainage Plan
A201, A020, A203 Building Elevations are hereby added to this solicitation.

-The proposal reference drawings are provided from the successful Dining Facility proposal. This IET Barracks proposal and subsequent design resulting from the proposal shall be coordinated with the Dining Facility utility design and storm drainage design. The IET Barracks proposal and subsequent design resulting from the proposal shall reflect not only the historical character of Ft. Knox, but also be compatible with the Dining Facility proposal elevations. Note that these are proposal drawings and may vary slightly as final design is developed. The successful IET Barracks contractor will be required to coordinate with the Dining Facility contractor as the designs progress.

-Structural Drawings were missing from Appendix K – Ft. Jackson Design Files of the original September 07, 2004 issued CD. The following .PDF files are included with this amendment (CADD files were not made available) :
Vol 2, Barracks Drawing Files, Sheets 53-76
Vol 6, CEP Drawing Files, Sheets 18-23

-All other terms and conditions remain the same.

(End of Summary of Changes)

General Decision Number: KY030007 09/17/2004 KY7

Superseded General Decision Number: KY020007

State: Kentucky

Construction Types: Building

Counties: Hardin, Jefferson and Meade Counties in Kentucky.

BUILDING CONSTRUCTION PROJECTS (Does not include single family homes and apartments up to and including 4 stories)

Modification Number	Publication Date
0	06/13/2003
1	10/31/2003
2	12/12/2003
3	03/05/2004
4	03/19/2004
5	05/14/2004
6	06/18/2004
7	07/23/2004
8	08/20/2004
9	09/17/2004

ASBE0051-001 10/01/2003

	Rates	Fringes
Asbestos/Insulator Worker (Includes application of all insulating materials, protective coverings, coatings and finishings to all types of mechanical systems)	$ 21.68	8.24

ASBE0207-014 06/01/2002

	Rates	Fringes
Hazardous Material Handler (Includes preparation, wetting, stripping, removal, scrapping, vacuuming, bagging & disposing of all insulation materials, whether they contain asbestos or not, from mechanical systems)	$ 14.80	5.70

BOIL0040-001 01/01/2004

	Rates	Fringes
Boilermaker	$ 29.40	14.42

BRKY0001-001 06/01/2004

	Rates	Fringes
Bricklayer		
BRICKLAYERS; CAULKERS; CLEANERS; POINTERS & STONE MASONS	$ 21.53	7.20
LAYOUT MAN & SAW MAN	$ 21.78	7.20

REFRACTORY & ACID BRICK.....	$ 22.03	7.20
REFRACTORY; & ACID BRICK....	$ 21.43	6.70

BRKY0001-003 06/01/2003

	Rates	Fringes
Marble Setter, Terrazzo Worker & Tile Setter.....	$ 19.94	4.60
Marble, terrazzo and tile finisher.....	$ 13.64	3.95

CARP0064-002 06/01/2004

	Rates	Fringes
Carpenters:.....	$ 20.00	8.17
Piledriverman.....	$ 20.25	8.17

CARP1031-003 06/01/2004

	Rates	Fringes
Millwright.....	$ 22.90	11.65

---

* ELEC0369-001 06/02/2004

	Rates	Fringes
Electrician.....	$ 26.25	8.89

---

* ELEC0369-002 06/02/2004

	Rates	Fringes
Line Construction		
Cable Splicer.....	$ 26.75	15.5%+3.75
Equipment Operator A: John Henry Rock Drill, D6 (or equivalent) and above, Trackhoe Digger, Cranes (greater than 25 tons and less than 45 tons).....	$ 23.63	15.5%+3.75
Equipment Operator B: Cranes (6-25 tons), Backhoes, Road Tractor, Dozer up to D5, Pressure Digger-Wheeled or Tracked, all Tension Wire Stringing Equipment.....	$ 21.00	15.5%+3.75
Equipment Operator C: Trencher, Vibratory Compactor, Ground Rod Driver, Boom Truck (6 ton or below), Skid Steer Loaders.....	$ 17.06	15.5%+3.75
Groundman.....	$ 19.69	15.5%+3.75
Lineman & Technician.....	$ 26.25	15.5%+3.75

Cranes 45 tons or larger to be paid 100% of journeyman lineman's rate.

ELEV0020-001 10/01/2001

JEFFERSON COUNTY:

	Rates	Fringes
Elevator Mechanic	$ 25.755	7.455+a+b

FOOTNOTES:

a. Seven Paid Holidays: New Year's Day; Memorial Day; Independence Day; Labor Day; Thanksgiving Day; Day after Thanksgiving; & Christmas Day

b. Employer contributes 8% of regular hourly rate to vacation pay credit for employee who has worked in business more than 5 years; 6% for less than 5 years.

ENGI0181-020 06/01/2004

	Rates	Fringes
Power Equipment Operator		
GROUP 1	$ 21.25	9.65
GROUP 2	$ 18.01	9.65
GROUP 3	$ 16.74	9.65

POWER EQUIPMENT OPERATOR CLASSIFICATIONS

GROUP 1 - Auto Patrol; Batcher Plant; Bituminous Paver; Cableway; Central Compressor Plant; Clamshell; Concrete Mixer 1 cu. ft. or over); Concrete Pump; Crane; Crusher Plant; Derrick; Derrick Boat; Ditching & Trenching Machine; Dragline; Dredge Operator; Dredge Engineer; Elevating Grader & Loader; Hoe Type Machine; Hoist (1 Drum when used for stack or chimney construction or repair); Hoisting Engine (2 or more Drums); Locomotive; Motor Scrapper; Carry-All Scoop; Bulldozer; Mechanic; Orangepeel Bucket; Piledriver; Power Blade; Motor Grader; Roller (Bituminous); Scarifier; Shovel; Tractor Shovel; Truck Crane; Winch Truck; Push Dozer; Highlift; Boom Cat; Core Drill; Hopto; Tow or Push Boat; A-Frame Winch Truck; Concrete Paver; Gradeall; Hoist; Hyster; Pumpcrete; Ross Carrier; Boom; Tail Boom; Rotary Drill; Hydro Hammer; Mucking Machine; Rock Spreader (Attached to Equipment); Scoopmobile; Kecal Loader; Tower Crane (French, German & Other Types); Hydrocrane; Backfiller; Gurry; Subgrader; Tunnel Mining Machine, including Moles; Shield or similar types of Tunnel Mining Equipment; & Forklift (Reqardless of Lift Height)

GROUP 2 - Air Compressor (Over 900 CFM); Bituminous Mixer; Joint Sealing Machine; Concrete Mixer (Under 21 cu. ft.); Form Grader; Roller (Rock); Tractor (50 H.P. & Over); Bull Float; Finish Machine; Outboard Motor Boat; Flexplane; Fire person; Boom Type Tamping Machine; Greaser on Grease Facilities Servicing Heavy Equipment; Switchman or Brakeman; Whirley Oiler; Self-Propelled Compactor; Tractair & Road Widening Trencher & Farm Tractor with attachments (Except Backhoe, Highlift & End Loader); Elevator; Hoisting Engineer (1 Drum or Buck Hoist, Firebrick Masonry Excluded); Well Point; Grout Pump; Throttle Valve Person; Tugger; & Electric Vibrator Compactor

GROUP 3 - Bituminous Distributor; Cement Gun; Conveyor; Mud Jack; Paving Joint Machine; Roller (Earth); Tamping Machine; Tractor (Under 50 H.P.); Vibrator; Oiler; Concrete

Saw; Burlap & Curing Machine; Truck Crane Oiler; Hydro Seeder; Power Form Handling Equipment; Deckhand Steersman; & Hydraulic Post Driver

CRANE WITH BOOM 150 FEET & OVER, INCLUDING JIB SHALL RECEIVE $.50 ABOVE GROUP 1

IRON0070-001 10/01/2003

	Rates	Fringes
Ironworkers:		
Structural; Ornamental; Reinforcing; & Precast Concrete Erectors	$ 23.39	11.75

LABO0576-001 07/01/2004

	Rates	Fringes
Laborers:		
GROUP 1	$ 15.12	6.68
GROUP 2	$ 15.32	6.68
GROUP 3	$ 15.52	6.68
GROUP 4	$ 16.12	6.68
GROUP 5	$ 16.62	6.68

GROUP 1 - General; Carpenter Tender; Cement Finisher Tender; Placing of Concrete; Wrecking of Buildings; Hand Digging & Hand Backfilling of Ditches; Clearing of Rights-of-Way & Building Sites; Curing of Concrete; Application Hardener; Handling of Chemically Treated Lumber; Installing of Wood Sheeting & Shoring; Signal Laborer; Concrete Bucket & Masonry Work; Cleaning & Moving of General Purpose Materials; General Cleanup of Scrap & Debris

GROUP 2 - Mason Tender; Side Rail Setter (Metal); Stackman; Fork Lift Operator (Masonry & Plastering Contractors only); Power Driven Georgia Buggy; Chain Saw; Vibrator Operator; Mesh Handler; Power Tools (Air, Diesel, Electric, Gasoline); Wagon Drill; Pipe Layer; Wall Man; Treatment of Exposed Concrete (Chip, Bush Hammer & Rub); Concrete Saw; Gasoline Tamper Machine; Walk Behind Trenching Machine; Burner Man; Joint Maker; Asphalt Raker; & Mobile Sweeper

GROUP 3 - Air Track Driller; Introflax Burning Rod; Gunnite Nozzle Man Operator; Sewer, Tunnel Laborer (Free Air); & Sand Hog or Mucker (Free Air)

GROUP 4 - Holeman Drilled Piers; Augered Caissons; Sand Miner (Tunnel Free Air); Caisson Worker; & Powderman

GROUP 5 - Tunnel Person & Tunnel Miner (Pressure & Free Air); Environmental Worker; Toxic & Hazardous Waste; & Asbestos Removal Free Hanging Scaffold Above 30' receives $.25 Premium

---

PAIN0118-001 05/01/2004

	Rates	Fringes
Painters:		
Abrasive Blaster; Fireproofing; Lead		

Abatement; Spray; &
Waterblasting 4000 PSI and
Above.....$ 18.27 7.02
Brush; Drywall Finisher-
Vinyl Hanger.....$ 17.77 7.02

PAIN0639-002 05/01/2003

	Rates	Fringes
Sign Painter & Erector	$ 17.57	4.55+a+b+c

FOOTNOTES: a. 7 Paid Holidays: New Year's Day; Memorial Day; July 4th; Labor Day; Thanksgiving Day; Christmas Day & 1 Floating Day

b. Vacation Pay: After 1 year's service - 5 days' paid vacation; After 2, but less than 10 years' service - 10 days' paid vacation; After 10, but less than 20 years' service - 15 days' paid vacation; After 20 years' service - 20 days' paid vacation

c. Funeral leave up to 3 days maximum paid leave for death of mother, father, brother, sister, spouse, child, mother-in-law, father-in-law, grandparent & inlaw provided employee attends funeral

---

PAIN1165-004 04/01/2004

	Rates	Fringes
Glazier	$ 22.05	7.30

PLAS0692-028 06/01/2004

	Rates	Fringes
Cement Mason	$ 18.50	7.90

PLUM0107-001 02/01/2004

	Rates	Fringes
Plumber/Pipefitter	$ 27.60	8.52

PLUM0522-001 08/01/2003

	Rates	Fringes
Pipefitter/steamfitter	$ 27.60	8.52

ROOF0147-001 07/01/2004

	Rates	Fringes
Roofers:	$ 18.90	6.41

SHEE0110-003 12/01/2003

HARDIN & JEFFERSON COUNTIES:

	Rates	Fringes
Sheet metal worker	$ 25.55	10.42

SHEE0110-004 12/01/2003

MEADE COUNTY:

	Rates	Fringes
Sheet metal worker	$ 27.30	10.42

TEAM0089-001 06/01/2003

	Rates	Fringes
Truck drivers:		
GROUP 1	$ 17.52	a&b
GROUP 2	$ 17.63	a&b
GROUP 3	$ 17.70	a&b
GROUP 4	$ 17.80	a&b

WORK ON HAZARDOUS OR TOXIC WASTE SITES - $4.00 PREMIUM

FOOTNOTES:

a. Employer contribution of $321.70 per employee per week whose name appears on the payroll and has been employed a minimum of 20 work days within any 90 consecutive day period.

b. Paid vacation of 40 hours to any employee who has been regularly employed on a project for 1 year and who has worked a minimum of 1,200 hours during the year, and 2 weeks' paid vacation to any employee who has completed 3 years' employment on a project and who has worked 1,200 hours since their 2nd anniversary date.

TRUCK DRIVER CLASSIFICATIONS

GROUP 1 - 3 Tons & Under; Greaser; Tire Changer; & Mechanic Tender

GROUP 2 - Over 3 Tons; Semi-Trailer or Pole Trailer; Dump Tandem Axles; Farm Tractor (When used to pull building material & equipment)

GROUP 3 - Concrete Mixer (Hauling on jobsites); & Truck Mechanic

GROUP 4 - Euclids & Other Heavy Moving Equipment; Lowboy; Winch, A-Frame & Monorail Truck (To transport building materials)

WELDERS - Receive rate prescribed for craft performing operation to which welding is incidental.

==========

Unlisted classifications needed for work not included within the scope of the classifications listed may be added after award only as provided in the labor standards contract clauses (29CFR 5.5 (a) (1) (ii)).

In the listing above, the "SU" designation means that rates listed under the identifier do not reflect collectively

bargained wage and fringe benefit rates. Other designations indicate unions whose rates have been determined to be prevailing.

WAGE DETERMINATION APPEALS PROCESS

1.) Has there been an initial decision in the matter? This can be:

* an existing published wage determination
* a survey underlying a wage determination
* a Wage and Hour Division letter setting forth a position on a wage determination matter
* a conformance (additional classification and rate) ruling

On survey related matters, initial contact, including requests for summaries of surveys, should be with the Wage and Hour Regional Office for the area in which the survey was conducted because those Regional Offices have responsibility for the Davis-Bacon survey program. If the response from this initial contact is not satisfactory, then the process described in 2.) and 3.) should be followed.

With regard to any other matter not yet ripe for the formal process described here, initial contact should be with the Branch of Construction Wage Determinations. Write to:

Branch of Construction Wage Determinations

Wage and Hour Division

U.S. Department of Labor

200 Constitution Avenue, N.W.

Washington, DC 20210

2.) If the answer to the question in 1.) is yes, then an interested party (those affected by the action) can request review and reconsideration from the Wage and Hour Administrator (See 29 CFR Part 1.8 and 29 CFR Part 7). Write to:

Wage and Hour Administrator

U.S. Department of Labor

200 Constitution Avenue, N.W.

Washington, DC 20210

The request should be accompanied by a full statement of the interested party's position and by any information (wage payment data, project description, area practice material, etc.) that the requestor considers relevant to the issue.

3.) If the decision of the Administrator is not favorable, an interested party may appeal directly to the Administrative Review Board (formerly the Wage Appeals Board). Write to:

Administrative Review Board

U.S. Department of Labor

200 Constitution Avenue, N.W.

Washington, DC 20210

4.) All decisions by the Administrative Review Board are final.

==========

END OF GENERAL DECISION

NOTES:

1. THIS SURVEY OF EXISTING CONDITIONS FOUND THAT MANY STORMWATER UTILITY STRUCTURES (SUCH AS MANHOLES, CATCH BASINS AND CULVERTS) THAT SHOW ON THE POST'S GIS SYSTEM (SHEET C2.02) WERE APPARENTLY BURIED DURING DEMOLITION OF THE OLD BARRACKS BUILDINGS. THE CONNECTIONS OF UTILITIES SHOWN ON THIS PLAN ARE THE STRUCTURES AND PORTIONS OF SYSTEM FOUND. THE CONTRACTOR SHALL VERIFY EXISTING CONDITIONS AND DESIGN ACCORDINGLY FOR PROPER STORMWATER MANAGEMENT.
2. DEMOLITION IN THE AREA EAST OF NO. DELAWARE ST. WAS ON-GOING AT THE TIME OF SURVEY OF THE SITE. THE CONTRACTOR SHALL VERIFY AND/OR COORDINATE THE DEMOLITION OF THE REMAINING BUILDINGS WITHIN THE PROJECT LIMITS WITH FT. KNOX PRIOR TO BEGINNING CONSTRUCTION.

US Army Corps of Engineers
Louisville District

Symbol	Revisions Description	Date	Appr.
1	AMENDMENT 001 - REVISE SHEET TO INCLUDE ADDITIONAL AREA		

Designed by: D. BEHNFELDT | Date: 25 AUG 2004 | Rev.
Dwn by: C. BRINKMAN | Ckd by: L. CAN | Design file no. | Drawing code:
Reviewed by: A. HAUTMAN | File name: KNOXBRKS-100XX.DGN
Submitted by: Chief, Arch. Branch | Plot date: 25 AUG 2004 | Plot scale: 1" = 200'-0"

U.S. ARMY ENGINEERING DIVISION
CORPS OF ENGINEERS
LOUISVILLE, KENTUCKY

K|Z|F|BWSC a joint venture
657 EDEN PARK DRIVE
CINCINNATI, OHIO 45202
PHONE (513) 621-6211 FAX (513) 621-6530

FORT KNOX, KENTUCKY
INITIAL ENTRY TRAINING
BARRACKS COMPLEX 1
FY05, 006
SOLICITATION # W912QR-04-R-0036
EXISTING SITE PLAN

Sheet reference number:
C100
Sheet 03 of 12

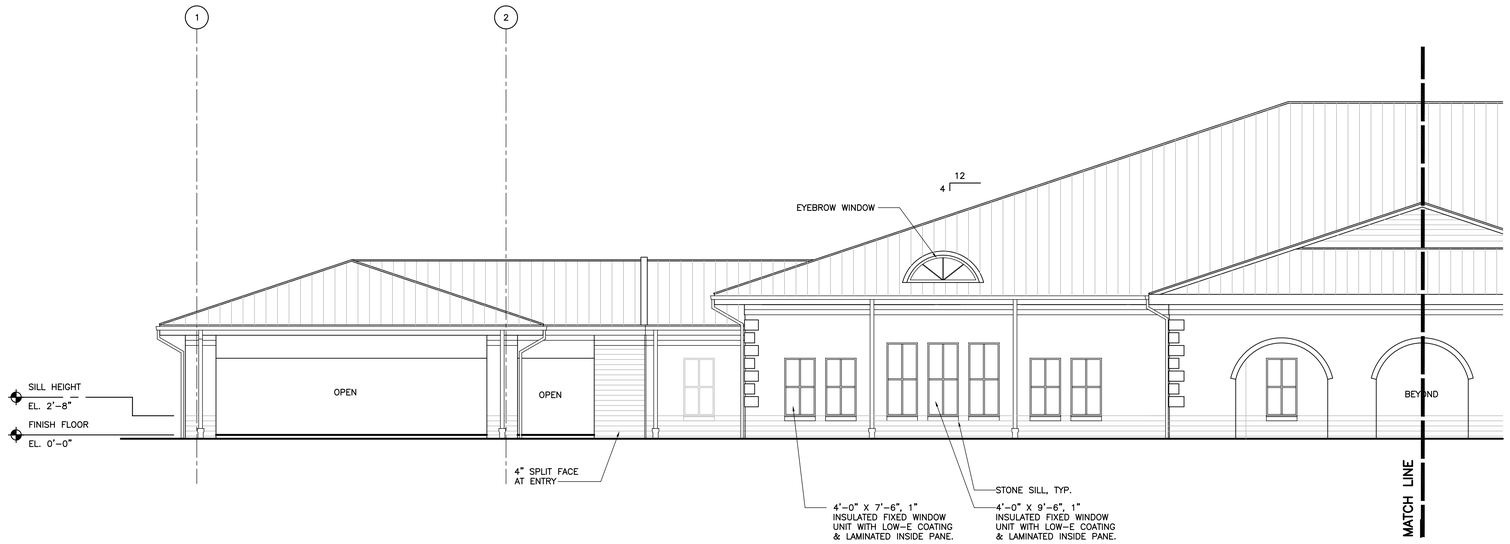

1 / A010 | A201 — PARTIAL NORTH ELEVATION

SCALE: 1/8" = 1'-0"

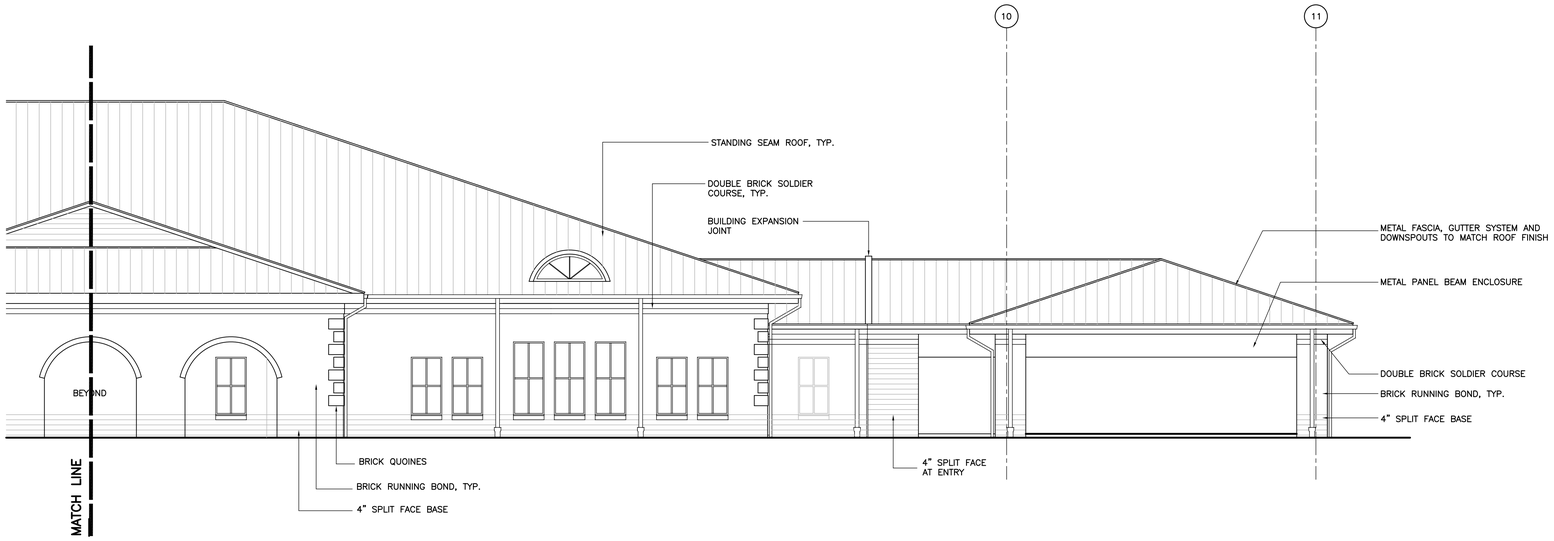

2 / A010 | A201 — PARTIAL NORTH ELEVATION

SCALE: 1/8" = 1'-0"

GRAPHIC SCALE

0 4' 8' 16'

SCALE: 1/8" = 1'-0"

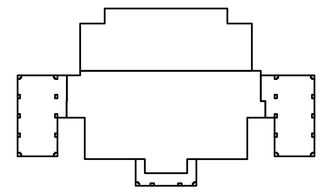

1 2

KEYPLAN

SCALE: N.T.S.

US ARMY CORPS OF ENGINEERS
LOUISVILLE DISTRICT

SYMBOL	DESCRIPTION	DATE	BY

DESIGNED BY EJS | CHECKED BY JMB | SIZE
CATEGORY CODE
SOLICITATION NO.: SPB W912QR-04-R-0013
DATE: 02 JULY 2004
PLOT SCALE: AS NOTED

MESSER CONSTRUCTION CO.
11836 Caputo Way, Louisville, KY 40299
Phone (502) 261-9700
Fax (502) 261-9705

BURGESS & NIPLE
312 PLUM ST., 12TH FLOOR, CINCINNATI, OHIO 45202
PHONE: (513) 579-0050
FAX: (513) 579-0321

FORT KNOX, KENTUCKY
NO. SPB W912QR-04-R-0013
TRAINEE BATTALION
DINING FACILITY

ELEVATIONS

SHEET REFERENCE NUMBER:

A201

SHEET 14 OF 22

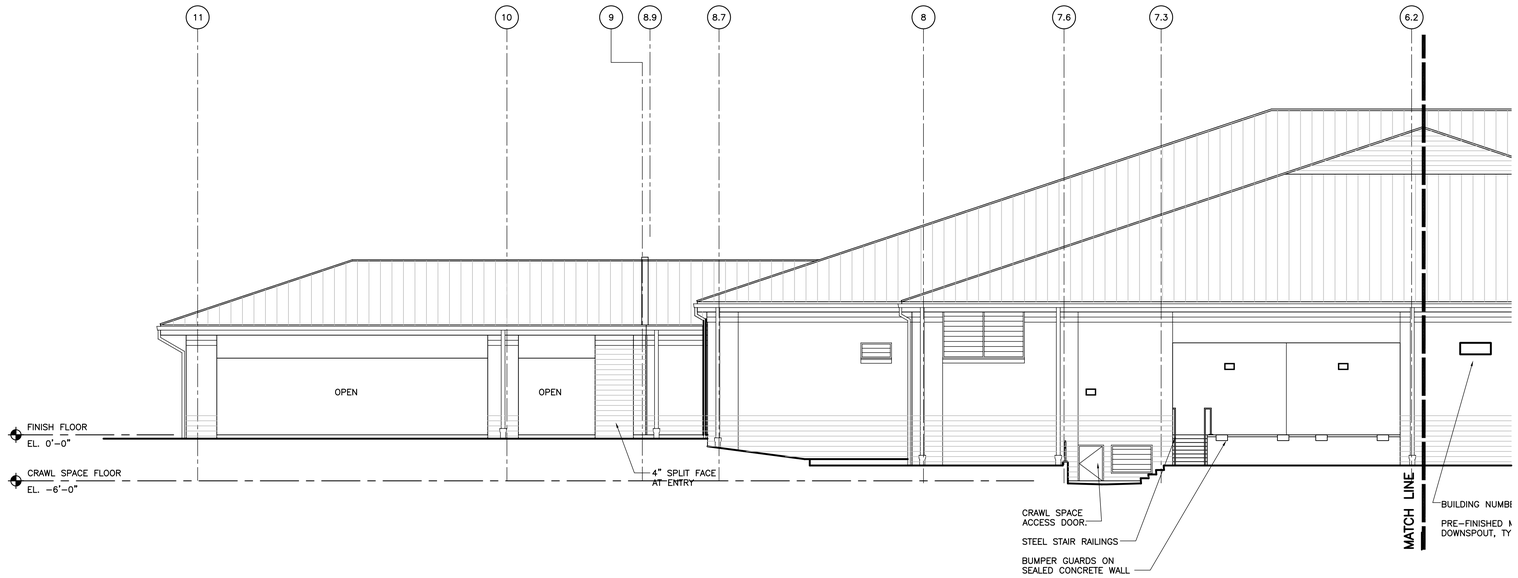

1 / A010 | A202 — PARTIAL SOUTH ELEVATION

SCALE: 1/8" = 1'-0"

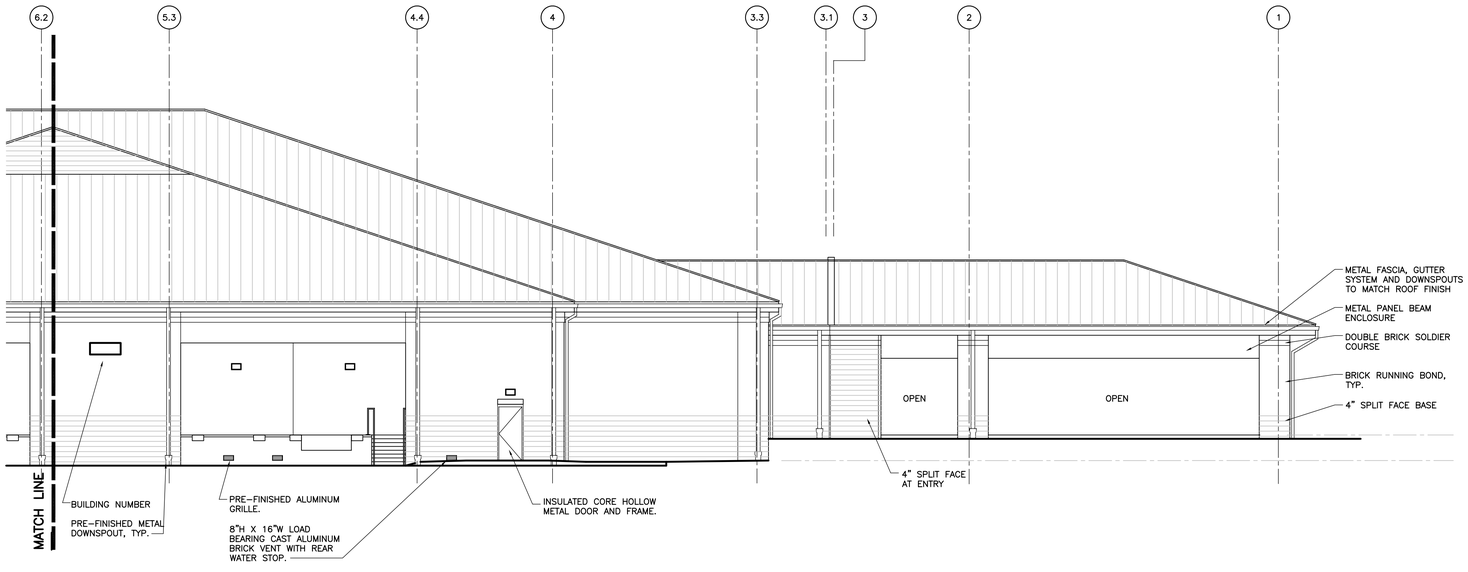

2 / A010 | A202 — PARTIAL SOUTH ELEVATION

SCALE: 1/8" = 1'-0"

GRAPHIC SCALE

0 4' 8' 16'

SCALE: 1/16" = 1'-0"

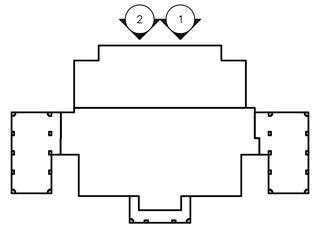

KEYPLAN

SCALE: N.T.S.

N

US ARMY CORPS
OF ENGINEERS
LOUISVILLE DISTRICT

SYMBOL	DESCRIPTION	DATE	BY

DESIGNED BY EJS | DRAWN BY JMB | CHECKED BY JMB | SIZE

CATEGORY CODE

SOLICITATION NO.: SFB W912QR-04-R-0013

DATE: 02 JULY 2004

PLOT SCALE: AS NOTED

MESSER
CONSTRUCTION CO.
11836 Coppel Way, Louisville, KY 40299
Phone (502) 261-9700
Fax (502) 261-9705

BURGESS & NIPLE
312 PLUM ST., 12TH FLOOR, CINCINNATI, OHIO 45202
PH: (513) 579-0500
FAX: (513) 579-0321

FORT KNOX, KENTUCKY
NO. SFB W912QR-04-R-0013
TRAINEE BATTALION
DINING FACILITY

ELEVATIONS

SHEET REFERENCE NUMBER:

A202

SHEET 15 OF 22

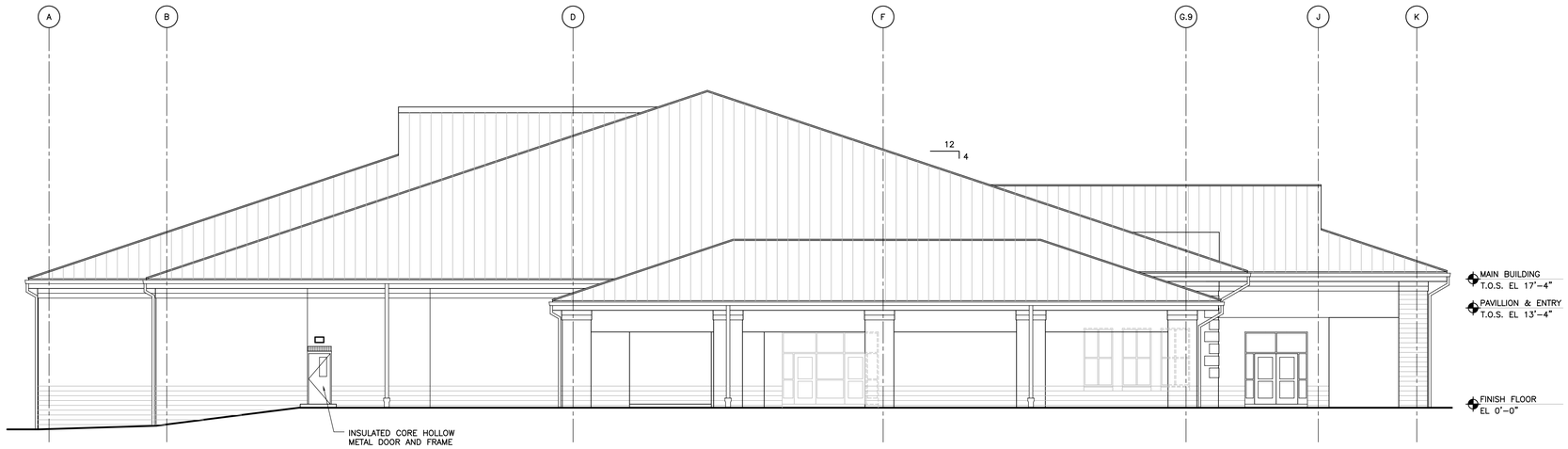

1 / A010 | A203 — EAST ELEVATION

SCALE: 1/8" = 1'-0"

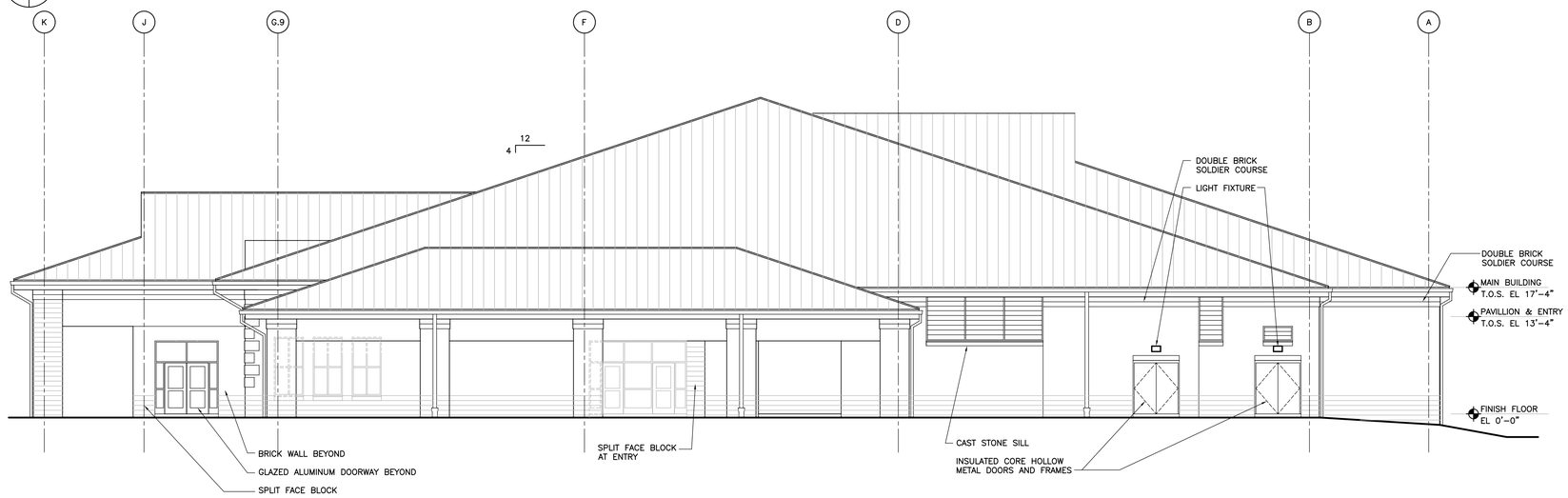

2 / A010 | A203 — WEST ELEVATION

SCALE: 1/8" = 1'-0"

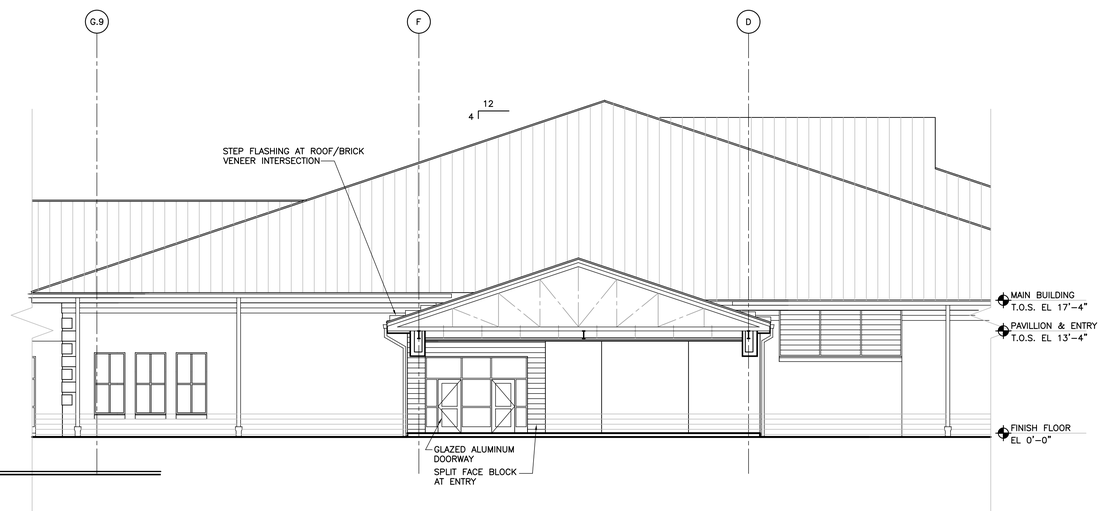

3 / A010 | A203 — ENTRY ELEVATION

SCALE: 1/8" = 1'-0"

GRAPHIC SCALE

0 4' 8' 16'

SCALE: 1/8" = 1'-0"

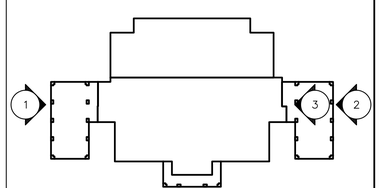

KEYPLAN

SCALE: N.T.S.

US ARMY CORPS
OF ENGINEERS
LOUISVILLE DISTRICT

SYMBOL	DESCRIPTION	DATE	BY

DESIGNED BY: EJS | CHECKED BY: JMB | SIZE
CATEGORY CODE
SOLICITATION NO: W912QR-04-R-0013
DATE: 02 JULY 2004
PLOT SCALE: AS NOTED

MESSER CONSTRUCTION CO.
11838 Gagel Way, Louisville, KY 40299
Phone (502) 261-9700
Fax (502) 261-9705

BURGESS & NIPLE
312 PLUM ST., 12TH FLOOR, CINCINNATI, OHIO 45202
PH: (513) 579-0043
FAX: (513) 579-0021

FORT KNOX, KENTUCKY
NO. SFB W912QR-04-R-0013
TRAINEE BATTALION
DINING FACILITY

ELEVATIONS

SHEET REFERENCE NUMBER:

A203

SHEET 16 OF 22

CODED NOTES:

1. EXISTING CATCH BASIN TO BE REMOVED
2. EXISTING STORM PIPE TO BE REMOVED
3. EXISTING 15 L.F. OF 12" STORM PIPE TO BE REMOVED
4. EXISTING 24" STORM PIPE TO BE REMOVED
5. EXISTING 36" STORM PIPE TO BE REMOVED
6. EXISTING 470 L.F. OF 10" SANITARY PIPE TO BE REMOVED
7. NEW CATCH BASIN
8. NEW STORM MANHOLE
9. NEW 12" RCP STORM PIPE
10. NEW 24" RCP STORM PIPE
11. NEW 36" RCP STORM PIPE
12. NEW HEADWALL
13. NEW PAVED GUTTER
14. NEW SANITARY CLEANOUT
15. NEW SANITARY MANHOLE
16. NEW 6" PVC SANITARY PIPE
17. NEW 10" PVC SANITARY PIPE
18. NEW 230 L.F. OF 3" GAS SERVICE, TAP EXISTING LINE AND STUB FOR FUTURE USE
19. NEW 452 L.F. WATER SERVICE, TAP EXISTING LINE
20. EXISTING 8" SANITARY LINE TO BE REMOVED
21. EXISTING 10" SANITARY LINE TO BE REMOVED
22. EXISTING 550 L.F. OF 6" WATER LINE TO BE REMOVED
23. DOMESTIC WATER LINE
24. FIRE MAIN
25. WATER METER LOCATION
26. GAS METER LOCATION

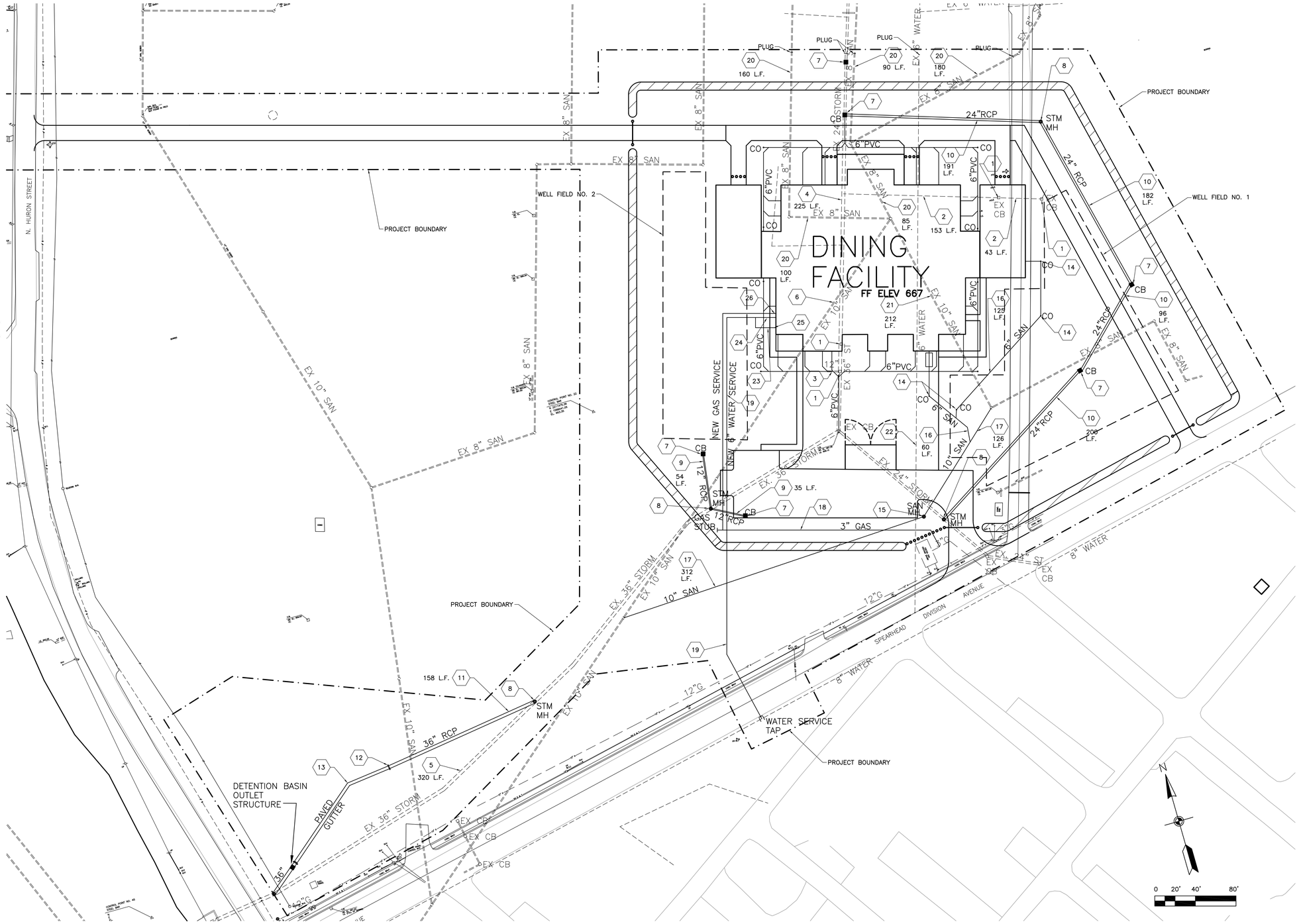

US ARMY CORPS OF ENGINEERS LOUISVILLE DISTRICT

SYMBOL	DESCRIPTION	DATE	BY

DESIGNED BY SS/JC | CHECKED BY SS | SIZE
CATEGORY CODE
SOLICITATION NO: SFB W912QR-04-R-0013
DATE: 02 JULY 2004
PLOT SCALE: 1" = 40'

MESSER CONSTRUCTION CO.
11836 Capital Way, Louisville, KY 40299
Phone (502) 261-9775
Fax (502) 261-9705

BURGESS & NIPLE
312 PLUM ST., 12TH FLOOR, CINCINNATI, OHIO 45202
PH: (513) 579-0042
FAX: (513) 579-0321

FORT KNOX, KENTUCKY
NO. SFB W912QR-04-R-0013
TRAINEE BATTALION
DINING FACILITY

SITE UTILITY PLAN

SHEET REFERENCE NUMBER:
C201
SHEET 3 OF 22

CODED NOTES:

1. EXISTING CATCH BASIN TO BE REMOVED
2. EXISTING STORM PIPE TO BE REMOVED
3. EXISTING 15 L.F. OF 12" STORM PIPE TO BE REMOVED
4. EXISTING 24" STORM PIPE TO BE REMOVED
5. EXISTING 36" STORM PIPE TO BE REMOVED
6. EXISTING 470 L.F. OF 10" SANITARY PIPE TO BE REMOVED
7. NEW CATCH BASIN
8. NEW STORM MANHOLE
9. NEW 12" RCP STORM PIPE
10. NEW 24" RCP STORM PIPE
11. NEW 36" RCP STORM PIPE
12. NEW HEADWALL
13. NEW PAVED GUTTER
14. NEW SANITARY CLEANOUT
15. NEW SANITARY MANHOLE
16. NEW 6" PVC SANITARY PIPE
17. NEW 10" PVC SANITARY PIPE
18. NEW 230 L.F. OF 3" GAS SERVICE, TAP EXISTING LINE AND STUB FOR FUTURE USE
19. NEW 452 L.F. WATER SERVICE, TAP EXISTING LINE
20. EXISTING 8" SANITARY LINE TO BE REMOVED
21. EXISTING 10" SANITARY LINE TO BE REMOVED
22. EXISTING 550 L.F. OF 6" WATER LINE TO BE REMOVED
23. DOMESTIC WATER LINE
24. FIRE MAIN
25. WATER METER LOCATION
26. GAS METER LOCATION
27. 6" PVC STORM FOR DOWNSPOUTS
28. NEW STORM CLEANOUT

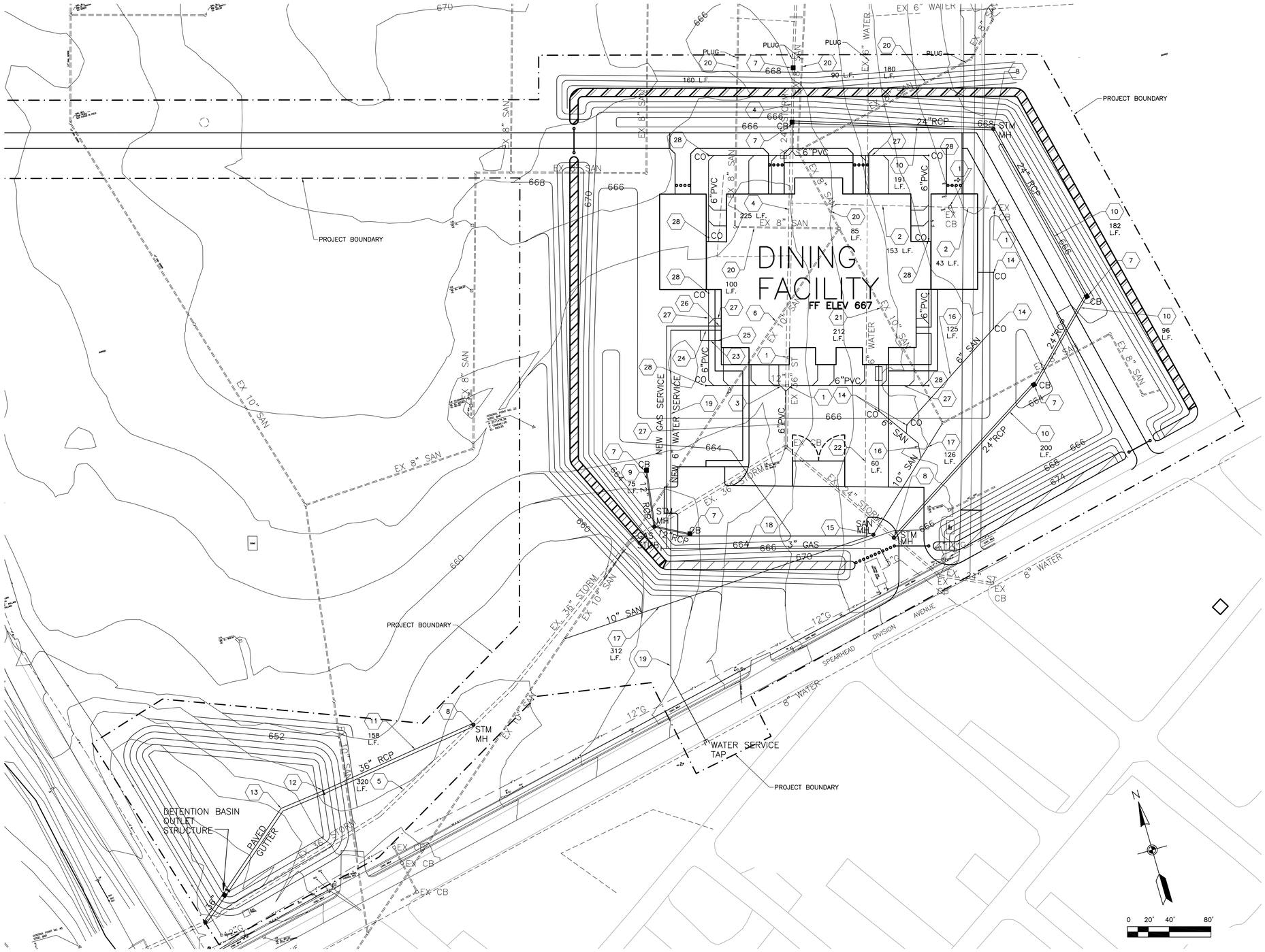

US ARMY CORPS OF ENGINEERS
LOUISVILLE DISTRICT

SYMBOL	DESCRIPTION	DATE	BY

DESIGNED BY: SS/JC
CHECKED BY: SS
SIZE:
CATEGORY CODE:
SOLICITATION NO.: SPB W912QR-04-R-0013
DATE: 02 JULY 2004
PLOT SCALE: 1" = 40'

MESSER CONSTRUCTION CO.
11838 Capitol Way, Louisville, KY 40299
Phone (502) 261-9700
Fax (502) 261-9705

BURGESS & NIPLE
312 PLUM ST., 12TH FLOOR, CINCINNATI, OHIO 45202
PH: (513) 579-0080
FAX: (513) 579-0321

FORT KNOX, KENTUCKY
NO. SPB W912QR-04-R-0013
TRAINEE BATTALION
DINING FACILITY

STORM DRAINAGE PLAN

SHEET REFERENCE NUMBER:
C301
SHEET 4 OF 22

P:\PROJ\MESSER\2004\F460 MESSER FT KNOX DINING HALL\PHASE II\RFP RESPONSE\DGN\C301.DWG 6-29-04 6:21:50 p.m. SHADWE

Amendment 0001

Appendix K = Fort Jackson Design Files
Vol. 2 Barracks Drawings Files

GENERAL NOTES

1. REFERENCE ELEVATION - COORDINATE WITH CIVIL SHEETS FOR FINISH FLOOR ELEVATIONS.

2. ALL INTERIOR FLOOR SLABS-ON-GRADE SHALL BE PLACED OVER A 6 MIL VAPOR BARRIER WHICH IS OVER A 4" CRUSHED STONE FILL.

3. THE DRAWINGS SHOWN AS THE STRUCTURAL "S" SHEETS ARE APPLICABLE FOR (1) COMPLETE BUILDING ONLY. REFER TO CIVIL SHEETS AND PROJECT SCOPE FOR TOTAL NUMBER OF BUILDINGS REQUIRED.

4. STRUCTURAL DRAWINGS ARE INTENDED TO BE USED IN CONJUNCTION WITH ENTIRE SET OF CONTRACT DRAWINGS. CONTRACTOR IS RESPONSIBLE FOR COORDINATING ALL RELATED ITEMS IN THE WORK.

5. THE CONTRACTOR SHALL VERIFY DIMENSIONS AND CONDITIONS PRIOR TO CONSTRUCTION AND NOTIFY THE CONTRACTING OFFICER'S REPRESENTATIVE OF ANY DISCREPANCIES, INCONSISTENCIES OR DIFFICULTIES AFFECTING THE WORK BEFORE PROCEEDING.

6. SUBSTITUTION OF EXPANSION ANCHORS FOR EMBEDDED ANCHORS SHOWN ON THE DRAWINGS WILL NOT BE PERMITTED.

7. NO PIPES, SLEEVES, OR ETC. SHALL PASS THROUGH BEAMS OR COLUMNS UNLESS INDICATED ON PLAN.

8. CONTRACTOR SHALL HAVE GEOTECHNICAL ENGINEER REVIEW SLAB SUBGRADES AND FOOTING EXCAVATIONS PRIOR TO POURING CONCRETE . REPORT No. 02191074 BY SCHNABEL ENGINEERING ASSOCIATES INDICATED POSSIBLE PRESENCE OF EXPANSIVE SOILS. OVER-EXCAVATION MAY BE NECESSARY.

DESIGNER NOTES

1. FOUNDATION INFORMATION:
   A. MAXIMUM NET ALLOWABLE SOIL BEARING PRESSURE:
      (1) CONTINUOUS FOOTINGS: 3000 PSF
      (2) SPREAD FOOTINGS: 3000 PSF

2. STRUCTURE CLASSIFICATION PER ASCE 7-95:
   CATEGORY II

3. DESIGN ROOF LIVE LOAD (CONSTRUCTION AND MAINTENANCE): 20 PSF

4. WIND LOADS: WIND LOADS ARE COMPUTED IN ACCORDANCE WITH ASCE 7-98 USING THE FOLLOWING FACTORS:
   A. BASIC 50-YEAR WIND SPEED: 90 MPH
   B. SITE CLASS: CATEGORY II
   C. EXPOSURE FACTOR: EXPOSURE C SITING
   D. REFER TO WIND UPLIFT DIAGRAM ON SHEET S002

5. SEISMIC LOADS: SEISMIC LOADS ARE COMPUTED IN ACCORDANCE WITH TI 809-04
   A. SEISMIC USE GROUP: I
   B. PERFORMANCE OBJECTIVE: 1A. (LIFE SAFETY)
   C. SITE CLASSIFICATION: D
   D. DESIGN SPECTRAL RESPONSE ACCELERATIONS, Ss=0.59 & S1=0.19.
   E. SEISMIC DESIGN CATEGORY: D

STRUCTURAL STEEL

1, STRUCTURAL STEEL SHALL MEET THE LATEST AISC "SPECIFICATION FOR STRUCTURAL STEEL BUILDINGS."
2. STEEL FRAMING MEMBERS SHALL ONLY BE SPLICED AT LOCATIONS SHOWN ON THE DESIGN DRAWINGS OR SHOWN ON AND APPROVED ON THE SHOP DRAWINGS.
3. STRUCTURAL STEEL SHOP DRAWINGS SHALL BE PREPARED UNDER THE SUPERVISION OF A LICENSED PROFESSIONAL ENGINEER.
4. ALL STRUCTURAL STEEL SHALL MEET ASTM A572 GRADE 50 EXCEPT STRUCTURAL TUBING SHALL MEET ASTM A500, GRADE B, AND STRUCTURAL PIPING SHALL MEET ASTM A53, GRADE B.
5. ALL BEAM AND COLUMN CONNECTIONS SHALL BE MADE WITH A325 OR A490 BOLTS. CONNECTIONS SHALL BE DESIGNED AS BEARING (TYPE N) CONNECTIONS, UNLESS NOTED OTHERWISE.
   CONTRACTORS OPTION FOR BUILDING BRACE CONNECTIONS TO HAVE OVERSIZED HOLES AND BE SLIP CRITICAL. DESIGN CONNECTION AS FRICTION TYPE. PROVIDE LOAD INDICATOR BOLTS. DO NOT PAINT SURFACES OF STEEL IN CONTACT WITH EACH OTHER.
6. ALL ANCHOR BOLTS SHALL BE A307, OR A36 AND SHALL HAVE CUT THREADS.
7. ALL BOLTS SET IN CONCRETE SHALL BE FURNISHED WITH DOUBLE NUTS AND SHALL BE SET WITH A TEMPLATE.
8. PROVIDE ANGLE FRAME TO SUPPORT METAL DECK AT ALL OPENINGS GREATER THAN 9" x 9".
9. WELDING SHALL CONFORM TO AWS D1.1, "STRUCTURAL WELDING CODE". NO UNAUTHORIZED WELDS WILL BE ACCEPTED.
10. E70XX ELECTRODES SHALL BE USED FOR ALL WELDING.
11. ----- NOT USED -----
12. UNLESS OTHERWISE SHOWN, ALL BEAM CONNECTIONS SHALL BE STANDARD FRAMED OR SEATED CONNECTIONS AS SHOWN IN PART 4 OF THE AISC MANUAL OF STEEL CONSTRUCTION. UNLESS GREATER REACTIONS ARE INDICATED ON THE PLANS, CONNECTIONS SHALL DEVELOP AT LEAST ONE-HALF OF THE TOTAL UNIFORM LOAD CAPACITY TABULATED IN THE TABLES OF THE MANUAL FOR THE GIVEN SHAPE AND SPAN OF THE BEAM IN QUESTION, AND 70% OF THE TOTAL UNIFORM LOAD CAPACITY FOR COMPOSIT BEAMS. IN NO CASE, HOWEVER, SHALL THE LENGTH OF THE FRAMED CONNECTIONS BE LESS THAN ONE-HALF OF THE "T" DISTANCE OF THE BEAM WEB.
13. GUSSET PLATES SHALL BE 3/8" THICK MINIMUM.
14. WHERE PRACTICAL, UNLESS SHOWN DIFFERENTLY ON DRAWINGS, ALL BRACING CONNECTIONS SHALL BE DESIGNED AND BRACING CONNECTIONS SHALL BE DESIGNED AND DETAILED SO THAT ALL FORCE COMPONENTS CAN BE DELIVERED DIRECTLY TO THE CENTERLINE OF INTERSECTING MEMBERS. WHERE THIS IS NOT DONE, CONNECTIONS SHALL BE DESIGNED TO ACCOUNT FOR RESULTING ECCENTRICITIES.
15. (+) INDICATES TENSION IN MEMBER. (-) INDICATES COMPRESSION IN MEMBER.
16. ALL ELEVATIONS ARE REFERENCED FROM FINISHED GROUND FLOOR DATUM ELEVATION 0'-0". SEE CIVIL DRAWINGS FOR BUILDING ORENTATIONS AND GROUND FLOOR ELEVATIONS.
17. CONTRACTOR TO PROVIDE ADEQUATE BRACING FOR STRUCTURE SO THAT IT WILL BE STABLE DURING ALL STAGES OF CONSTRUCTION. THE STRUCTURE AND FOUNDATIONS ARE DESIGNED FOR A COMPLETED CONDITION ONLY AND THEREFORE REQUIRES ADDITIONAL SUPPORT TO MAINTAIN STABILITY BEFORE COMPLETION.
18. BEAM FRAMING CONNECTIONS MAY BE DESIGNED AS SINGLE SIDED CLIPS. GIRDER CONNECTIONS FRAMING INTO COLUMNS SHALL BE DOUBLE CLIPS.

COLD-FORMED STRUCTURAL METAL FRAMING

1. ALL COLD-FORMED STRUCTURAL METAL FRAMING SHALL HAVE A MINIMUM PROTECTIVE COATING EQUAL TO G-60 GALVANIZED FINISH. APPLY ZINC-RICH PAINT TO ALL AREAS WHERE FINISH IS DAMAGED DUE TO WELDING.
2. ALL STEEL FOR COLD-FORMED STRUCTURAL METAL FRAMING SHALL CONFORM TO ONE OF THE FOLLOWING ASTM STANDARDS: ASTM A653, A875, A792, OR A463.
3. ALL PRODUCTS SHALL BE FORMED FROM STEEL WITH A MINIMUM YIELD OF 33 ksi.
4. ALL STUD AND JOIST SECTIONS SHALL BE "C" TYPE SECTIONS WITH MINIMUM 1½" FLANGES AND A MINIMUM ½" RETURN UNLESS NOTED OTHERWISE.

COLD-FORMED STRUCTURAL METAL FRAMING CONTINUED

5. ALL MEMBERS SHALL BE OF DEPTH AND GAGE AS INDICATED ON PLAN AND SECTIONS.
6. TRACK SECTIONS SHALL MEET OR EXCEED GAGE OF STUD MEMBERS, UNLESS OTHERWISE NOTED.
7. STRUCTURAL FRAMING MEMBERS SHALL CONFORM TO ASTM C955 AND HAVE ENGINEERING PROPERTIES CALCULATED IN ACCORDANCE WITH AISI "SPECIFICATION FOR THE DESIGN OF COLD-FORMED STEEL STRUCTURAL MEMBERS".
8. ALL FRAMING COMPONENTS SHALL BE CUT SQUARELY FOR ATTACHMENT TO PERPENDICULAR MEMBERS.
9. PROVIDE WEB STIFFENERS, CONNECTION ANGLES, AND MISCELLANEOUS HARDWARE REQUIRED TO COMPLETE ALL CONNECTIONS.
10. PROVIDE WALL STUD BRIDGING SPACED AT 48" MAXIMUM ON CENTERS IN EXTERIOR WALLS.
11. PROVIDE DEFLECTION TRACK AT THE TOP OF ALL NON-LOAD BEARING STUD WALLS WHERE THE TOP OF WALL ABUTS THE BOTTOM OF THE STRUCTURE.
12. FASTENING OF FRAMING COMPONENTS SHALL BE WITH SELF-TAPPING SCREWS OR WELDING OF SUFFICIENT SIZE TO INSURE THE STRENGTH OF THE CONNECTION. WELDS SHALL BE PERFORMED BY OPERATORS QUALIFIED IN ACCORDANCE WITH SECTION 6.0 OF THE AMERICAN WELDING SOCIETY'S "STRUCTURAL WELDING CODE - SHEET METAL" (AWS D1.3-8).
13. ATTACH STUDS TO TRACK WITH A MINIMUM OF ONE SCREW PER STUD FLANGE, UNLESS OTHERWISE NOTED, E.G. DEFLECTION TRACKS.
14. ANCHOR BASE TRACK TO FLOOR/FOUNDATION TO RESIST A MINIMUM OF 360 PLF LATERAL SHEAR FORCE.
15. ROOF TRUSSES SHALL BE ENGINEERED BY COLD FORMED SUPPLIER'S ENGINEER.
16. LOADS TO TRUSSES SHOWN IN DESIGN CRITERIA AND OTHERWISE SHOWN ON DRAWINGS SHALL BE TRANSFERRED TO THE STRUCTURAL STEEL.
17. THE TOP CHORD OF THE ROOF TRUSSES SHALL BE 16 GA. MINIMUM METAL THICKNESS.

CONSTRUCTION

1. CONTRACTOR SHALL DESIGN, PROVIDE, AND MAINTAIN TEMPORARY BRACING, SHORING, GUYING, ETC. AND OTHER METHODS AS REQUIRED TO PREVENT EXCESSIVE LOADING AND TO STABILIZE STRUCTURAL ELEMENTS DURING CONSTRUCTION. THESE METHODS SHALL REMAIN IN PLACE UNTIL ALL MEMBERS AND FINAL CONNECTIONS HAVE BEEN COMPLETED.

CAST-IN-PLACE CONCRETE

1. ALL CONCRETE SHALL HAVE MINIMUM COMPRESSIVE STRENGTHS AT 28 DAYS AS FOLLOWS:
   ELEVATED FLOOR SLABS 4000 PSI
   ALL OTHERS 3000 PSI
2. CONCRETE FOR ELEVATED SLABS SHALL CONTAIN LIGHTWEIGHT AGGREGATE TO ACHIEVE A DENSITY OF 115 PCF.
3. ALL AGGREGATE FOR NORMAL WEIGHT CONCRETE SHALL MEET ASTM C33.
4. ALL AGGREGATE FOR STRUCTURAL LIGHTWEIGHT CONCRETE SHALL BE ASTM C330.
5. EXTERIOR EXPOSED CONCRETE SHALL HAVE FROM 4 TO 7% ENTRAINED AIR.
6. CONCRETE SHALL BE IN STRICT CONFORMANCE WITH THE CURRENT "ACI MANUAL OF CONCRETE PRACTICE".
7. NO ALUMINUM SHALL BE PLACED IN CONCRETE.
8. SLABS ON EARTH SHALL BE 4" THICK WITH 6x6-W2.0xW2.0 WELDED WIRE FABRIC UNLESS OTHERWISE NOTED.
9. (NOT USED)
10. CONTRACTION JOINTS OR CONSTRUCTION JOINTS IN SLABS ON GRADE SHALL BE SPACED TO DIVIDE THE SLAB INTO PANELS NOT TO EXCEED 250 SQUARE FEET UNLESS NOTED OTHERWISE, THE LONGER DIMENSION OF EACH PANEL SHALL NOT EXCEED THE SHORTER DIMENSION BY MORE THAN 20 PERCENT.
11. PROVIDE CONCRETE BASES FOR MECHANICAL EQUIPMENT. ALL SHALL BE 4 INCHES THICK ON TOP OF FLOOR SLABS ON GRADE WITH WELDED WIRE FABRIC, UNLESS OTHERWISE NOTED (SEE TYPICAL DETAIL ON DRAWING S302).
12. NO ELECTRICAL CONDUIT SHALL BE CAST IN A STRUCTURAL CONCRETE SYSTEM WITHOUT ARCHITECT/ENGINEER APPROVAL.

REINFORCING STEEL

1. ALL MESH SHALL MEET ASTM A-185. LAP A MINIMUM OF 6 INCHES.
2. FURNISH MESH FOR SLABS ON METAL DECK IN FLAT SHEETS.
3. ALL REINFORCING SHALL MEET ASTM A615 GRADE 60.
4. UNLESS NOTED OTHERWISE, THE LAP AND EMBEDMENT LENGTHS SHALL BE IN ACCORDANCE WITH THE LENGTHS SHOWN IN THE TABLE.
5. REINFORCING SHALL BE DETAILED ACCORDING TO THE ACI DETAILING MANUAL UNDER THE SUPERVISION OF A LICENSED STRUCTURAL ENGINEER.
6. PROVIDE CORNER LAP BARS TO MATCH IN SIZE AND SPACING OF ALL HORIZONTAL BARS.

TYPICAL CONCRETE COVER FOR REINFORCING STEEL

UNLESS NOTED OTHERWISE, THE FOLLOWING MINIMUM CONCRETE COVER SHALL BE PROVIDED FOR REINFORCING STEEL IN ACCORDANCE WITH ACI 318.

PLACEMENT/ EXPOSURE CONDITION	MINIMUM COVER
(a) CONCRETE CAST AGAINST AND PERMANENTLY EXPOSED TO EARTH....	3"
(b) CONCRETE EXPOSED TO EARTH OR WEATHER:	
•6 BARS AND LARGER....	2"
•5 BARS AND SMALLER....	1½"
(c) CONCRETE NOT EXPOSED TO WEATHER OR IN CONTACT WITH GROUND:	
(i) SLABS AND WALLS: •11 BARS AND SMALLER...	¾"
(ii) BEAMS AND COLUMNS: PRIMARY REINFORCEMENT, TIES, AND STIRRUPS...	1½"

MINIMUM LAP SPLICES OF REINFORCING BARS IN TENSION (PER ACI 318-89)

BAR SIZE / CENTER TO CENTER BAR SPACING	f'c = 4000psi (--TOP BARS--) LESS THAN 4db	(--TOP BARS--) 4db OR MORE	(--OTHER BARS--) LESS THAN 4db	(--OTHER BARS--) 4db OR MORE	(--OTHER BARS--) 4db
•3	18	18	16	16	1 1/2 "
•4	26	24	20	19	2"
•5	40	30	31	23	2 1/2 "
•6	57	36	44	28	3"
•7	77	42	59	33	3 1/2 "
•8	102	51	78	39	4"
•9	129	64	99	50	4 1/2 "
•10	163	82	126	63	5"
•11	200	100	159	77	5 5/8 "

BAR SIZE / CENTER TO CENTER BAR SPACING	f'c = 3000psi (--TOP BARS--) LESS THAN 4db	(--TOP BARS--) 4db OR MORE	(--OTHER BARS--) LESS THAN 4db	(--OTHER BARS--) 4db OR MORE	(--OTHER BARS--) 4db
•3	21	21	16	16	1 1/2 "
•4	30	28	23	22	2"
•5	46	35	36	27	2 1/2 "
•6	65	42	50	32	3"
•7	89	50	69	39	3 1/2 "
•8	117	66	90	51	4"
•9	148	83	114	64	4 1/2 "
•10	188	106	145	81	5"
•11	231	130	178	100	5 5/8 "

NOTES:
1. YIELD STRENGTH OF REINFORCEMENT, fy, IS 60 ksi (LAP SPLICE LENGTH IS IN INCHES).
2. CONCRETE IS NORMAL WEIGHT (150 pcf).
3. TOP BAR INDICATES HORIZONTAL REINFORCEMENT WHICH IS PLACED ABOVE 12" OR MORE OF FRESH CONCRETE.
4. UNLESS NOTED OTHERWISE COLUMNS & PIERS UTILIZE TENSION LAP SPLICES.
5. STRAIGHT DEVELOPMENT LENGTH OF AN UNLAPPED BAR IS EQUAL TO VALUE FROM TABLE DIVIDED BY 1.3.
6. CATEGORY FOR BARS SPACED LESS THAN 4d, ON CENTER CORRESPONDS TO CATEGORY 1 IN THE CRSI HANDBOOK WHEREAS FOR BARS SPACED 4d, OR MORE ON CENTER CORRESPOND TO CRSI CATEGORY 5.

US ARMY CORPS OF ENGINEERS
SAVANNAH DISTRICT

DESIGNED BY	CHECKED BY	SIZE F
CATEGORY CODE 721-81-06		
CONTRACT NO: DACA21-02-C-0046		
DATE: 23 APRIL 2003	PLOT SCALE: -	

CLARK DESIGN/BUILD, LLC

DATE	BY	DESCRIPTION	SYMBOL

DESIGN FILE: $$FILE NAME$$
$$DATE$$

BASIC COMBAT TRAINEE BARRACKS COMPLEX I
FORT JACKSON, SOUTH CAROLINA
TRAINEE BARRACKS

STRUCTURAL GENERAL NOTES

PLATE REFERENCE NUMBER:
S-001
SHEET 53

CONFORMED DRAWINGS 12 /19 /03

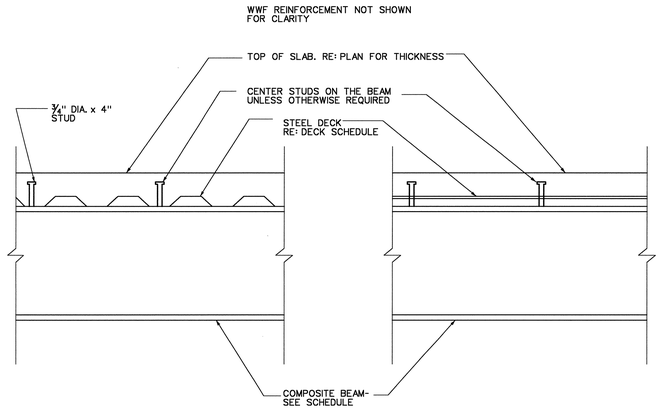

DECK IS PERPENDICULAR OR SKEWED TO BEAM

DECK IS PARALLEL TO BEAM

NOTES:

1. COMPOSITE BEAMS ARE REQUIRED IN AREAS B & D, 2ND AND 3RD FLOOR. IN ADDITION, COMPOSITE BEAMS ARE REQUIRED ON BEAMS OF A BRACED BAY.
2. SPACE STUDS EVENLY AS POSSIBLE IN AVAILABLE DECK FLUTES. WHERE STUD SPACING EXCEEDS THE MAX SPACING ALLOWED, PROVIDE ADDITIONAL STUDS TO SATISFY THE SPACING REQUIREMENTS.
4. WHERE THE NUMBER OF STUDS EXCEEDS THE NUMBER OF FLUTES, PROVIDE TWO STUDS IN EVERY OTHER FLUTE, STARTING AT EACH END OF THE BEAM. THE TRANSVERSE SPACING BETWEEN TWO STUDS IN A SINGLE FLUTE SHALL BE 4x STUD DIAMETERS. (MIN)

A S002 | S002 **COMPOSITE BEAM DETAILS**
SCALE: NONE

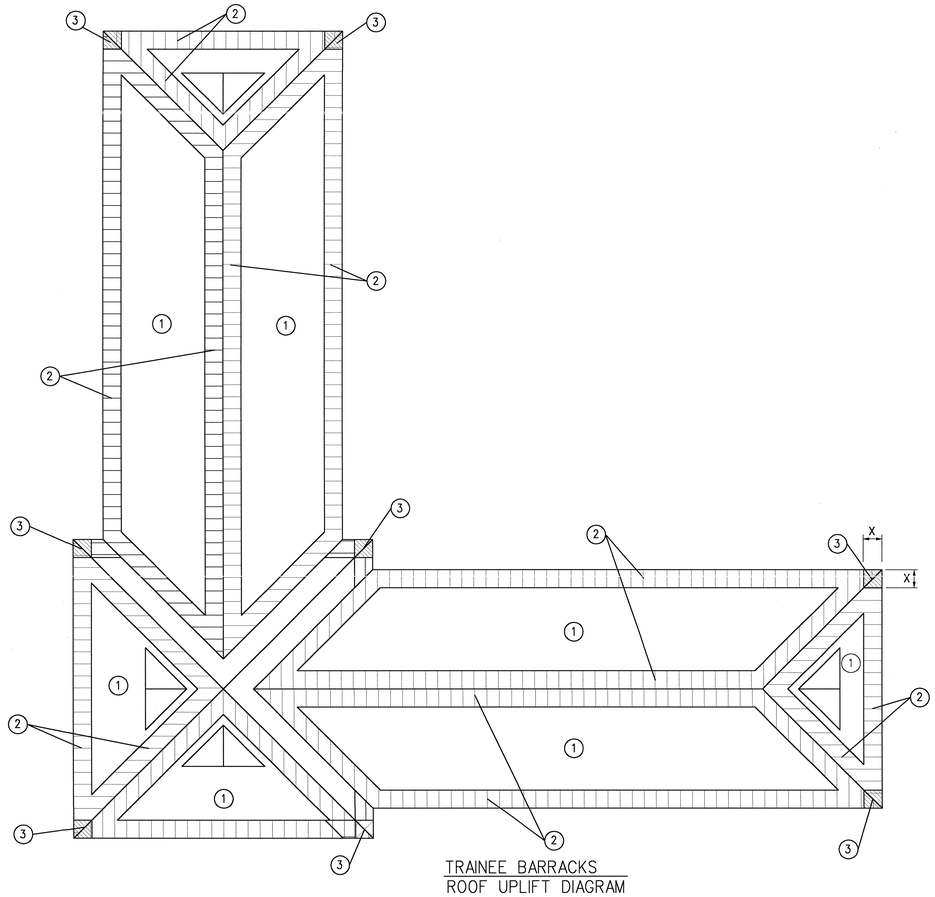

TRAINEE BARRACKS
ROOF UPLIFT DIAGRAM

ROOF MEAN HEIGHT = 49.2'				
LOCATION	UPLIFT PRESSURE (psf)			X
	①	②	③	
BLDG ROOF	24.3	51.5	51.5	6'

DESIGN CRITERIA

1. ENGINEERED IN ACCORDANCE WITH ASCE 7-98 FOR LIVE LOADS AND, WIND LOADS. SEISMIC LOADS ARE PER TI-809-04, DATED 31 DECEMBER 1998.

2. GRAVITY LOADS:

SLEEPING BAY 2nd FLOOR

4 1/2" LW CONC & 2" PMF	= 35 PSF
METAL SOFFITT	= 2 PSF
INSUL	= 1 PSF
MISCELLANEOUS	= 4 PSF
STR STEEL	= 10 PSF
PARTITIONS	= 20 PSF
DEAD LOAD	= 72 PSF

SLEEPING BAY 3rd FLOOR, DRESSING BAY, SUPPORT BAY

4 1/2" LW CONC & 2" PMF	= 35 PSF
CEILING	= 2 PSF
FIREPROOFING	= 3 PSF
MISCELLANEOUS	= 6 PSF
STR STEEL	= 6 PSF
PARTITIONS	= 20 PSF
DEAD LOAD	= 72 PSF

3. LIVE LOADS:

STAIRS	= 100 PSF
ELEVATED MECH ROOM	= 100 PSF
OFFICES	= 80 PSF
OTHER BARRACKS AREAS	= 40 PSF
ROOF	= 20 PSF

4. EXTERIOR WALLS

BRICK & STUD BACK-UP = 40 + 10 = 50 PSF

5. ATTIC & ROOF

STANDING SEAM METAL	= 2 PSF
COLD-FORM TRUSS SYSTEM	= 4 PSF
METAL DECK & INSULATION	= 5 PSF
STRUCT STEEL	= 4 PSF
CEILING (GYP BD & METAL)	= 8 PSF
MISC	= 4 PSF
DEAD LOAD	= 27 PSF

1.0 WIND LOAD (PER ASCE 7-98)

1.0.1 BASIC WIND SPEED = 90 mph
EXPOSURE C: IMPORTANCE FACTOR I= 1.0

1.0.2 DESIGN WIND PRESSURE - MAIN WINDFORCE RESISTING SYSTEM

LOCATION	WINDWARD (@ MEAN ROOF HEIGHT)	LEEWARD (@ MEAN ROOF HEIGHT)	ROOF	
MAIN BUILDING	16.2 PSF	5.6 PSF	11.6 PSF	(UPLIFT)
MAIN BUILDING @ CORNERS 5.4M	22.2 PSF	11.6 PSF	20.2 PSF	(UPLIFT)

1.0.3 DESIGN WIND PRESSURE - WALL COMPONENTS & CLADDING

EXTERIOR WALL SYSTEMS & THEIR ATTACHMENTS TO THE PRIMARY STRUCTURE SHALL BE DESIGNED FOR THE PRESSURES SHOWN IN THE DIAGRAM BELOW:

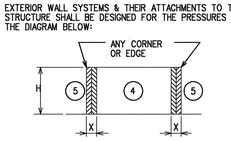

PRESSURE ON EXTERIOR WALL SYSTEMS FOR BUILDINGS WITH MEAN ROOF HEIGHT (H) = 0 TO 49.2'

LOCATION	H	WINDWARD PRESSURE PSF (INWARD)		LEEWARD PRESSURE PSF (OUTWARD)		X
		④	⑤	④	⑤	
MAIN BLDG	49.2'	26.8	26.8	28.9	35.8	6'

1.0.4 DESIGN WIND PRESSURE - ROOF UPLIFT
JOIST, ROOF DECK & FASTENERS SHALL BE DESIGNED FOR THE WIND PRESSURES SHOWN ON ROOF UPLIFT DIAGRAM.

2.0 SEISMIC LOAD (PER TI 809-04, DATED 31 DECEMBER 1998)

2.0.1 SEISMIC USE GROUP: I
2.0.2 SPECTRAL RESPONSE COEFFICIENTS: S_s = 0.59, S_1 = 0.19
2.0.3 SITE CLASS: D
2.0.4 BASIC SEISMIC FORCE RESISTING SYSTEM:
BUILDING FRAME SYSTEM, ORDINARY STEEL CONCENTRICALLY BRACED FRAMES
2.0.5 SEISMIC RESPONSE COEFFICIENT: Cs = 0.105
2.0.6 DESIGN BASE SHEAR: AREA A = 164 kips
AREAS B,C,D & E = 247 kips (EACH)
2.0.7 ANALYSIS PROCEDURE: EQUIVALENT LATERAL FORCE PROCEDURE
2.0.8 SEISMIC DESIGN CATEGORY: D

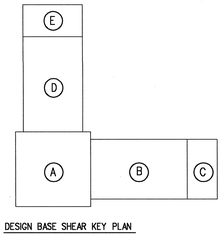

DESIGN BASE SHEAR KEY PLAN

US ARMY CORPS OF ENGINEERS
SAVANNAH DISTRICT

DESIGNED BY	CHECKED BY	SIZE F.
CATEGORY CODE 721-81-06		
CONTRACT NO: DACA21-02-C-0046		
DATE: 23 APRIL 2003		
PLOT SCALE: 1		

CLARK DESIGN/BUILD, LLC

DATE	BY	SYMBOL	DESCRIPTION

DESIGN FILE: $$FILE NAME$$
$$DATE$$

BASIC COMBAT TRAINEE BARRACKS COMPLEX I
FORT JACKSON, SOUTH CAROLINA
TRAINEE BARRACKS

STRUCTURAL
GENERAL NOTES

PLATE REFERENCE NUMBER:
S-002
SHEET 54

CONFORMED DRAWINGS 12 /19 /03

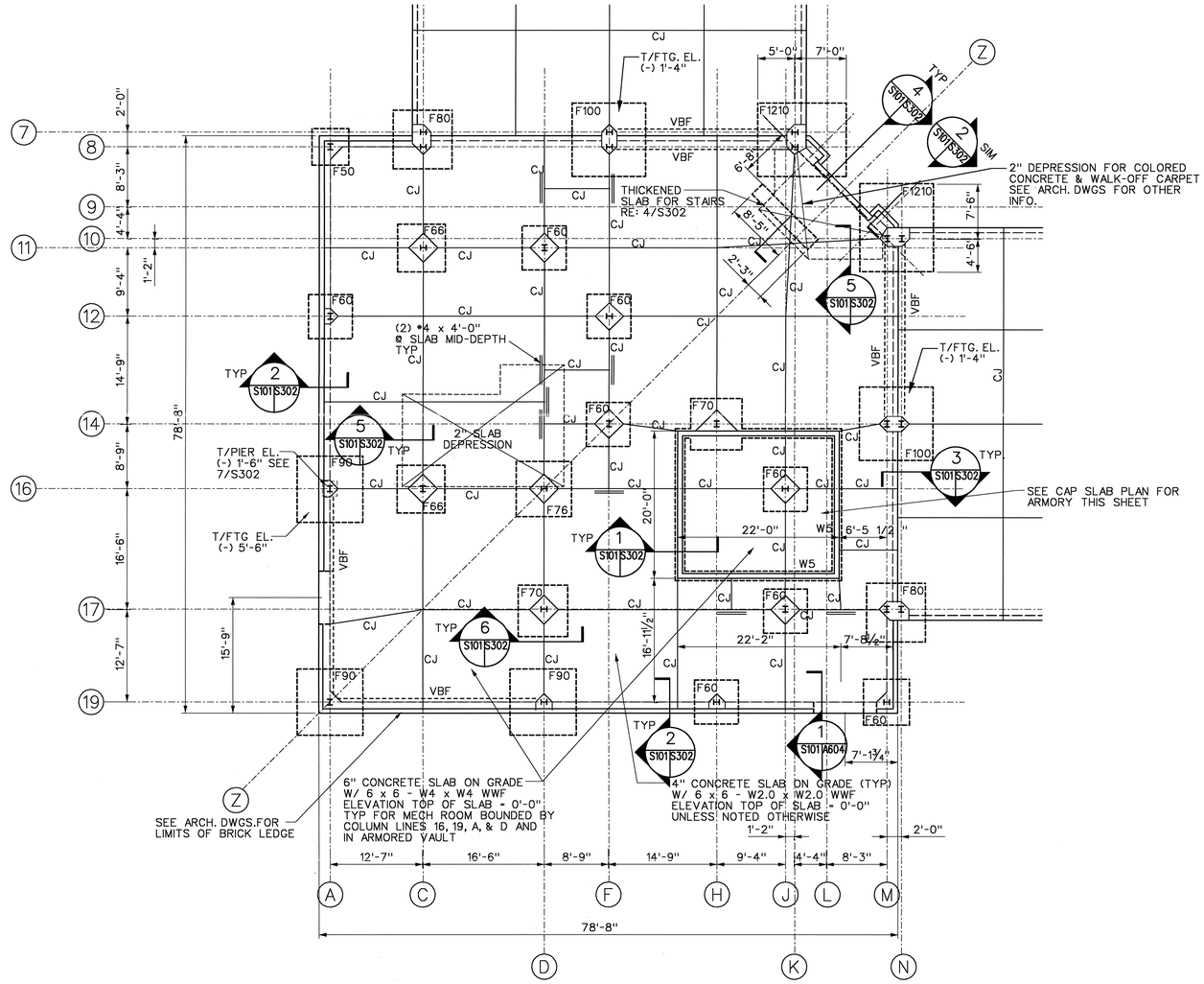

1 S101 | S101 PARTIAL FOUNDATION PLAN AREA A
SCALE - 1/8" - 1'-0"

FOOTING SCHEDULE

MARK	FOOTING SIZE	FOOTING THICKNESS	REINFORCING
F50	5'-0" x 5'-0"	1'-0"	6-#5 EACH WAY
F60	6'-0" x 6'-0"	1'-3"	6-#6 EACH WAY
F66	6'-6" x 6'-6"	1'-3"	6-#6 EACH WAY
F70	7'-0" x 7'-0"	1'-6"	8-#6 EACH WAY
F76	7'-6" x 7'-6"	1'-6"	8-#6 EACH WAY
F80	8'-0" x 8'-0"	1'-9"	7-#7 EACH WAY
F90	9'-0" x 9'-0"	1'-9"	8-#8 EACH WAY
F100	10'-0" x 10'-0"	2'-0"	9-#8 EACH WAY
F1080	10'-0" x 8'-0"	2'-0"	#6 @ 12" EACH WAY
F1210	12'-0" x 10'-0"	2'-0"	#6 @ 12" EACH WAY

FOOTING SCHEDULE NOTES:
1.) REINFORCE TOP & BOTTOM @ VERT. BRACE FRAME LOCATIONS

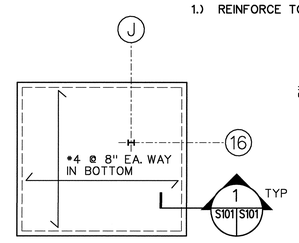

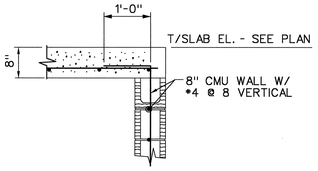

1 S101 | S101 SECTION
SCALE: 3/4" - 1'-0"

2 S101 | S101 CAP SLAB PLAN AT ARMORY
SCALE - 1/8" - 1'-0"
NOTE: COORDINATE OPENINGS WITH MECHANICAL AND ELECTRICAL DRAWINGS.

NOTES

1. FOOTING MARK, SEE SCHEDULE ON THIS DRAWING → FXX
2. TOP OF EXTERIOR FTGS. SHALL BE (-)1'-4" UNLESS NOTED. TOP ELEV. OF INTERIOR FTGS. SHALL BE (-)1'-0" UNLESS NOTED. → WX
3. DENOTES CONTROL JOINT SEE DETIALS ON S301 → CJ
4. LOCATE SLAB ON GRADE WIRE MESH AT 1/2" FROM TOP OF SLAB
5. PLACE ALL SLAB ON GRADE OVER 6 mil VAPOR BARRIER OVER 4" CRUSHED STONE CAPILLARY WATER BARRIER
6. VBF DENOTES VERTICAL BRACE FRAMING FOR ELEVATIONS SEE SHEETS S201 & S202
7. COLUMN FOOTINGS SHALL NOT BEAR DIRECTLY ON EXPANSIVE KAOLIN CLAY. IF CLAY IS FOUND IN FOOTING EXCAVATION, OVEREXCAVATE TO A LEVEL 30" BELOW FINISHED GRADE. BACKFILL WITH APPROVED MATERIAL COMPACTED AT 95% STANDARD PROCTOR. ALL FOUNDATIONS SHALL BE INSPECTED BY THE PROJECT GEOTECHNICAL ENGINEER.

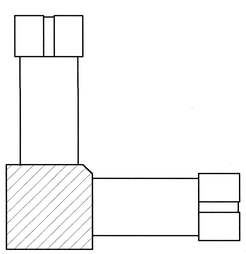

KEY PLAN

8 6 4 2 0 8 16FT
SCALE:1/8"=1'-0"

US ARMY CORPS OF ENGINEERS SAVANNAH DISTRICT

DESIGNED BY | CHECKED BY | SIZE F
CATEGORY CODE 721-81-06
CONTRACT NO: DACA21-02-C-0046
DATE:23 APRIL 2003
PLOT SCALE: 1

CLARK CONSTRUCTION
CLARK DESIGN/BUILD, LLC

DESIGN FILE: $$FILE NAME$$
$$DATE$$

SYMBOL	DESCRIPTION	DATE	BY

BASIC COMBAT TRAINEE BARRACKS COMPLEX I
FORT JACKSON, SOUTH CAROLINA
TRAINEE BARRACKS

PARTIAL FOUNDATION PLAN AREA A

PLATE REFERENCE NUMBER: S-101
SHEET 55

CONFORMED DRAWINGS 12 /19 /03

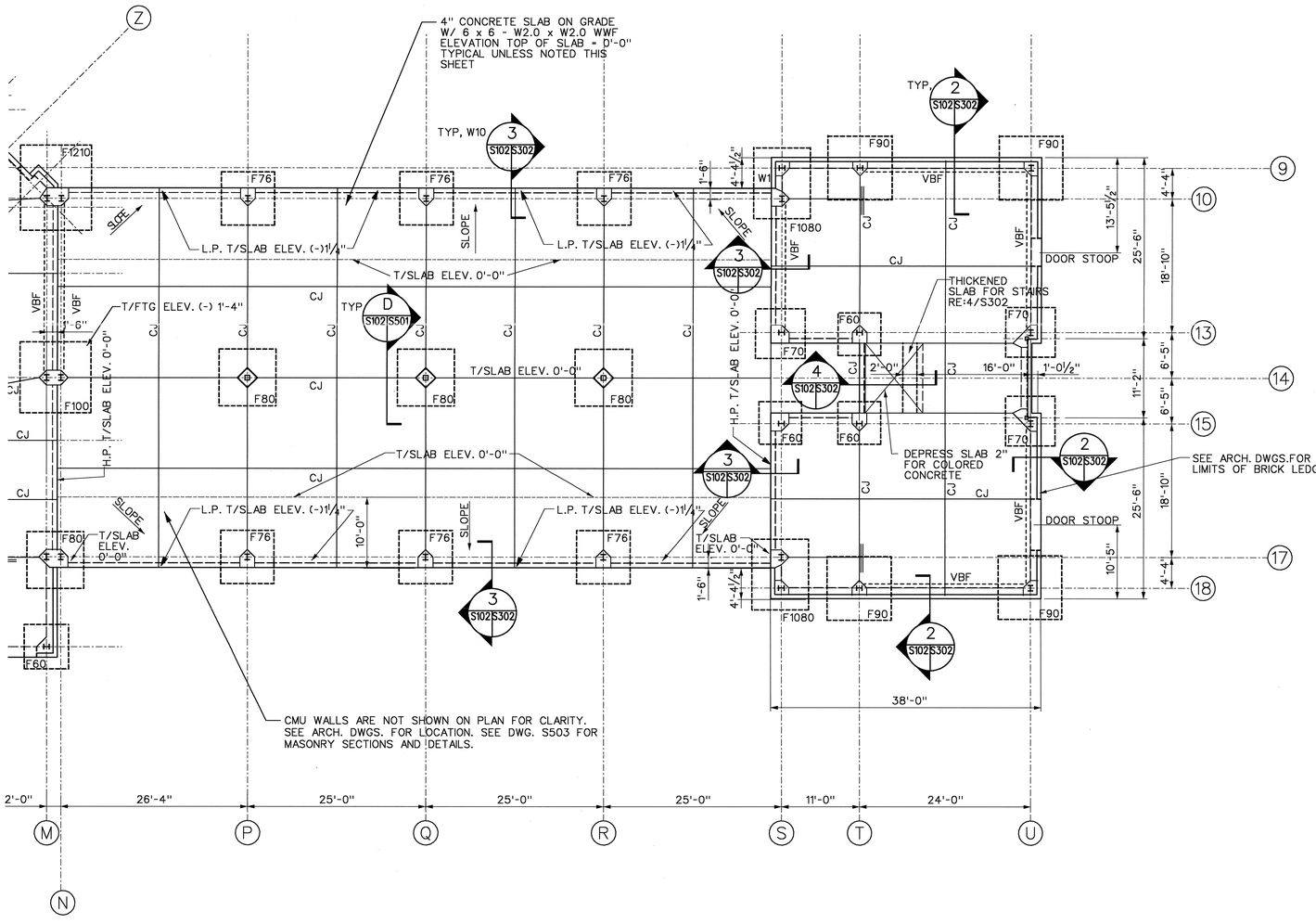

1 S102|S102 PARTIAL FOUNDATION PLAN AREA B & C
SCALE - ⅛" - 1'-0"

NOTES

1. FOOTING MARK, SEE SCHEDULE ON SHEET S101 → FXX
2. TOP OF EXTERIOR FTGS. SHALL BE (-)1'-4" UNLESS NOTED. TOP ELEV. OF INTERIOR FTGS. SHALL BE (-)1'-0" UNLESS NOTED. → WX
3. DENOTES CONTROL JOINT SEE DETIALS ON S301 → CJ
4. LOCATE SLAB ON GRADE WIRE MESH AT 1½" FROM TOP OF SLAB
5. PLACE ALL SLAB ON GRADE OVER 6 mil VAPOR BARRIER OVER 4" CRUSHED STONE CAPILLARY WATER BARRIER
6. VBF DENOTES VERTICAL BRACE FRAMING FOR ELEVATIONS SEE SHEETS S201 & S202
7. COLUMN FOOTINGS SHALL NOT BEAR DIRECTLY ON EXPANSIVE KAOLIN CLAY. IF CLAY IS FOUND IN FOOTING EXCAVATION, OVEREXCAVATE TO A LEVEL 30" BELOW FINISHED GRADE. BACKFILL WITH APPROVED MATERIAL COMPACTED AT 95% STANDARD PROCTOR. ALL FOUNDATIONS SHALL BE INSPECTED BY THE PROJECT GEOTECHNICAL ENGINEER.

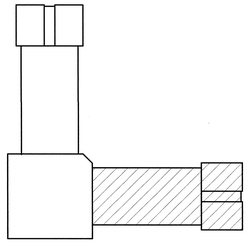

KEY PLAN

8 6 4 2 0 8 16FT
SCALE:⅛"=1'-0"

US ARMY CORPS OF ENGINEERS SAVANNAH DISTRICT

DESIGNED BY	CHECKED BY	SIZE F
CATEGORY CODE 721-81-06		
CONTRACT NO: DACA21-02-C-0046	DATE:23 APRIL 2003	
	PLOT SCALE: 1	

CLARK DESIGN/BUILD, LLC

DESIGN FILE: $$FILE NAME$$
$$DATE$$

SYMBOL	DESCRIPTION	DATE	BY

BASIC COMBAT TRAINEE BARRACKS COMPLEX I
FORT JACKSON, SOUTH CAROLINA
TRAINEE BARRACKS

PARTIAL FOUNDATION PLAN AREA B & C

PLATE REFERENCE NUMBER: S-102
SHEET 56

CONFORMED DRAWINGS 12 /19 /03

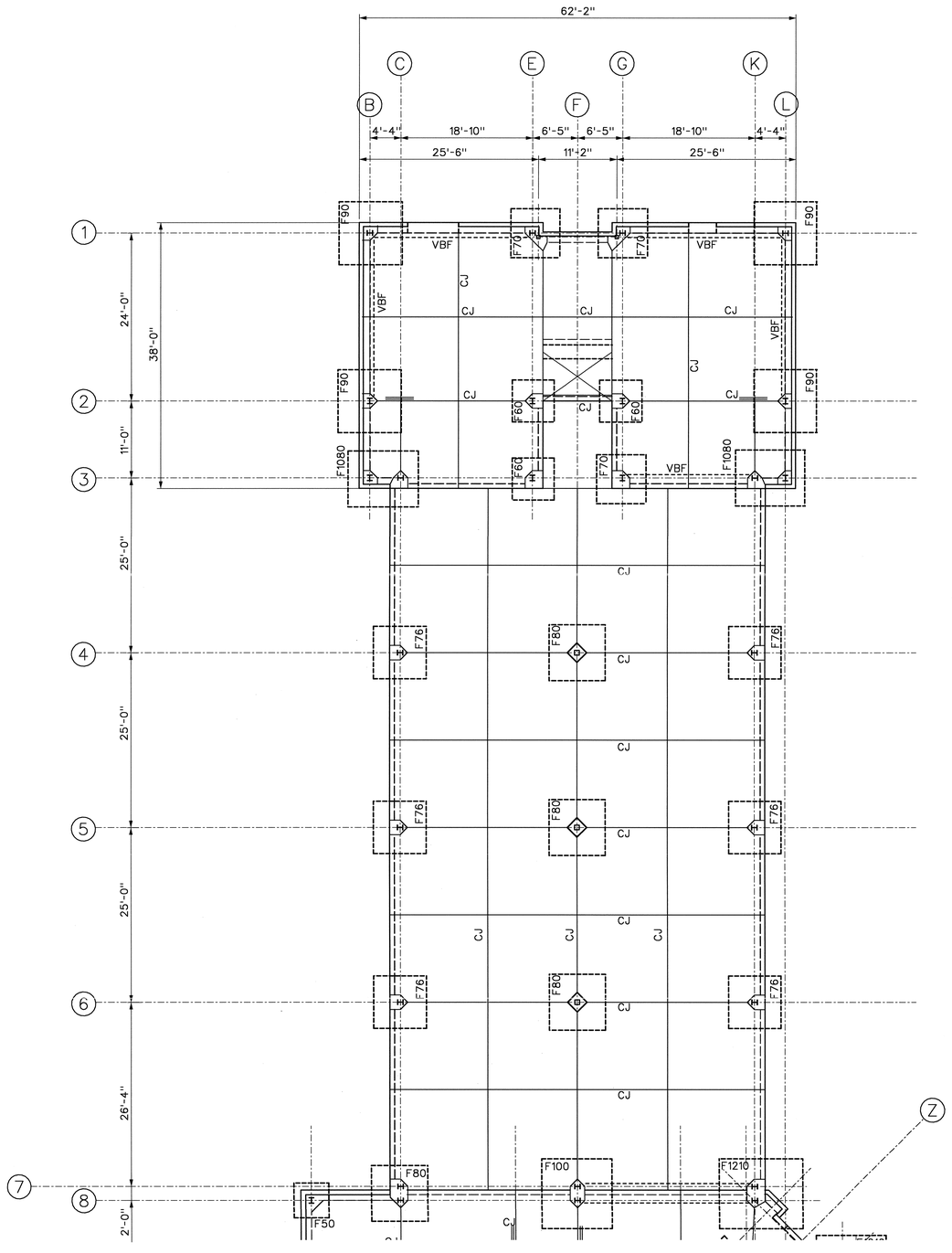

1 S103 S103 PARTIAL FOUNDATION PLAN AREA D & E
SCALE - 1/8" - 1'-0"

FOUNDATION PLAN FOR AREA "D&E" IS A MIRROR IMAGE OF THE FOUNDATION PLAN FOR AREA "B&C" ABOUT COLUMN LINE "Z". REFERENCE SHEET S102 FOR FOUNDATION INFORMATION (FOOTING SIZES, DETAILS, JOINTS, ETC.).

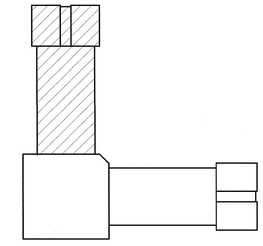

KEY PLAN

8 6 4 2 0 8 16FT
SCALE:1/8"=1'-0"

US ARMY CORPS OF ENGINEERS
SAVANNAH DISTRICT

DESIGNED BY | CHECKED BY | SIZE F
CATEGORY CODE 721-81-06
CONTRACT NO: DACA21-02-C-0046
DATE:23 APRIL 2003
PLOT SCALE: 1

CLARK DESIGN/BUILD, LLC

DESIGN FILE: $$FILE NAME$$
$$DATE$$

SYMBOL	DESCRIPTION	DATE	BY

BASIC COMBAT TRAINEE BARRACKS COMPLEX I
FORT JACKSON, SOUTH CAROLINA
TRAINEE BARRACKS

PARTIAL FOUNDATION PLAN AREA D & E

PLATE REFERENCE NUMBER:
S-103
SHEET 57

CONFORMED DRAWINGS 12 /19 /03

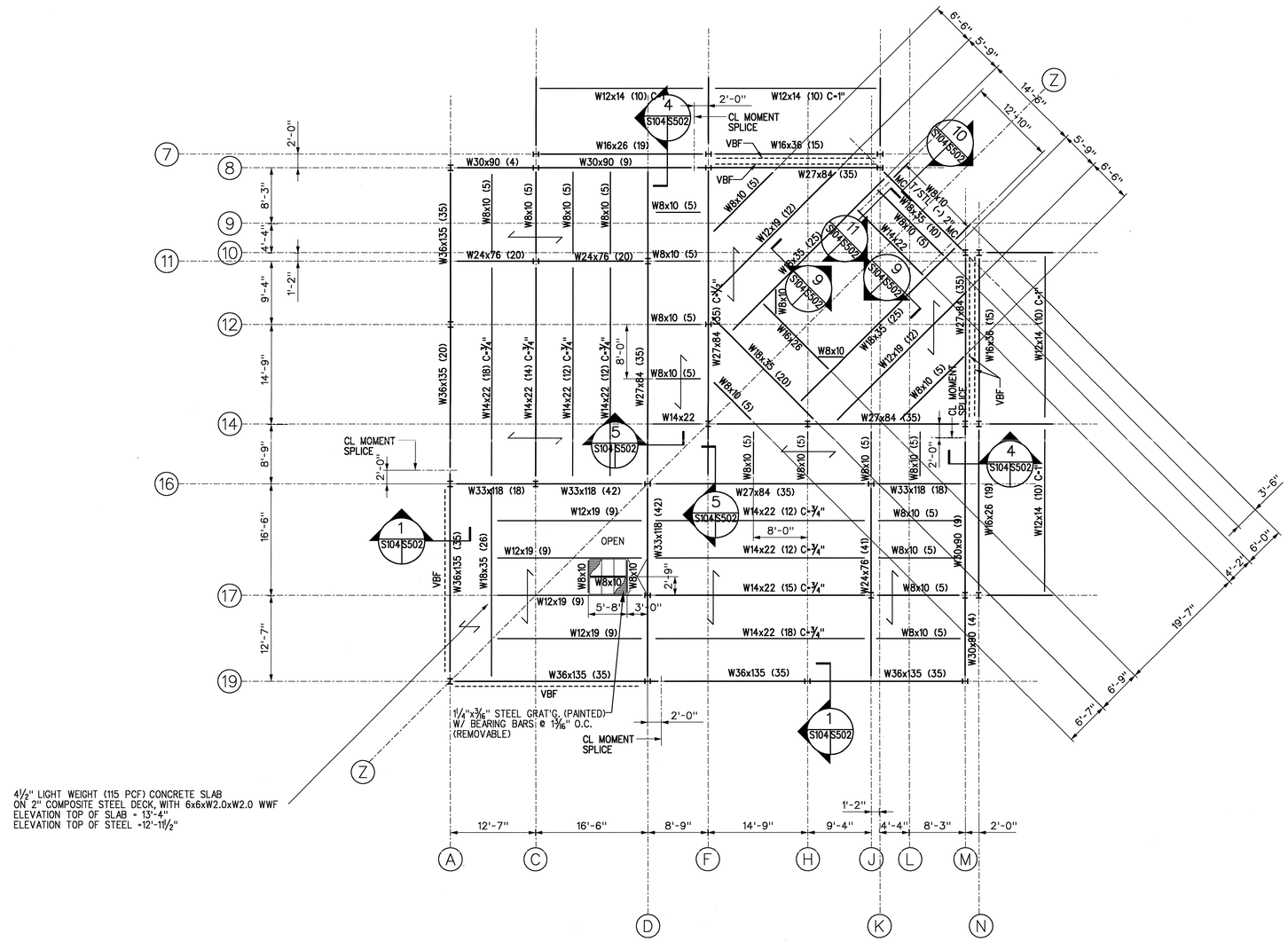

1 S104 S104 PARTIAL 2ND FLOOR FRAMING PLAN AREA A
SCALE = ⅛" = 1'-0"

NOTES

1. DASHED LINE INDICATES LOCATION OF BRACED BAY. SEE DRAWING S201 & S202
2. INDICATES SPAN OF DECK AND SLAB
3. BEAMS ARE LOCATED AT EQUAL SPACING BETWEEN COLUMN GRID LINES, U.N.O.
4. CONTRACTOR SHALL PROVIDE CELL CLOSURES AND POUR STOPS AS REQUIRED FOR CONCRETE DECK PLACEMENT.
5. NUMBER IN PARENTHESES AFTER BEAM MARK IS NUMBER OF FIELD APPLIED HEADED STUDS
6. SEE DWG. S-501 FOR COLUMN & BASE PLATE SCHEDULES.
7. C=¾" DENOTES AMOUNT OF CAMBER REQUIRED FROM FABRICATOR
8. SEE CIVIL DRAWINGS FOR BUILDING ORIENTATION.

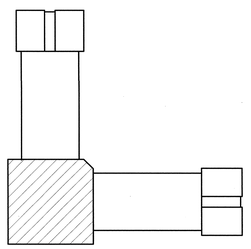

KEY PLAN

8 6 4 2 0 8 16FT
SCALE:⅛"=1'-0"

US ARMY CORPS OF ENGINEERS SAVANNAH DISTRICT

DESIGNED BY | CHECKED BY | SIZE F
CATEGORY CODE 721-81-06
CONTRACT NO: DACA21-02-C-0046
DATE:23 APRIL 2003
PLOT SCALE: 1

CLARK CONSTRUCTION
CLARK DESIGN/BUILD, LLC

DESIGN FILE: $$FILE NAME$$
$$DATE$$

SYMBOL	DESCRIPTION	DATE	BY

BASIC COMBAT TRAINEE BARRACKS COMPLEX I
FORT JACKSON, SOUTH CAROLINA
TRAINEE BARRACKS

PARTIAL 2ND FLOOR FRAMING PLAN AREA A

PLATE REFERENCE NUMBER:
S-104
SHEET 58

CONFORMED DRAWINGS 12 /19 /03

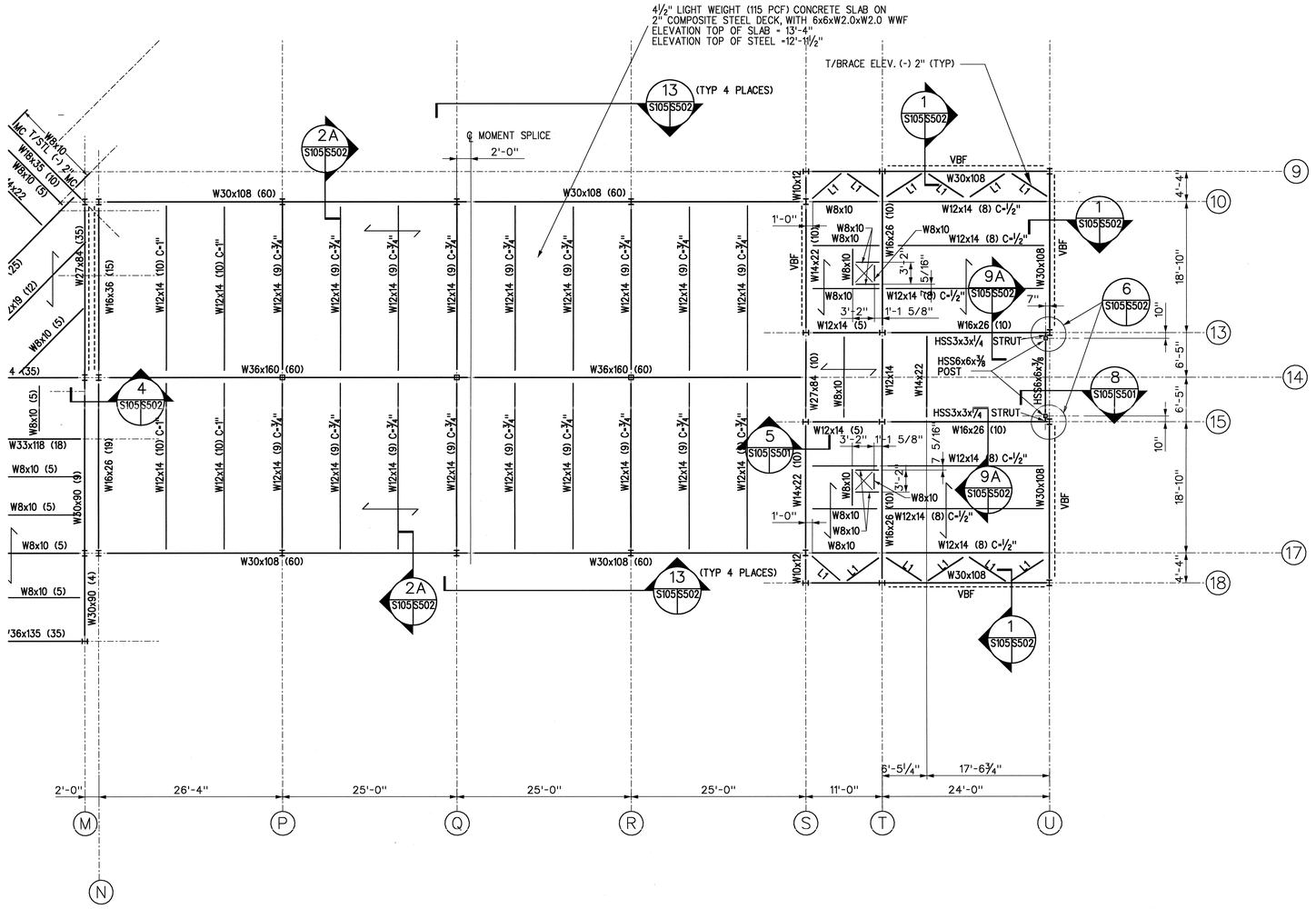

1 S105 S105 PARTIAL 2ND FLOOR FRAMING PLAN AREA B & C
SCALE = ⅛" = 1'-0"

NOTES

1. DASHED LINE INDICATES LOCATION OF BRACED BAY. SEE DRAWING S201 & S202.
2. INDICATES SPAN OF DECK AND SLAB
3. BEAMS ARE LOCATED AT EQUAL SPACING BETWEEN COLUMN GRID LINES, U.N.O.
4. CONTRACTOR SHALL PROVIDE CELL CLOSURES AND POUR STOPS AS REQUIRED FOR CONCRETE DECK PLACEMENT.
5. NUMBER IN PARENTHESES AFTER BEAM MARK IS NUMBER OF FIELD APPLIED HEADED STUDS
6. SEE DWG. S-501 FOR COLUMN & BASE PLATE SCHEDULES.
7. C=¾" DENOTES AMOUNT OF CAMBER REQUIRED FROM FABRICATOR
8. SEE CIVIL DRAWINGS FOR BUILDING ORIENTATION.
9. L1= (2)-L4x4x½

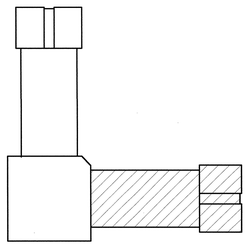

KEY PLAN

8 6 4 2 0 8 16FT
SCALE: ⅛"=1'-0"

US ARMY CORPS OF ENGINEERS SAVANNAH DISTRICT

DESIGNED BY | CHECKED BY | SIZE F
CATEGORY CODE 721-81-06
CONTRACT NO: DACA21-02-C-0046
DATE: 23 APRIL 2003
PLOT SCALE: :

CLARK CONSTRUCTION
CLARK DESIGN/BUILD, LLC

DESIGN FILE: $$FILE NAME$$
$$DATE$$

SYMBOL	DESCRIPTION	DATE	BY

BASIC COMBAT TRAINEE BARRACKS COMPLEX I
FORT JACKSON, SOUTH CAROLINA
TRAINEE BARRACKS

PARTIAL 2ND FLOOR FRAMING PLAN AREA B&C

PLATE REFERENCE NUMBER:
S-105
SHEET 59

CONFORMED DRAWINGS 12 /19 /03

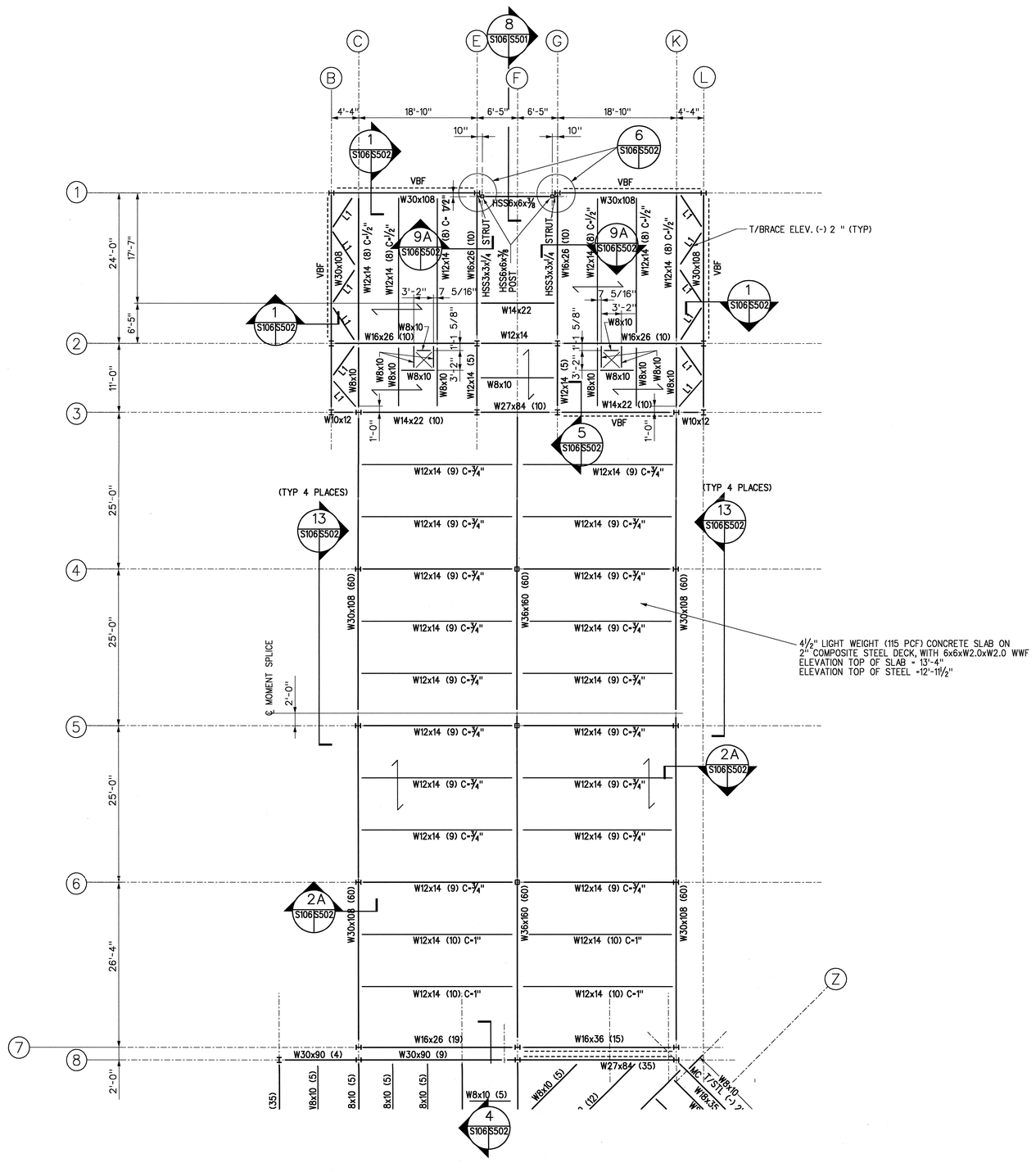

4½" LIGHT WEIGHT (115 PCF) CONCRETE SLAB ON 2" COMPOSITE STEEL DECK, WITH 6x6xW2.0xW2.0 WWF
ELEVATION TOP OF SLAB = 13'-4"
ELEVATION TOP OF STEEL =12'-11½"

1 S106|S106 PARTIAL 2ND FLOOR FRAMING PLAN AREA D & E
SCALE - ⅛" = 1'-0"

NOTES

1. DASHED LINE INDICATES LOCATION OF BRACED BAY. SEE DRAWING S201 & S202
2. INDICATES SPAN OF DECK AND SLAB
3. BEAMS ARE LOCATED AT EQUAL SPACING BETWEEN COLUMN GRID LINES, U.N.O.
4. CONTRACTOR SHALL PROVIDE CELL CLOSURES AND POUR STOPS AS REQUIRED FOR CONCRETE DECK PLACEMENT.
5. NUMBER IN PARENTHESES AFTER BEAM MARK IS NUMBER OF FIELD APPLIED HEADED STUDS
6. SEE DWG. S-501 FOR COLUMN & BASE PLATE SCHEDULES.
7. C-¾" DENOTES AMOUNT OF CAMBER REQUIRED FROM FABRICATOR
8. SEE CIVIL DRAWINGS FOR BUILDING ORIENTATION.
9. L1= (2)-L4x4x½

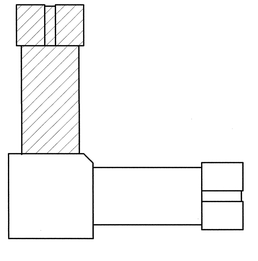

KEY PLAN

8 6 4 2 0 8 16FT
SCALE:⅛"-1'-0"

US ARMY CORPS OF ENGINEERS
SAVANNAH DISTRICT

DESIGNED BY	CHECKED BY	SIZE F
CATEGORY CODE 721-81-06		
CONTRACT NO: DACA21-02-C-0046		
DATE: 23 APRIL 2003	PLOT SCALE: 1	

CLARK CONSTRUCTION
CLARK DESIGN/BUILD, LLC

DESIGN FILE: $$FILE NAME$$
$$DATE$$

SYMBOL	DESCRIPTION	BY	DATE

BASIC COMBAT TRAINEE BARRACKS COMPLEX I
FORT JACKSON, SOUTH CAROLINA
TRAINEE BARRACKS

PARTIAL 2ND FLOOR FRAMING PLAN AREA D & E

PLATE REFERENCE NUMBER: S-106
SHEET 60

CONFORMED DRAWINGS 12 /19 /03

NOTES

1. DASHED LINE INDICATES LOCATION OF BRACED BAY. SEE DRAWINGS S201 & S202.
2. INDICATES SPAN OF DECK AND SLAB
3. BEAMS ARE LOCATED AT EQUAL SPACING BETWEEN COLUMN GRID LINES, U.N.O.
4. CONTRACTOR SHALL PROVIDE CELL CLOSURES AND POUR STOPS AS REQUIRED FOR CONCRETE DECK PLACEMENT.
5. NUMBER IN PARENTHESES AFTER BEAM MARK IS NUMBER OF FIELD APPLIED HEADED STUDS
6. SEE DWG. S-501 FOR COLUMN & BASE PLATE SCHEDULES.
7. C-¾" DENOTES AMOUNT OF CAMBER REQUIRED FROM FABRICATOR
8. SEE CIVIL DRAWINGS FOR BUILDING ORENTATION.

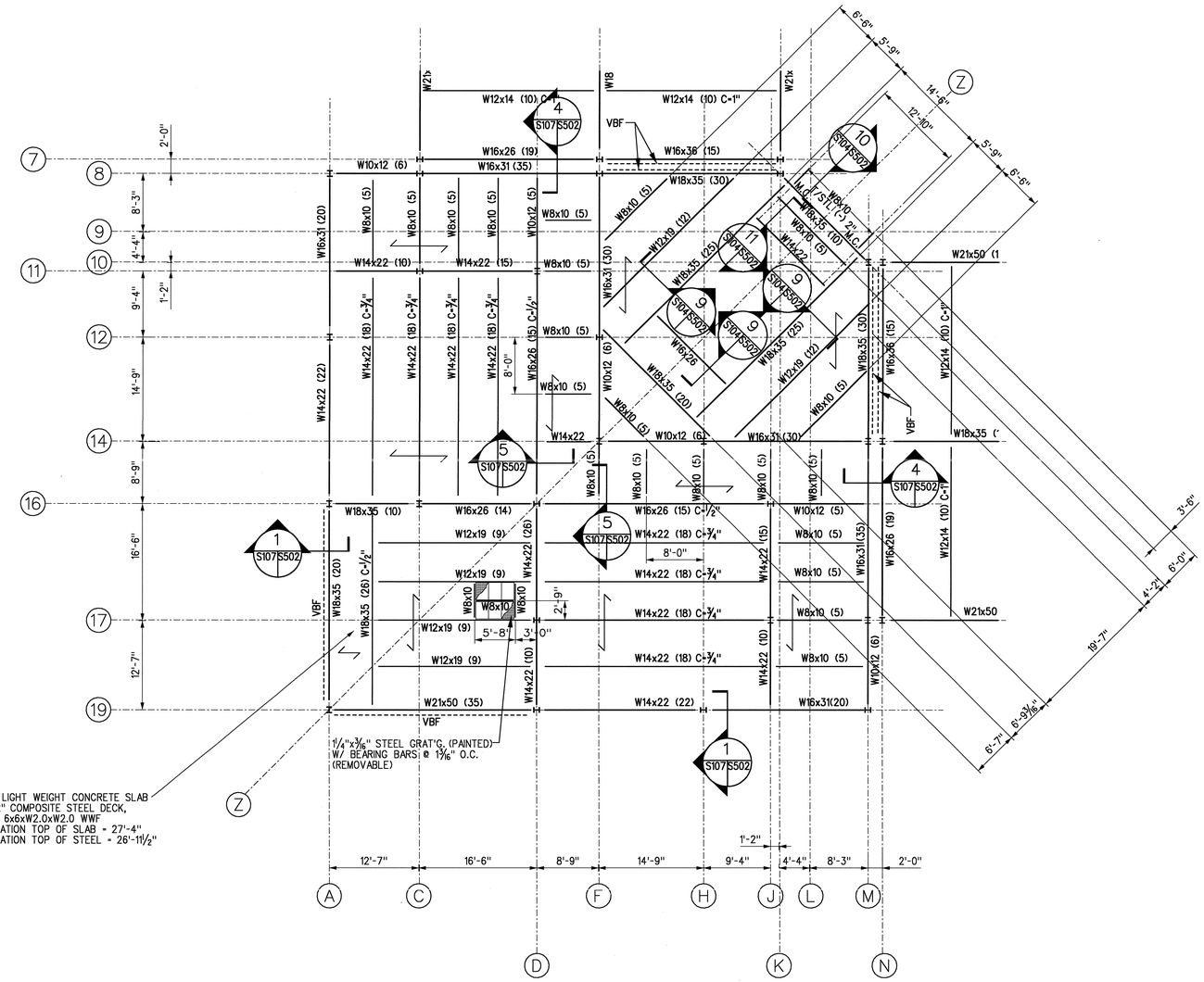

1 / S107|S107 PARTIAL 3RD FLOOR FRAMING PLAN AREA A
SCALE - ⅛" - 1'-0"

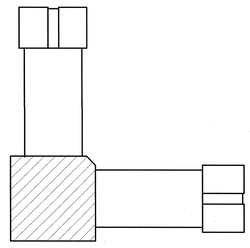

KEY PLAN

8 6 4 2 0 8 16FT
SCALE:⅛"=1'-0"

US ARMY CORPS OF ENGINEERS SAVANNAH DISTRICT

DESIGNED BY	CHECKED BY	SIZE F
CATEGORY CODE 721-81-06		
CONTRACT NO. DACA21-02-C-0046		
DATE: 23 APRIL 2003		
PLOT SCALE:		

CLARK CONSTRUCTION
CLARK DESIGN/BUILD, LLC

SYMBOL	DESCRIPTION	DATE	BY

BASIC COMBAT TRAINEE BARRACKS COMPLEX I
FORT JACKSON, SOUTH CAROLINA
TRAINEE BARRACKS

PARTIAL 3RD FLOOR FRAMING PLAN AREA A

PLATE REFERENCE NUMBER: S-107
SHEET 61

DESIGN FILE: $$FILE NAME$$
$$DATE$$

CONFORMED DRAWINGS 12 /19 /03

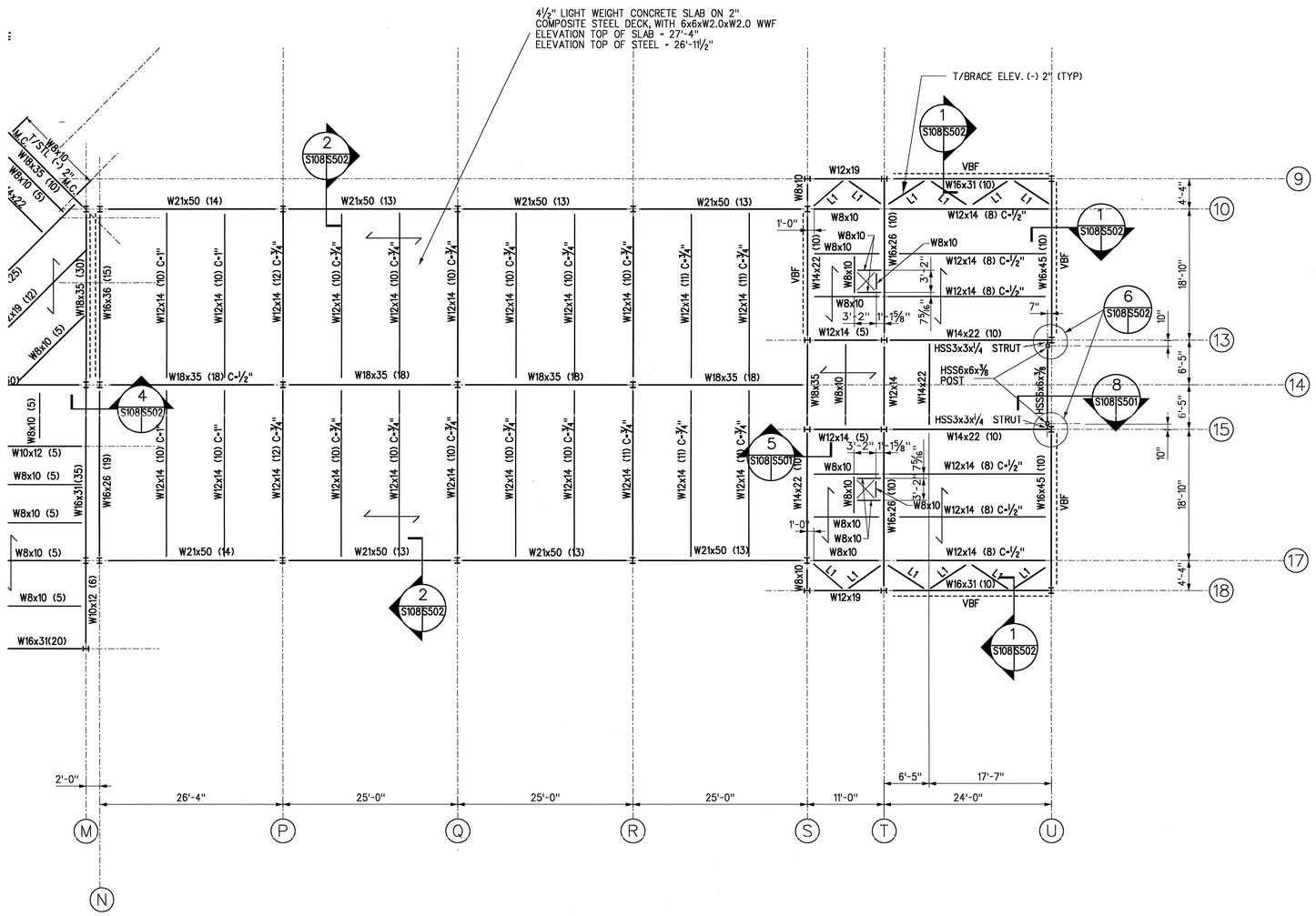

1 S108|S108 PARTIAL 3RD FLOOR FRAMING PLAN AREA B & C
SCALE - ⅛" - 1'-0"

NOTES

1. DASHED LINE INDICATES LOCATION OF BRACED BAY. SEE DRAWING S201 & S202.
2. INDICATES SPAN OF DECK AND SLAB
3. BEAMS ARE LOCATED AT EQUAL SPACING BETWEEN COLUMN GRID LINES, U.N.O.
4. CONTRACTOR SHALL PROVIDE CELL CLOSURES AND POUR STOPS AS REQUIRED FOR CONCRETE DECK PLACEMENT.
5. NUMBER IN PARENTHESES AFTER BEAM MARK IS NUMBER OF FIELD APPLIED HEADED STUDS
6. SEE DWG. S-501 FOR COLUMN & BASE PLATE SCHEDULES.
7. C-¾" DENOTES AMOUNT OF CAMBER REQUIRED FROM FABRICATOR
8. SEE CIVIL DRAWINGS FOR BUILDING ORIENTATION.
9. L1= (2)-L4x4x½

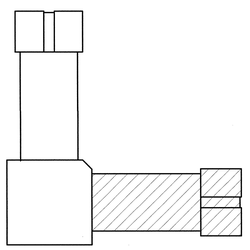

KEY PLAN
8 6 4 2 0 8 16FT
SCALE:⅛"-1'-0"

US ARMY CORPS OF ENGINEERS
SAVANNAH DISTRICT

DESIGNED BY	CHECKED BY	SIZE F
CATEGORY CODE 721-81-06		
CONTRACT NO: DACA21-02-C-0046		
DATE: 23 APRIL 2003		
PLOT SCALE:		

CLARK DESIGN/BUILD, LLC

DESIGN FILE: $$FILE NAME$$
$$DATE$$

DATE	BY	DESCRIPTION	SYMBOL

BASIC COMBAT TRAINEE BARRACKS COMPLEX I
FORT JACKSON, SOUTH CAROLINA
TRAINEE BARRACKS

PARTIAL 3RD FLOOR FRAMING PLAN AREA B&C

PLATE REFERENCE NUMBER:
S-108
SHEET 62

CONFORMED DRAWINGS 12 /19 /03

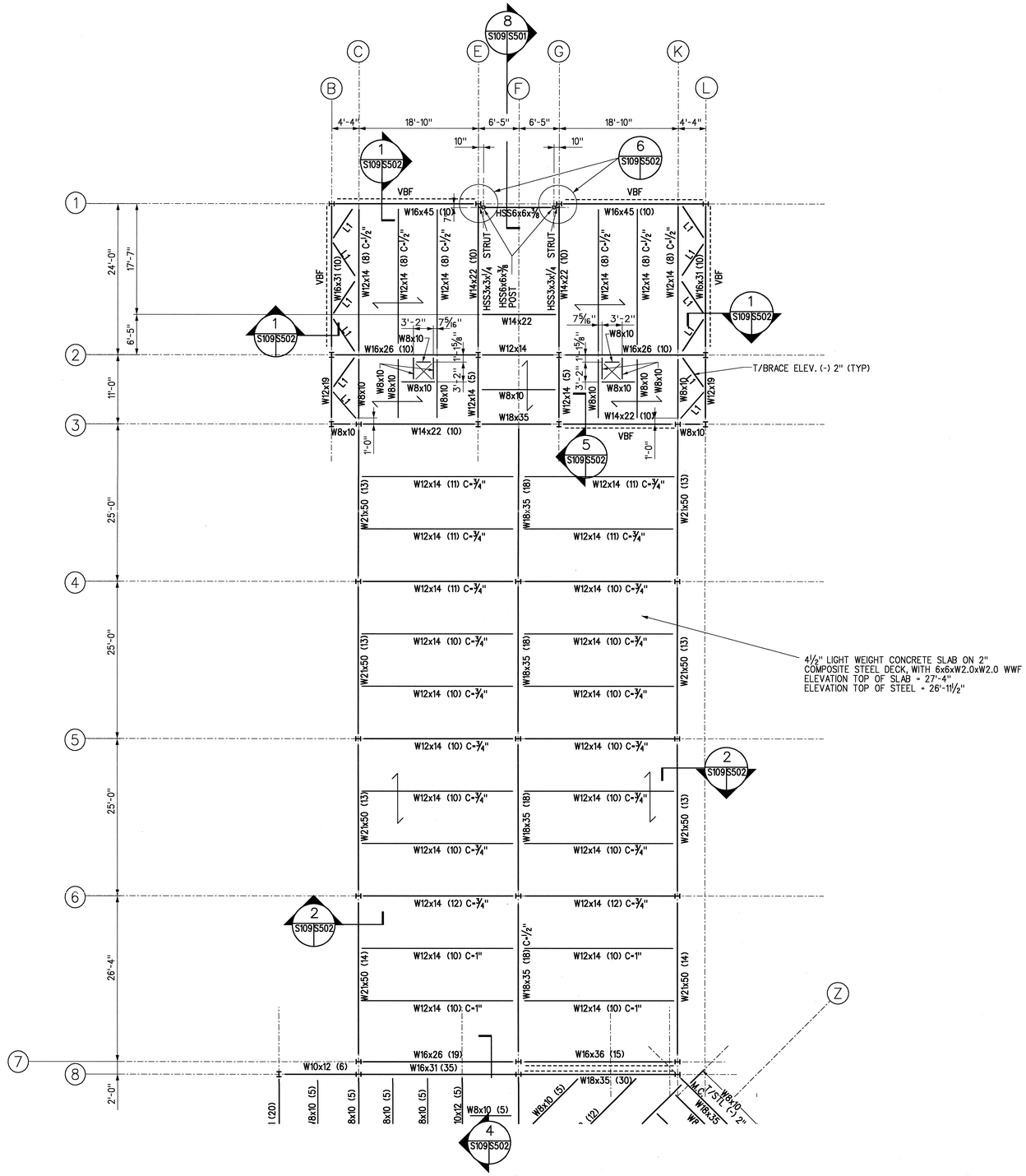

1 S109 S109 PARTIAL 3RD FLOOR FRAMING PLAN AREA D & E
SCALE = 1/8" = 1'-0"

NOTES

1. DASHED LINE INDICATES LOCATION OF BRACED BAY. SEE DRAWING S201 & S202.
2. INDICATES SPAN OF DECK AND SLAB
3. BEAMS ARE LOCATED AT EQUAL SPACING BETWEEN COLUMN GRID LINES, U.N.O.
4. CONTRACTOR SHALL PROVIDE CELL CLOSURES AND POUR STOPS AS REQUIRED FOR CONCRETE DECK PLACEMENT.
5. NUMBER IN PARENTHESES AFTER BEAM MARK IS NUMBER OF FIELD APPLIED HEADED STUDS
6. SEE DWG. S-501 FOR COLUMN & BASE PLATE SCHEDULES.
7. C-3/4" DENOTES AMOUNT OF CAMBER REQUIRED FROM FABRICATOR
8. SEE CIVIL DRAWINGS FOR BUILDING ORIENTATION.
9. L1= (2)-L4x4x1/2

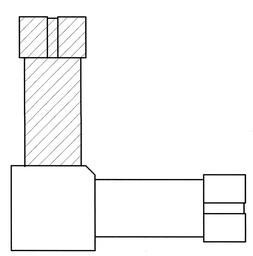

KEY PLAN

8 6 4 2 0 8 16FT
SCALE:1/8"-1'-0"

US ARMY CORPS OF ENGINEERS
SAVANNAH DISTRICT

DESIGNED BY	CHECKED BY	SIZE F
CATEGORY CODE 721-81-06		
CONTRACT NO: DACA21-02-C-0046		
DATE:23 APRIL 2003		
PLOT SCALE: 1		

CLARK CONSTRUCTION
CLARK DESIGN/BUILD, LLC

SYMBOL	DESCRIPTION	DATE	BY

BASIC COMBAT TRAINEE BARRACKS COMPLEX I
FORT JACKSON, SOUTH CAROLINA
TRAINEE BARRACKS

PARTIAL 3RD FLOOR FRAMING PLAN AREA D & E

PLATE REFERENCE NUMBER: S-109
SHEET 63

DESIGN FILE: $$FILE NAME$$
$$DATE$$

CONFORMED DRAWINGS 12 /19 /03

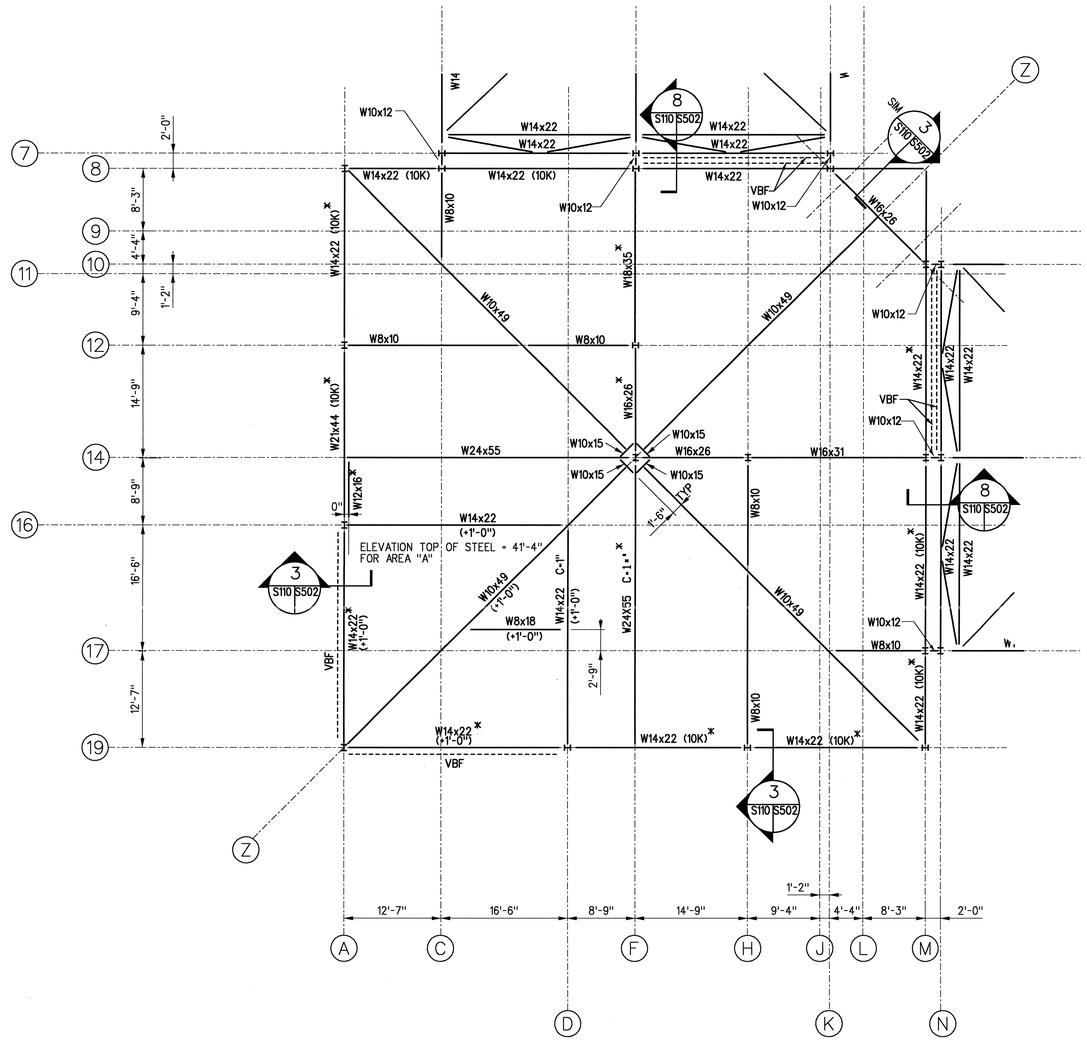

* - DENOTES MEMBER DESIGNED TO SUPPORT LIGHT GAGE METAL TRUSSES.

1 S110 S110 PARTIAL ATTIC FRAMING PLAN AREA A

SCALE - 1/8" - 1'-0"

NOTES

1. DASHED LINE INDICATES LOCATION OF BRACED BAY. SEE DRAWING S201 & S202.
2. CONTRACTOR SHALL PROVIDE CELL CLOSURES AND POUR STOPS AS REQUIRED FOR CONCRETE DECK PLACEMENT.
3. NUMBER IN PARENTHESES AFTER BEAM MARK IS NUMBER OF FIELD APPLIED HEADED STUDS
4. SEE DWG. S-501 FOR COLUMN & BASE PLATE SCHEDULES.

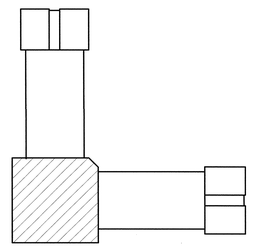

KEY PLAN

8 6 4 2 0 8 16FT

SCALE: 1/8"-1'-0"

US ARMY CORPS OF ENGINEERS SAVANNAH DISTRICT

DESIGNED BY	CHECKED BY	SIZE F
CATEGORY CODE 721-81-06		
CONTRACT NO. DACA21-02-C-0046		
DATE 23 APRIL 2003	PLOT SCALE: 1	

CLARK CONSTRUCTION

CLARK DESIGN/BUILD, LLC

DESIGN FILE: $$FILE NAME$$
$$DATE$$

SYMBOL	DESCRIPTION	DATE	BY

BASIC COMBAT TRAINEE BARRACKS COMPLEX I
FORT JACKSON, SOUTH CAROLINA
TRAINEE BARRACKS

PARTIAL ATTIC FRAMING PLAN AREA A

PLATE REFERENCE NUMBER: S-110

SHEET 64

CONFORMED DRAWINGS 12 /19 /03

NOTES

1. DASHED LINE INDICATES LOCATION OF BRACED BAY. SEE DRAWING S201 & S202.
2. CONTRACTOR SHALL PROVIDE CELL CLOSURES AND POUR STOPS AS REQUIRED FOR CONCRETE DECK PLACEMENT.
3. NUMBER IN PARENTHESES AFTER BEAM MARK IS NUMBER OF FIELD APPLIED HEADED STUDS
4. SEE DWG. S-501 FOR COLUMN & BASE PLATE SCHEDULES.
5. L2= L5x5x5/16

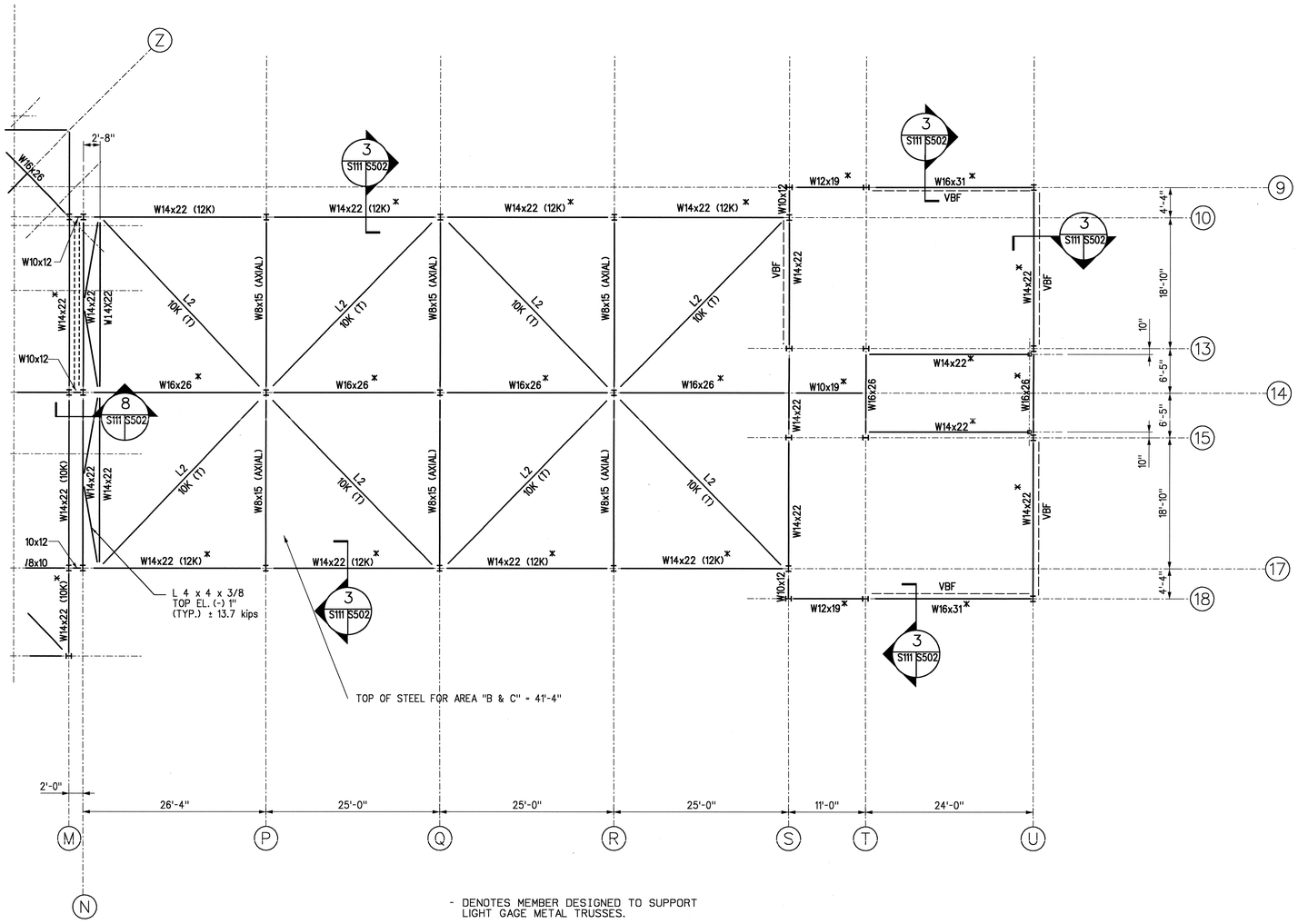

- DENOTES MEMBER DESIGNED TO SUPPORT LIGHT GAGE METAL TRUSSES.

1 S111 S111 PARTIAL ATTIC FRAMING PLAN AREA B & C
SCALE - 1/8" - 1'-0"

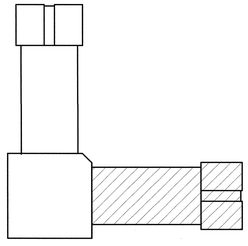

KEY PLAN
8 6 4 2 0 8 16FT
SCALE:1/8"-1'-0"

US ARMY CORPS OF ENGINEERS SAVANNAH DISTRICT

DESIGNED BY	CHECKED BY	SIZE F
CATEGORY CODE 721-81-06		
CONTRACT NO: DACA21-02-C-0046		
DATE: 23 APRIL 2003	PLOT SCALE:	

CLARK DESIGN/BUILD, LLC

SYMBOL	DESCRIPTION	DATE	BY

BASIC COMBAT TRAINEE BARRACKS COMPLEX I
FORT JACKSON, SOUTH CAROLINA
TRAINEE BARRACKS

PARTIAL ATTIC FRAMING PLAN AREA B & C

PLATE REFERENCE NUMBER: S-111
SHEET 65

DESIGN FILE: $$FILE NAME$$
$$DATE$$

CONFORMED DRAWINGS 12 /19 /03

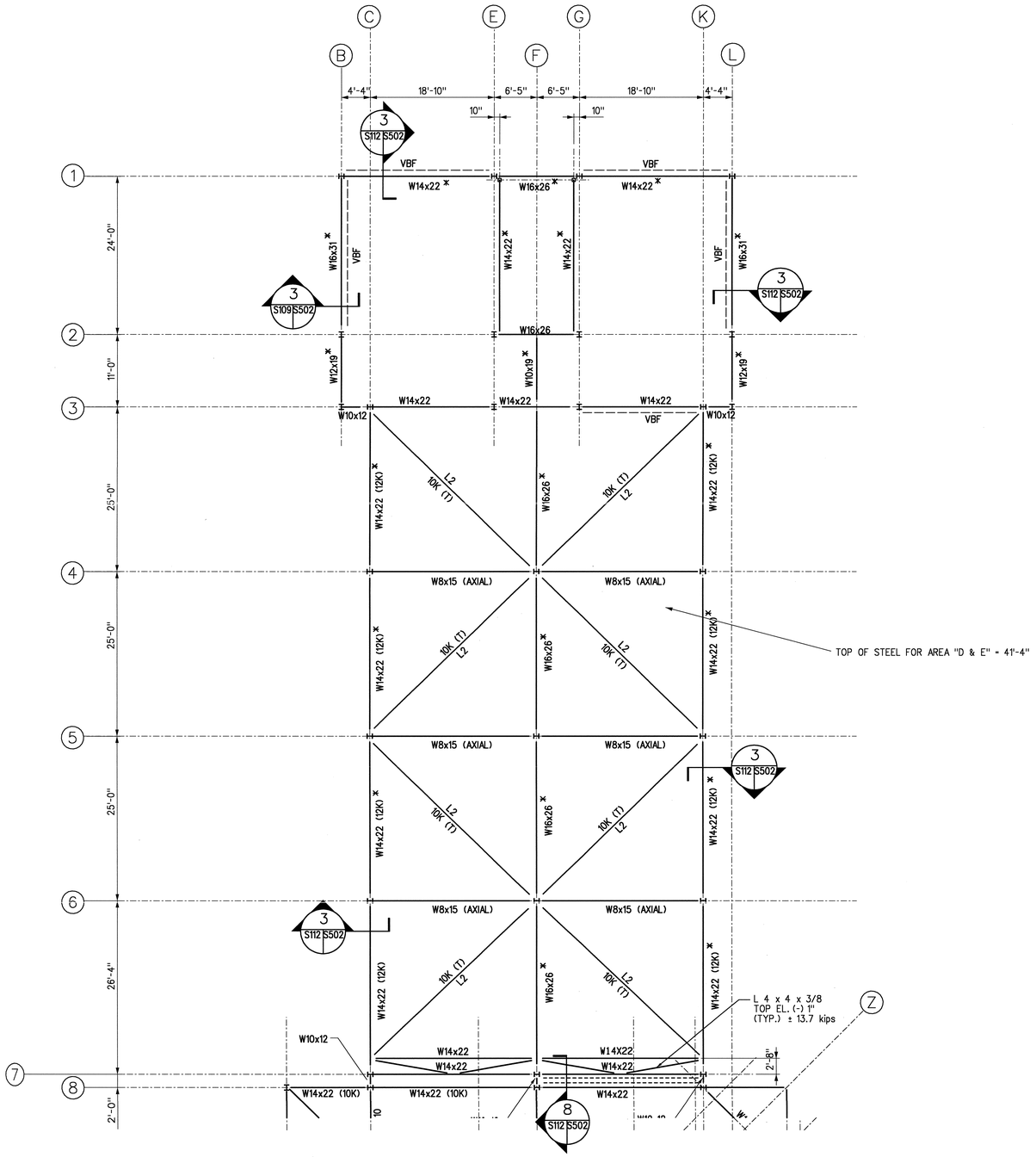

\- DENOTES MEMBER DESIGNED TO SUPPORT LIGHT GAGE METAL TRUSSES.

1 S112 S112 PARTIAL ATTIC FRAMING PLAN AREA D & E

SCALE - 1/8" - 1'-0"

NOTES

1. DASHED LINE INDICATES LOCATION OF BRACED BAY. SEE DRAWING S201 & S202
2. CONTRACTOR SHALL PROVIDE CELL CLOSURES AND POUR STOPS AS REQUIRED FOR CONCRETE DECK PLACEMENT.
3. NUMBER IN PARENTHESES AFTER BEAM MARK IS NUMBER OF FIELD APPLIED HEADED STUDS
4. SEE DWG. S-501 FOR COLUMN & BASE PLATE SCHEDULES.
5. L2= L5x5x5/16

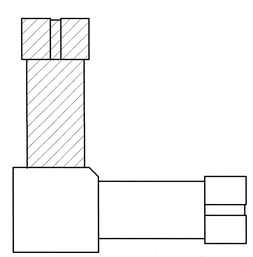

KEY PLAN

8 6 4 2 0 8 16FT

SCALE:1/8"-1'-0"

US ARMY CORPS OF ENGINEERS SAVANNAH DISTRICT

DESIGNED BY	CHECKED BY	SIZE F
CATEGORY CODE 721-81-06		
CONTRACT NO. DACA21-02-C-0046		
DATE: 23 APRIL 2003		
PLOT SCALE:		

CLARK CONSTRUCTION

CLARK DESIGN/BUILD, LLC

DESIGN FILE: $$FILE NAME$$
$$DATE$$

SYMBOL	DESCRIPTION	DATE	BY

BASIC COMBAT TRAINEE BARRACKS COMPLEX I
FORT JACKSON, SOUTH CAROLINA
TRAINEE BARRACKS

PARTIAL ATTIC FRAMING PLAN AREA D & E

PLATE REFERENCE NUMBER: S-112

SHEET 66

CONFORMED DRAWINGS 12 /19 /03

NOTES

1. ALL GABLED ROOF FRAMING IS CONSTRUCTED OF LIGHT GAGE COLD FORMED METAL AND SHALL BE ENGINEERED BY THE SUPPLIER.
2. TRUSS SUPPPORT PROVIDED WITH STEEL BEAMS ALONG COLUMN LINES A, D, F, & M. TRUSS SPACING - 4'-0" MAX.

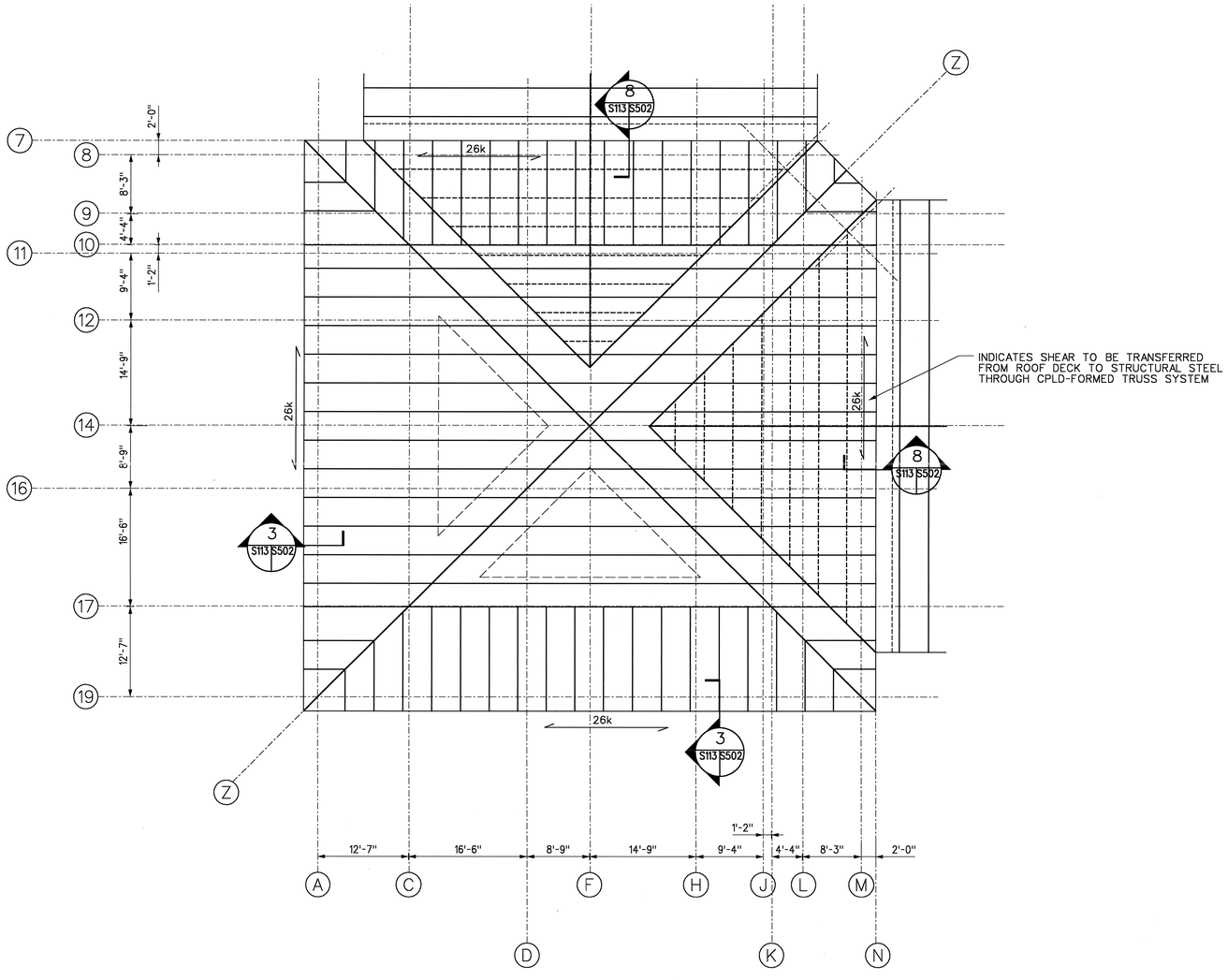

1 / S113 | S113 PARTIAL ROOF PLAN AREA A
SCALE - 1/8" - 1'-0"

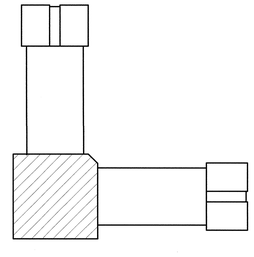

KEY PLAN

8 6 4 2 0 8 16FT
SCALE: 1/8"-1'-0"

US ARMY CORPS OF ENGINEERS SAVANNAH DISTRICT

DESIGNED BY	CHECKED BY	SIZE F
CATEGORY CODE 721-81-06		
CONTRACT NO: DACA21-02-C-0046		
DATE: 23 APRIL 2003	PLOT SCALE: 1	

CLARK DESIGN/BUILD, LLC

DATE	BY	DESCRIPTION	SYMBOL

BASIC COMBAT TRAINEE BARRACKS COMPLEX I
FORT JACKSON, SOUTH CAROLINA
TRAINEE BARRACKS

PARTIAL ROOF FRAMING PLAN AREA A

PLATE REFERENCE NUMBER: S-113

SHEET 67

DESIGN FILE: $$FILE NAME$$
$$DATE$$

CONFORMED DRAWINGS 12 /19 /03

NOTES

1. ALL GABLED ROOF FRAMING IS CONSTRUCTED OF LIGHT GAGE COLD FORMED METAL.

2. TRUSS SUPPPORT PROVIDED WITH STEEL BEAMS ALONG COLUMN LINES 9, 10, 13, 14, 15, 17, 18, & U. TRUSS SPACING = 4'-0" MAX.

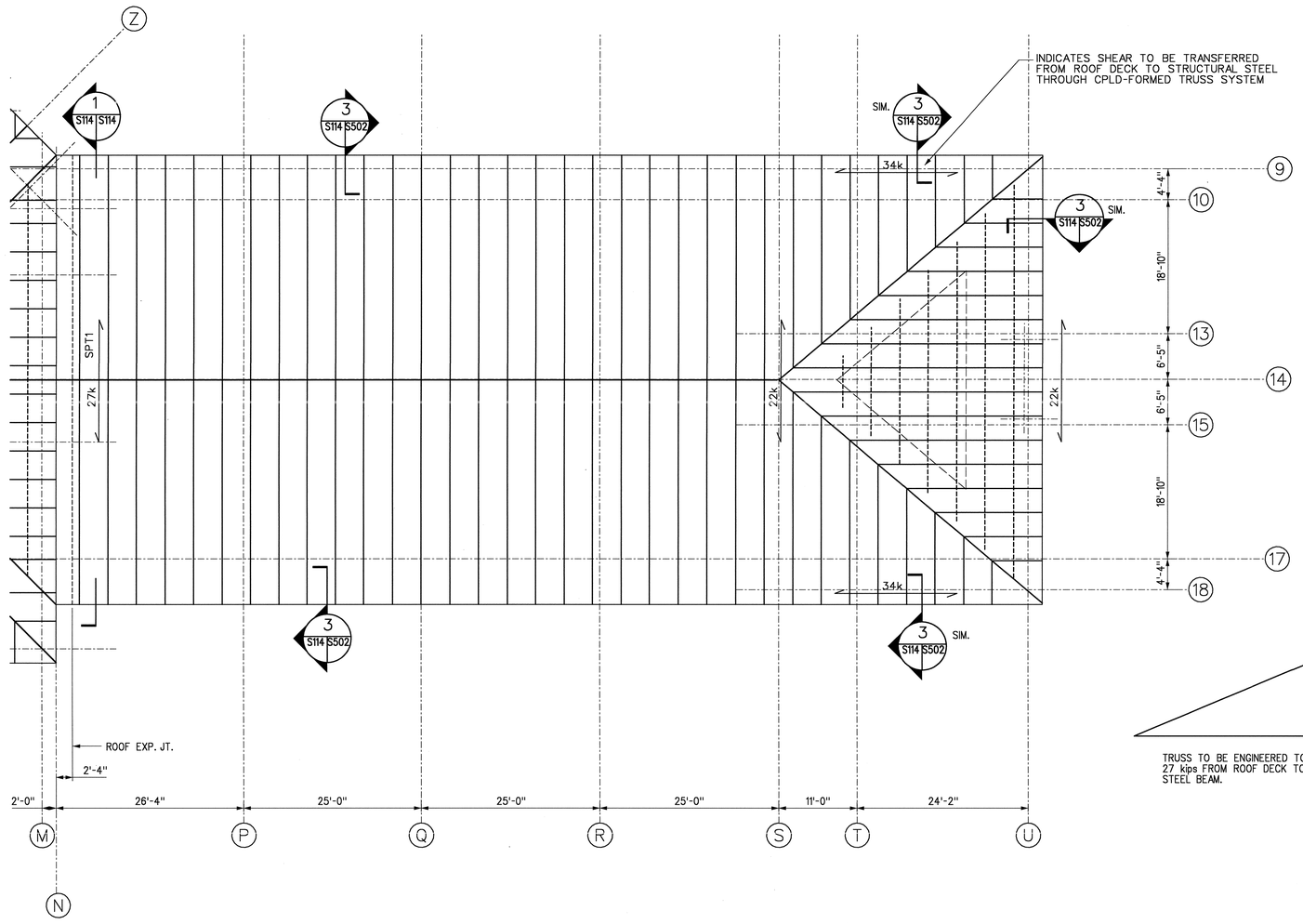

1 S114 S114 PARTIAL ROOF PLAN AREA B & C
SCALE - 1/8" - 1'-0"

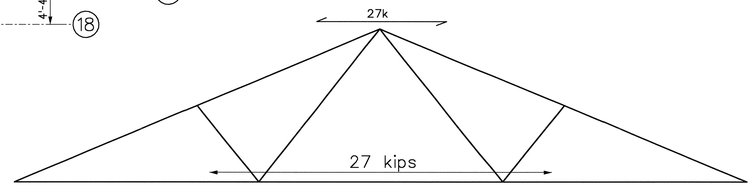

TRUSS TO BE ENGINEERED TO TRANSFER 27 kips FROM ROOF DECK TO STRUCTURAL STEEL BEAM.

SPT1

1 S114 S114 S115 SECTION
SCALE: NONE

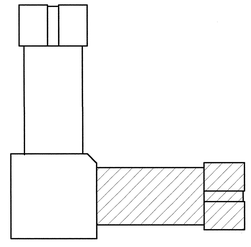

KEY PLAN

8 6 4 2 0 8 16FT
SCALE: 1/8"=1'-0"

US ARMY CORPS OF ENGINEERS
SAVANNAH DISTRICT

DESIGNED BY	CHECKED BY	SIZE F
CATEGORY CODE 721-81-06		
CONTRACT NO: DACA21-02-C-0046		
DATE: 23 APRIL 2003	PLOT SCALE: 1	

CLARK DESIGN/BUILD, LLC

DESIGN FILE: $$FILE NAME$$
$$DATE$$

SYMBOL	DESCRIPTION	DATE	BY

BASIC COMBAT TRAINEE BARRACKS COMPLEX I
FORT JACKSON, SOUTH CAROLINA
TRAINEE BARRACKS

PARTIAL ROOF FRAMING PLAN AREA B & C

PLATE REFERENCE NUMBER:
S-114
SHEET 68

CONFORMED DRAWINGS 12 /19 /03

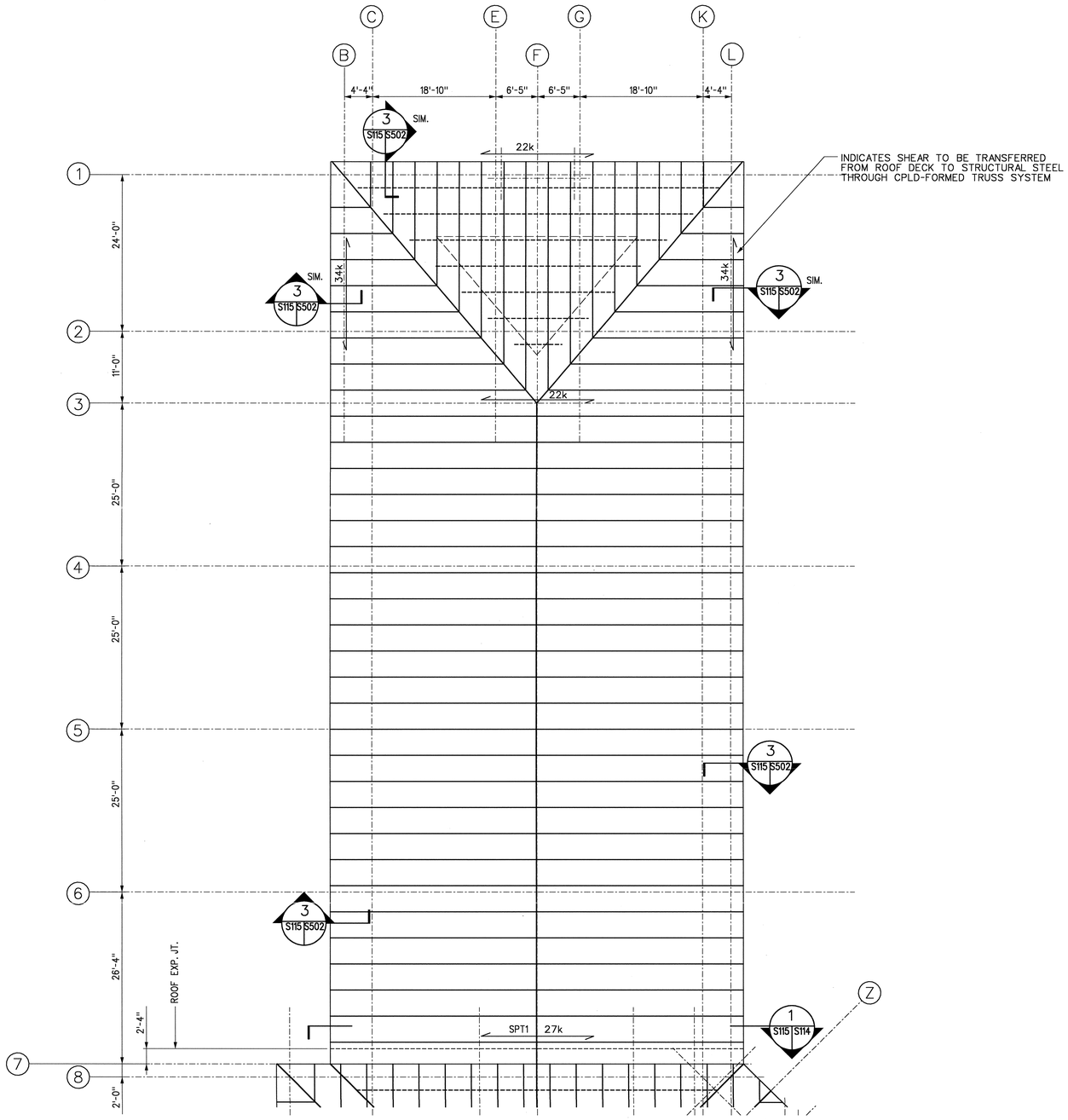

1 S115 S115 PARTIAL ROOF PLAN AREA D & E

SCALE - 1/8" - 1'-0"

NOTES

1. ALL GABLED ROOF FRAMING IS CONSTRUCTED OF LIGHT GAGE COLD FORMED METAL.

2. TRUSS SUPPPORT PROVIDED WITH STEEL BEAMS ALONG COLUMN LINES B, C, E, F, G, K, L, & 1. TRUSS SPACING = 4'-0" MAX.

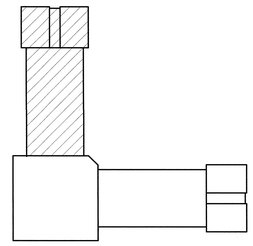

KEY PLAN

8 6 4 2 0 8 16FT

SCALE:1/8"=1'-0"

US ARMY CORPS OF ENGINEERS
SAVANNAH DISTRICT

DESIGNED BY	CHECKED BY	SIZE F
CATEGORY CODE 721-81-06		
CONTRACT NO: DACA21-02-C-0046		
DATE: 23 APRIL 2003	PLOT SCALE: 1	

CLARK DESIGN/BUILD, LLC

SYMBOL	DESCRIPTION	DATE	BY

BASIC COMBAT TRAINEE BARRACKS COMPLEX I
FORT JACKSON, SOUTH CAROLINA
TRAINEE BARRACKS

PARTIAL ROOF FRAMING PLAN AREA D & E

PLATE REFERENCE NUMBER:
S-115

SHEET 69

DESIGN FILE: $$FILE NAME$$
$$DATE$$

CONFORMED DRAWINGS 12 /19 /03

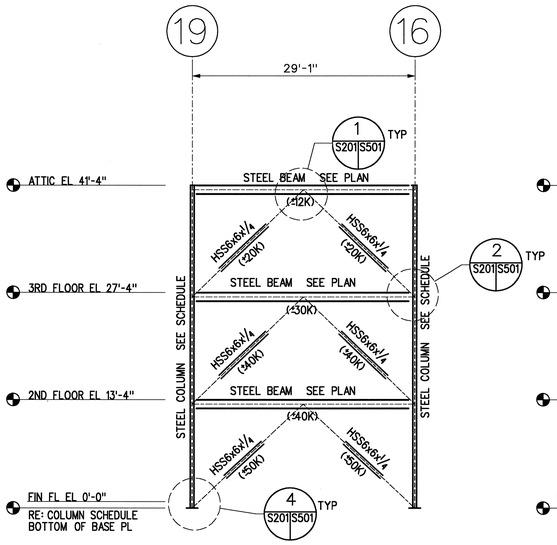

A S104 S201 S107 S110 FRAMING ELEV. COL LINE A
SCALE = 1/8" = 1'-0"

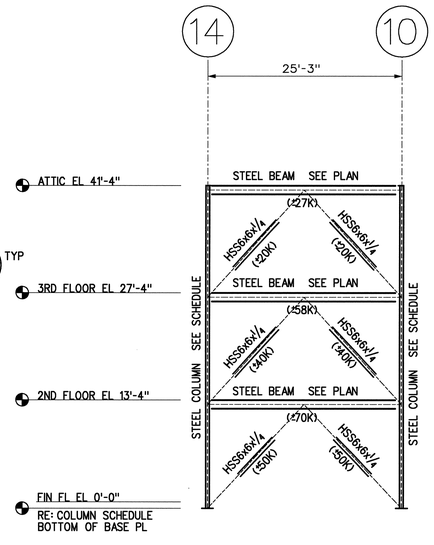

B S104 S201 S107 S110 FRAMING ELEV, COL LINE M
SCALE = 1/8" = 1'-0"

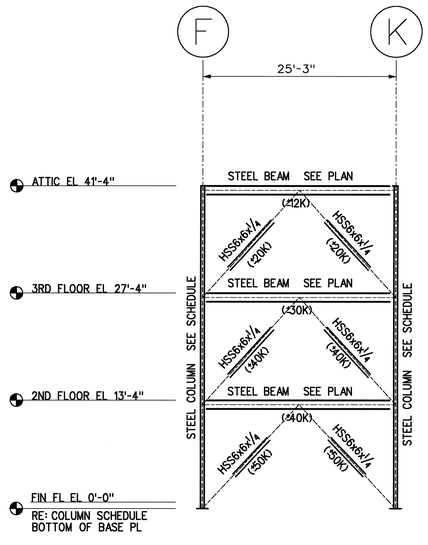

C S104 S201 S107 S110 FRAMING ELEV, COL LINE 8
SCALE = 1/8" = 1'-0"

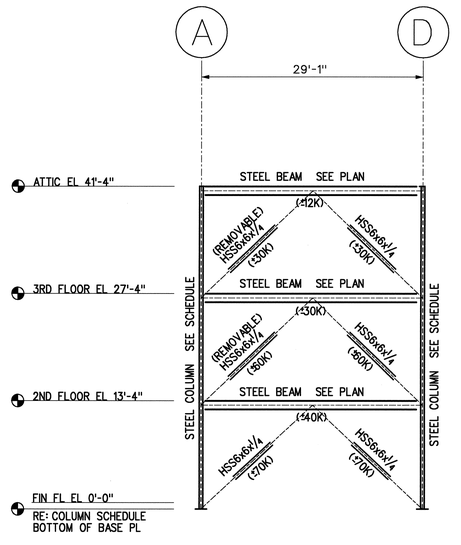

D S104 S201 S107 S110 FRAMING ELEV, COL LINE 19
SCALE = 1/8" = 1'-0"

NOTES:

1. ALL LOADS PROVIDED ON FRAMING ELEVATIONS ARE UNFACTORED LOADS. APPROPRIATE LOAD FACTORS SHOULD BE APPLIED FOR CONNECTION DESIGN USING LRFD.
2. ± DENOTES LOADS THAT ARE TENSION AND COMPRESSION LOADS.
3. CONNECTIONS SHALL BE DESIGNED FOR THE WORST CASE COMBINATION OF TENSION AND COMPRESSION.

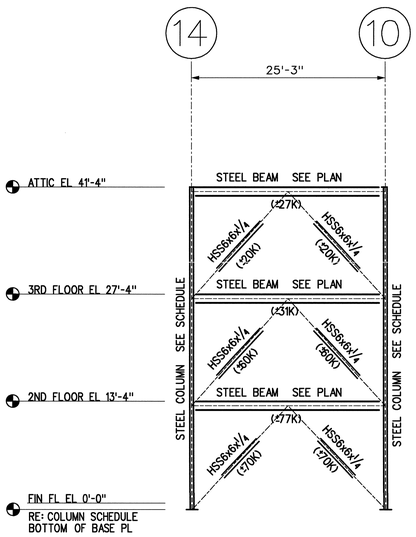

E S104 S201 S107 S110 FRAMING ELEV, COL LINE N
SCALE = 1/8" = 1'-0"

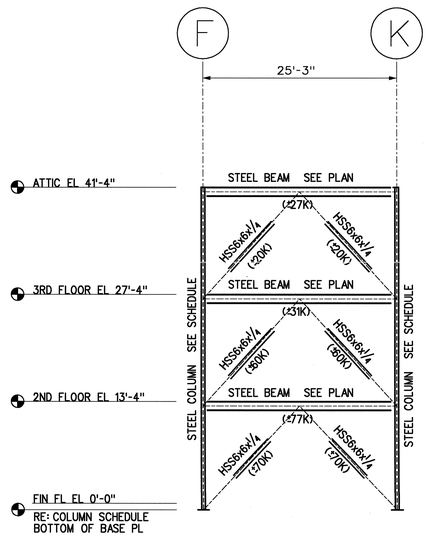

F S104 S201 S107 S110 FRAMING ELEV, COL LINE 7
SCALE = 1/8" = 1'-0"

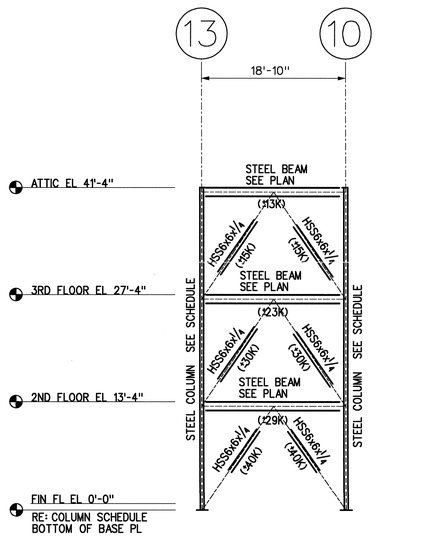

G S105 S201 S108 S111 FRAMING ELEV, COL LINE S
SCALE = 1/8" = 1'-0"

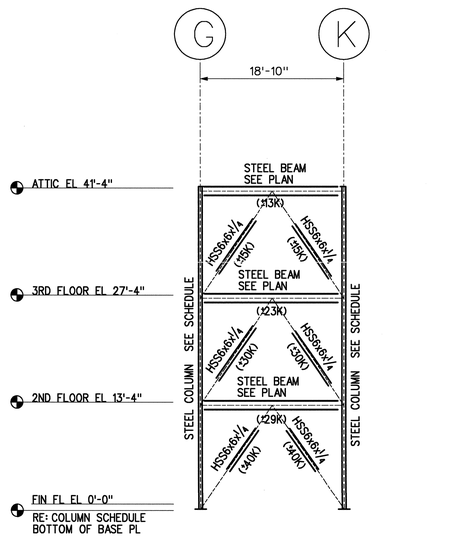

H S106 S201 S109 S112 FRAMING ELEV, COL LINE 3
SCALE = 1/8" = 1'-0"

8 6 4 2 0 8 16FT
SCALE: 1/8"=1'-0"

US ARMY CORPS OF ENGINEERS SAVANNAH DISTRICT

DESIGNED BY	CHECKED BY	SIZE F.
CATEGORY CODE 721-81-06		
CONTRACT NO. DACA21-02-C-0046		
DATE: 23 APRIL 2003		
PLOT SCALE:		

CLARK DESIGN/BUILD, LLC

DATE	BY	DESCRIPTION	SYMBOL

BASIC COMBAT TRAINEE BARRACKS COMPLEX I
FORT JACKSON, SOUTH CAROLINA
TRAINEE BARRACKS

FRAMING ELEVATIONS AND BRACING

PLATE REFERENCE NUMBER: S-201

SHEET 70

DESIGN FILE: $$FILE NAME$$
$$DATE$$

CONFORMED DRAWINGS 12 /19 /03

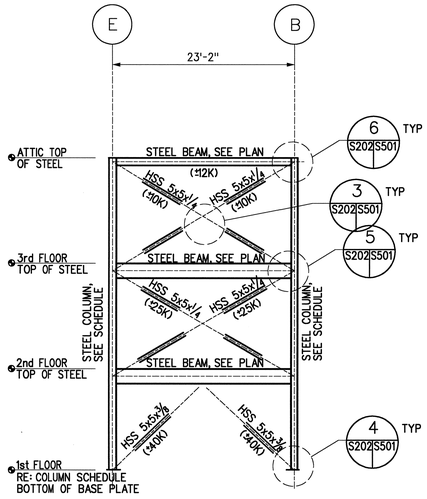

A S106 S202 S109 S112 FRAMING ELEV. COL LINE 1
SCALE - 1/8" - 1'-0"

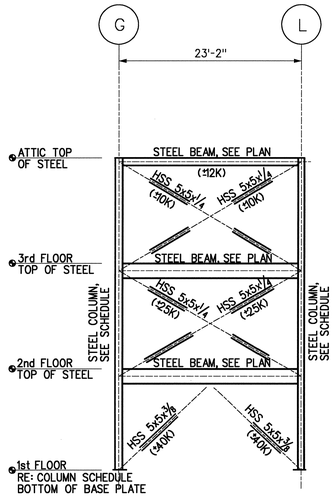

B S106 S202 S109 S112 FRAMING ELEV. COL LINE 1
SCALE - 1/8" - 1'-0"

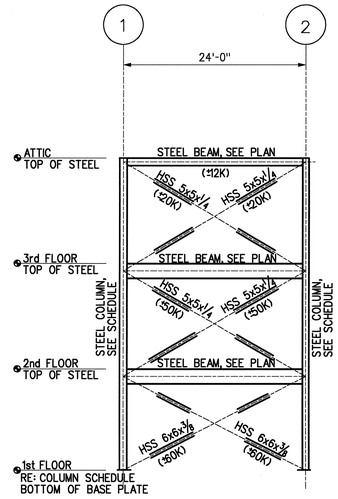

C S106 S202 S109 S112 FRAMING ELEV, COL LINE B
SCALE - 1/8" - 1'-0"

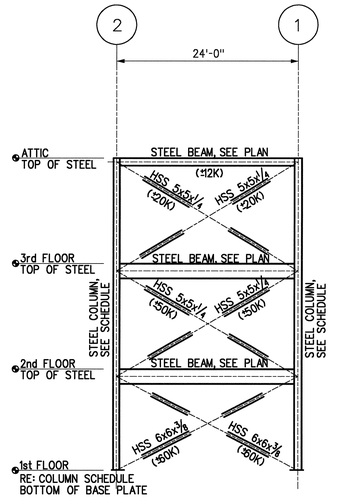

D S106 S202 S109 S112 FRAMING ELEV, COL LINE L
SCALE - 1/8" - 1'-0"

NOTES:

1. ALL LOADS PROVIDED ON FRAMING ELEVATIONS ARE UNFACTORED LOADS. APPROPRIATE LOAD FACTORS SHOULD BE APPLIED FOR CONNECTION DESIGN USING LRFD.
2. ± DENOTES LOADS THAT ARE TENSION AND COMPRESSION LOADS.
3. CONNECTIONS SHALL BE DESIGNED FOR THE WORST CASE COMBINATION OF TENSION AND COMPRESSION.

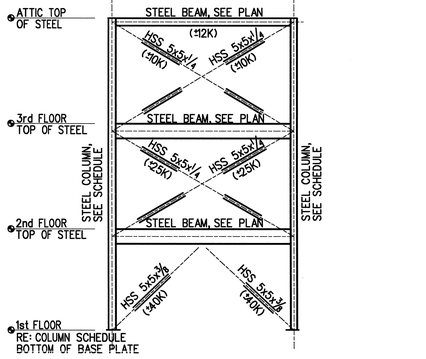

E S105 S202 S108 S111 FRAMING ELEV, COL LINE U
SCALE - 1/8" - 1'-0"

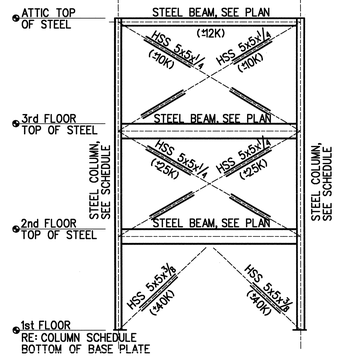

F S105 S202 S108 S111 FRAMING ELEV, COL LINE U
SCALE - 1/8" - 1'-0"

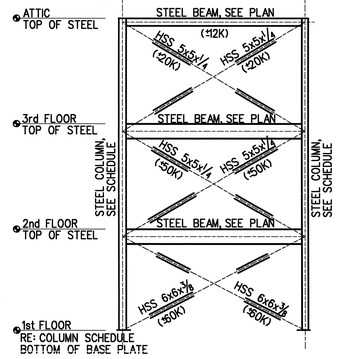

G S105 S202 S108 S111 FRAMING ELEV, COL LINE 9
SCALE - 1/8" - 1'-0"

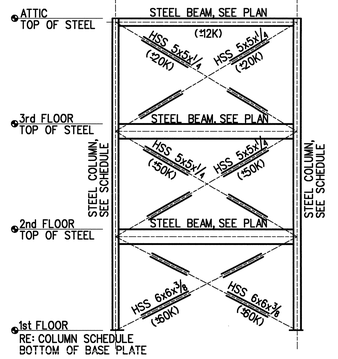

H S105 S202 S108 S111 FRAMING ELEV, COL LINE 18
SCALE - 1/8" - 1'-0"

US ARMY CORPS OF ENGINEERS SAVANNAH DISTRICT

DESIGNED BY	CHECKED BY	SIZE F
CATEGORY CODE 721-81-06		
CONTRACT NO: DACA21-02-C-0046		
DATE: 23 APRIL 2003	PLOT SCALE: 1	

CLARK CONSTRUCTION
CLARK DESIGN/BUILD, LLC

NO	DATE	BY	DESCRIPTION	SYMBOL

DESIGN FILE: $$FILE NAME$$
$$DATE$$

BASIC COMBAT TRAINEE BARRACKS COMPLEX I
FORT JACKSON, SOUTH CAROLINA
TRAINEE BARRACKS

FRAMING ELEVATIONS AND BRACING

PLATE REFERENCE NUMBER:
S-202
SHEET 71

8 6 4 2 0 8 16FT
SCALE: 1/8"=1'-0"

CONFORMED DRAWINGS 12 /19 /03

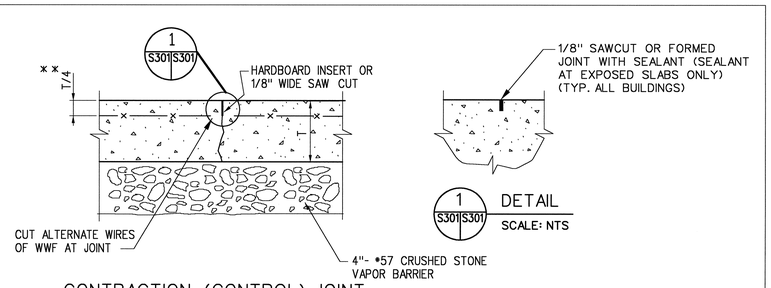

CONTRACTION (CONTROL) JOINT

1 S301 S301 DETAIL
SCALE: NTS

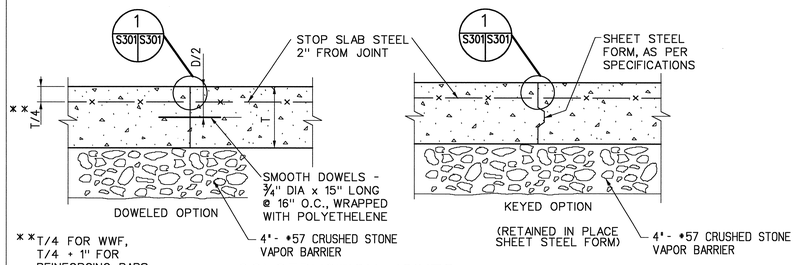

CONSTRUCTION JOINTS

SLAB-ON-GRADE DETAILS

NO SCALE

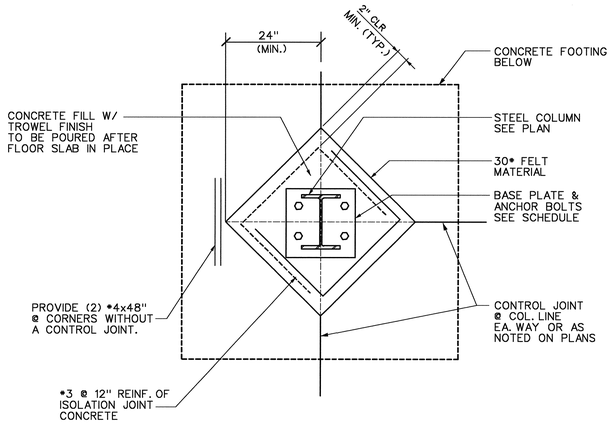

2 S301 S301 TYPICAL INTERIOR STEEL COLUMN BASE DETAIL
SCALE: NONE

US ARMY CORPS
OF ENGINEERS
SAVANNAH DISTRICT

DESIGNED BY	CHECKED BY	SIZE F
CATEGORY CODE 721-81-06		
CONTRACT NO: DACA21-02-C-0046		
DATE: 23 APRIL 2003	PLOT SCALE: 1	

CLARK DESIGN/BUILD, LLC

DESIGN FILE: $$FILE NAME$$
$$DATE$$

SYMBOL	DESCRIPTION	DATE	BY

BASIC COMBAT TRAINEE BARRACKS COMPLEX I
FORT JACKSON, SOUTH CAROLINA
TRAINEE BARRACKS

FOUNDATION DETAILS

PLATE REFERENCE NUMBER:
S-301
SHEET 72

CONFORMED DRAWINGS 12 /19 /03

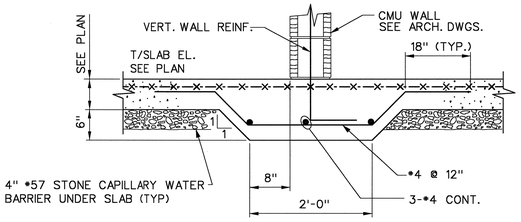

1 SECTION
S101 S302 S102 S103
SCALE - 1" - 1'-0"

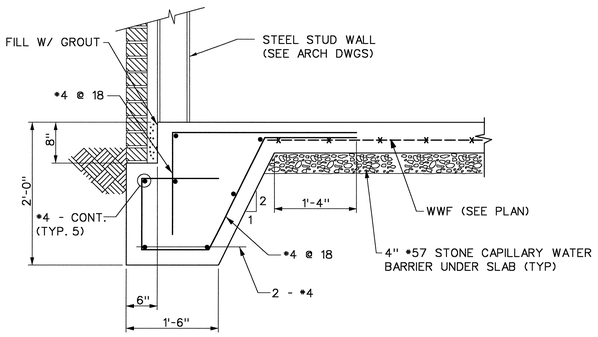

2 SECTION
S101 S302 S102 S103
SCALE - 1" - 1'-0"

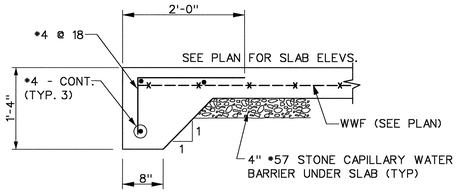

3 SECTION
S101 S302 S102 S103
SCALE - 1" - 1'-0"

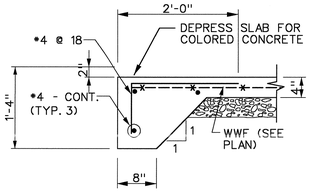

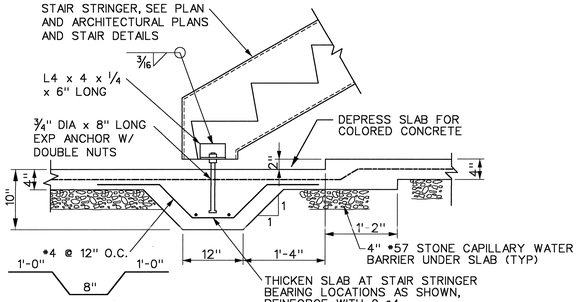

4 SECTION
S101 S302 S102 S103
SCALE - 1" - 1'-0"

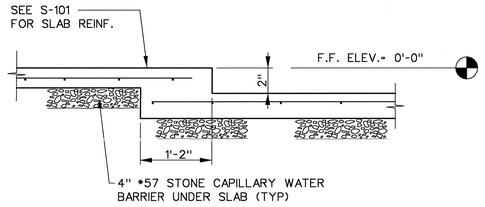

5 SECTION
S101 S302
SCALE - 1" - 1'-0"

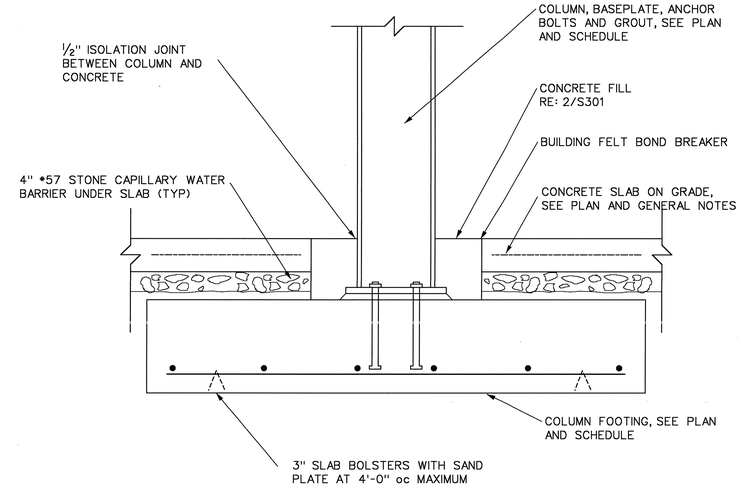

CENTER FOOTING ON STEEL COLUMN ABOVE, UNLESS NOTED OTHERWISE

6 TYPICAL INTERIOR STEEL COLUMN BASE WITHOUT CONCRETE COLUMN PEDESTAL
S101 S302 S102 S103
SCALE - 1" - 1'-0"

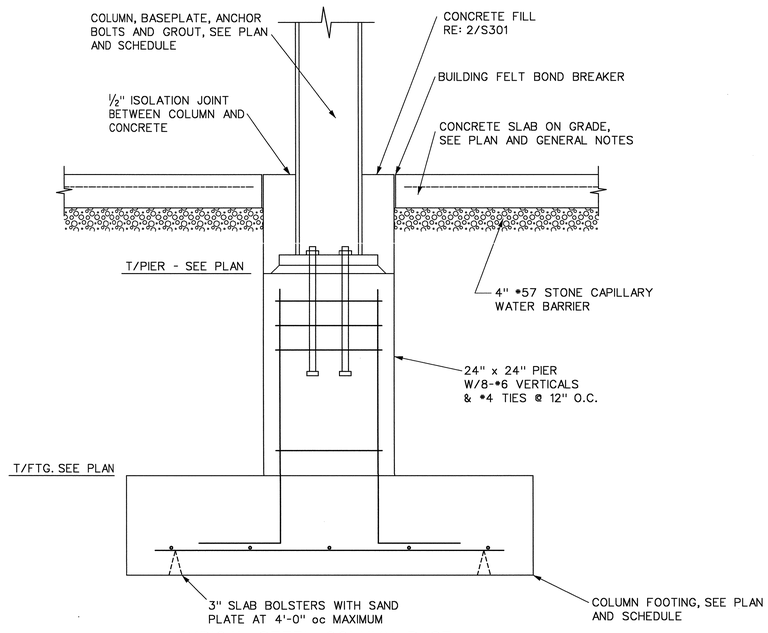

7 TYPICAL STEEL COLUMN BASE WITH CONCRETE COLUMN PEDESTAL
S101 S302
SCALE - 1" - 1'-0"

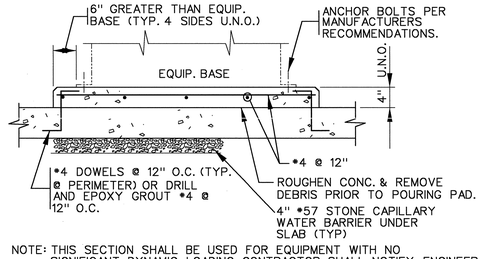

NOTE: THIS SECTION SHALL BE USED FOR EQUIPMENT WITH NO SIGNIFICANT DYNAMIC LOADING. CONTRACTOR SHALL NOTIFY ENGINEER CONCERNING EQUIPMENT THAT MAY IMPART DYNAMIC LOADING TO THE FOUNDATION AND OBTAIN APPROVAL PRIOR TO FABRICATION OR CONSTRUCTION.

8 SECTION
S302 S302
SCALE: 3/4" - 1'-0"

1 0 1 2FT
SCALE: 3/4"=1'-0"

1 0 1 2FT
SCALE: 1 "=1'-0"

US ARMY CORPS
OF ENGINEERS
SAVANNAH DISTRICT

DESIGNED BY	CHECKED BY	SIZE F
CATEGORY CODE 721-81-06		
CONTRACT NO. DACA21-02-C-0046		
DATE: 23 APRIL 2003		
PLOT SCALE: .		

CLARK CONSTRUCTION
CLARK DESIGN/BUILD, LLC

SYMBOL	DESCRIPTION	DATE	BY

BASIC COMBAT TRAINEE BARRACKS COMPLEX I
FORT JACKSON, SOUTH CAROLINA
TRAINEE BARRACKS

SECTIONS AND DETAILS

PLATE REFERENCE NUMBER:
S-302
SHEET 73

DESIGN FILE: $$FILE NAME$$
$$DATE$$

CONFORMED DRAWINGS 12 /19 /03

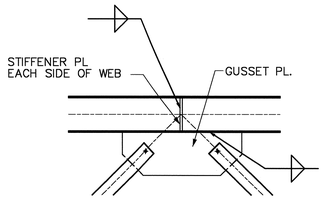

1 S201 S501 DETAIL SCALE = NONE

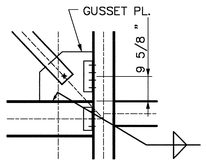

2 S201 S501 DETAIL SCALE = NONE

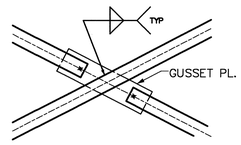

3 S202 S501 DETAIL SCALE = NONE

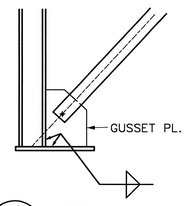

4 S201 S501 S202 DETAIL SCALE = NONE

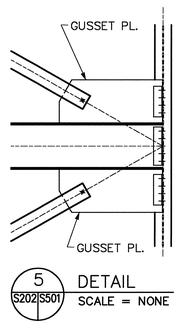

5 S202 S501 DETAIL SCALE = NONE

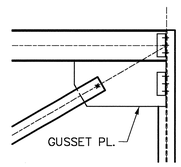

6 S202 S501 DETAIL SCALE = NONE

NOTE:
FABRICATOR SHALL INDICATE ANY WELDS FPR BRACING THAT ARE LOADED TO LESS THAN 50%.

US ARMY CORPS OF ENGINEERS
SAVANNAH DISTRICT

DESIGNED BY	CHECKED BY	SIZE
R.S.	J.K.J.	F

CATEGORY CODE 721-81-06
CONTRACT NO: DACA21-02-C-0046
DATE: 03 DEBRL20003
PLOT SCALE: :

CLARK CONSTRUCTION
CLARK DESIGN/BUILD, LLC

DESIGN FILE: $$FILE NAME$$
$$DATE$$

SYMBOL	DESCRIPTION	DATE	BY

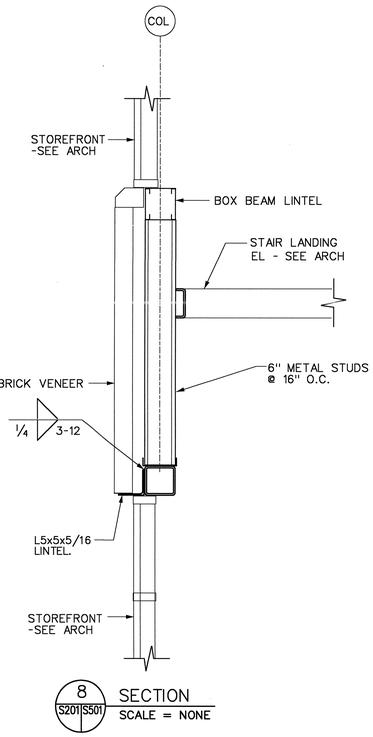

8 S201 S501 SECTION SCALE = NONE

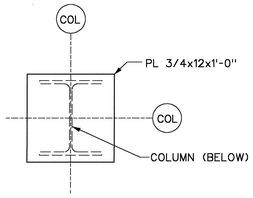

9 S201 S501 DETAIL SCALE = NONE

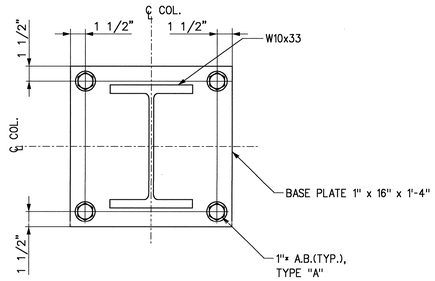

TYPICAL GRAVITY COLUMN BASE PLATE

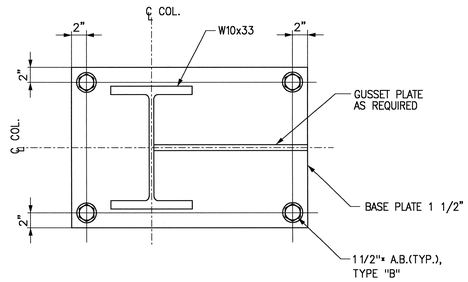

TYPICAL BASE PLATE FOR VERTICALLY BRACED COLUMNS

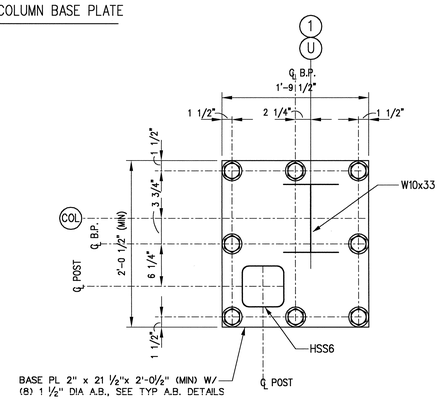

10 S102 S501 S103 DETAIL SCALE = NONE

COLUMN SCHEDULE

ATTIC EL. 41'-4"					1'-0"
3 RD FLOOR EL. 27'-4"			W10x33		
2 ND FLOOR EL. 13'-4"			BEAM		
FINISH FLOOR EL. 0'-0"	W10x33	W10x33	X106 TUBE SEE NOTE BELOW	HSS 8x8x?	W10x33
* BOT/BASE PL.					
COLUMN LOCATION	TYPICAL UNLESS NOTED OTHERWISE	C-16, D-16, C-11, D-11, F-12, H-14, J-16, J-17	F-4, F-5 F-6, P-14, Q-14, R-14	COLUMNS AT MAIN ENTRANCE	A-19, D-19, A16, F-14

* BOT/BASE PL. @ INTERIOR COLUMNS (–) 11"
* BOT/BASE PL. @ EXTERIOR COLUMNS (–) 1'-3"

X106 - 2 HR, TUBE O.D. 8"x8" W/ 1/4" WALL THICKNESS. SUPPLIED BY "FIRE-TROL" OR EQUAL. COLUMN SHALL BE PRIMED IN SHOP.

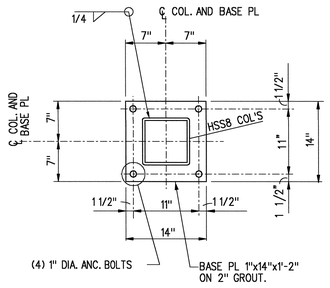

TYP. BASE PLATE FOR HSS8 COLUMNS

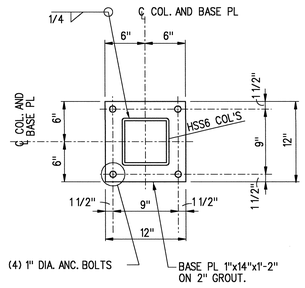

TYP. BASE PLATE FOR HSS6 COLUMNS

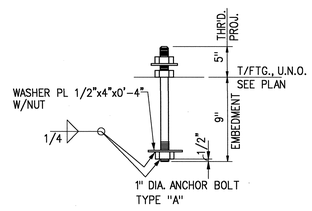

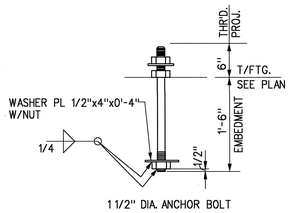

NOTE: BASE PLATES SIT ON 2" GROUT, U.N.O.

TYP. ANCHOR BOLT DETAILS

BASIC COMBAT TRAINEE BARRACKS COMPLEX I
FORT JACKSON, SOUTH CAROLINA
TRAINEE BARRACKS

STEEL SECTIONS AND DETAILS

PLATE REFERENCE NUMBER:
S-501
SHEET 74

CONFORMED DRAWINGS 12 /19 /03

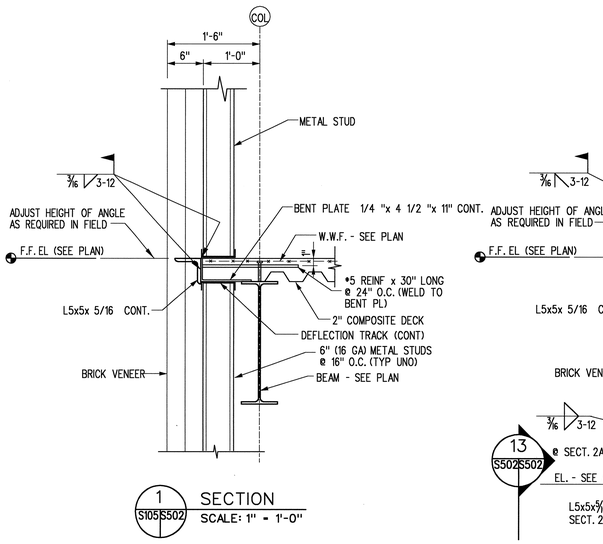

1 SECTION
S105 S502
SCALE: 1" = 1'-0"

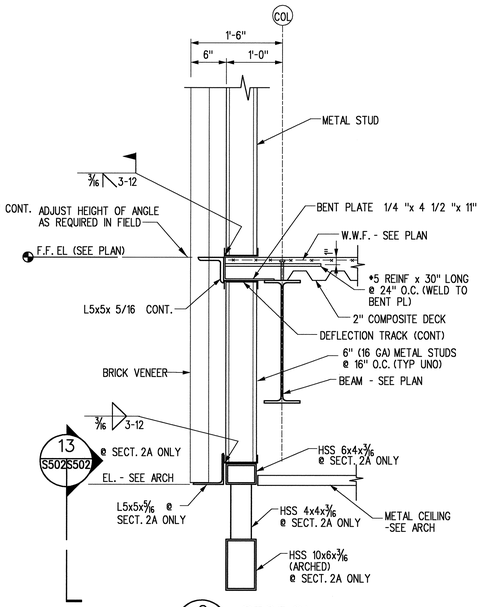

2 SECTION
S105 S502
S106
S108
S109
SCALE: 1" = 1'-0"

2A SECTION
S105 S502
S106
SCALE: 1" = 1'-0"

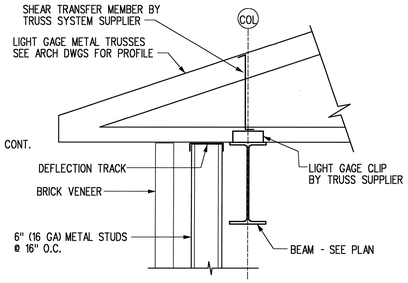

3 SECTION
S110 S502
S111
S112
SCALE: 1" = 1'-0"

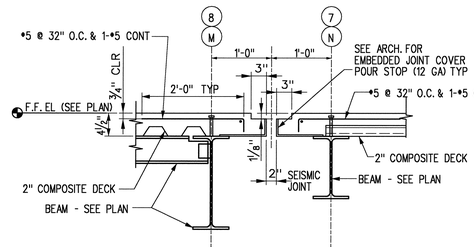

4 SECTION
S104 S105 S502
S106 S107
S108 S109
SCALE: 1" = 1'-0"

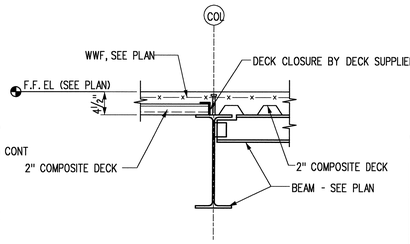

5 SECTION
S104 S105 S502
S106 S107
S108 S109
SCALE: 1" = 1'-0"

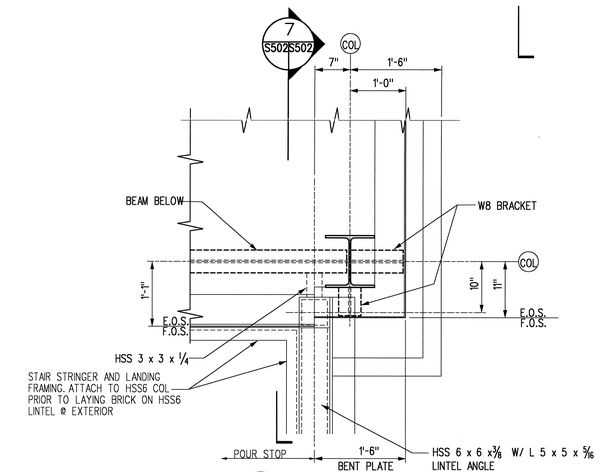

6 DETAIL
S105 S502
S106
S108
S109
SCALE: 1" = 1'-0"

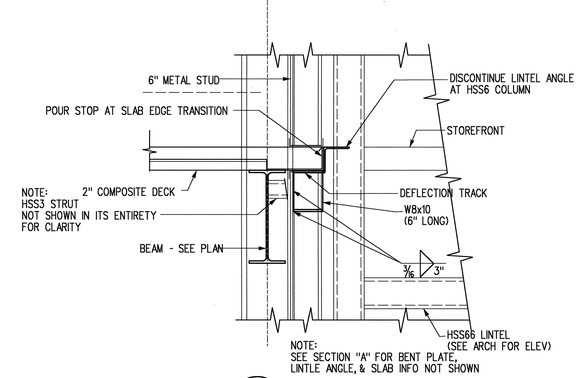

7 SECTION
S502 S502
SCALE: 1" = 1'-0"

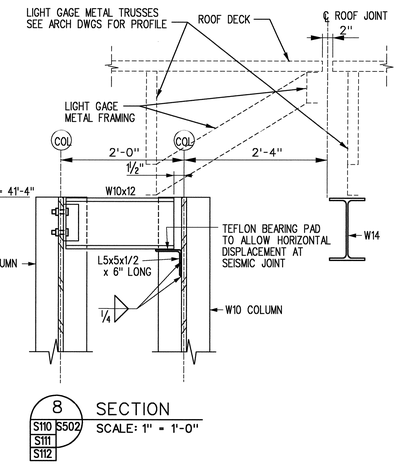

8 SECTION
S110 S502
S111
S112
SCALE: 1" = 1'-0"

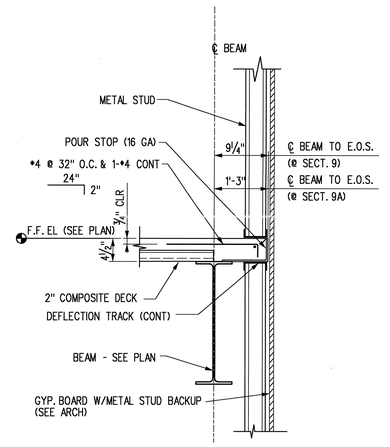

9 SECTION
S104 S502
S107
SCALE: 1" = 1'-0"

9A SECTION
S104 S502
S107
SCALE: 1" = 1'-0"

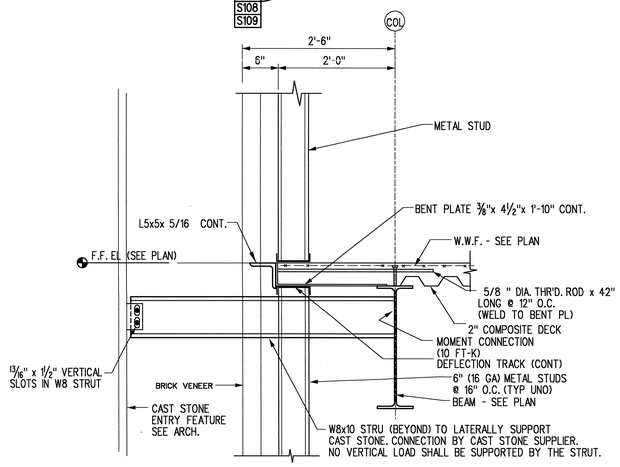

10 SECTION
S104 S502
S107
SCALE: 1" = 1'-0"

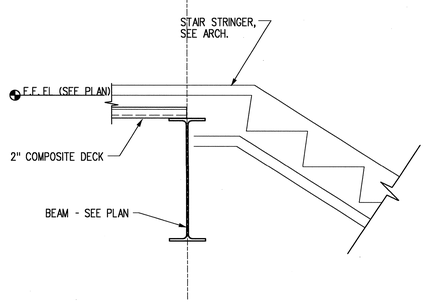

11 SECTION
S104 S502
S107
SCALE: 1" = 1'-0"

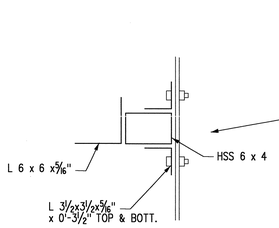

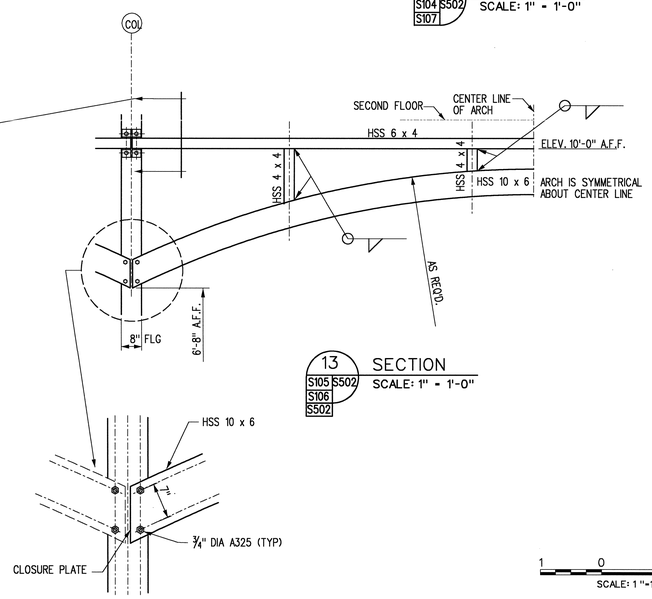

13 SECTION
S105 S502
S106
S502
SCALE: 1" = 1'-0"

1 0 1 2FT
SCALE: 1 "=1'-0"

US ARMY CORPS OF ENGINEERS
SAVANNAH DISTRICT

DESIGNED BY	CHECKED BY	SIZE
R.S.	J.K.J.	F

CATEGORY CODE 721-81-06
CONTRACT NO. DACA21-02-C-0046
DATE: 03 MARCH 2003
PLOT SCALE: 1

CLARK CONSTRUCTION
CLARK DESIGN/BUILD, LLC

SYMBOL	DESCRIPTION	DATE	BY

BASIC COMBAT TRAINEE BARRACKS COMPLEX I
FORT JACKSON, SOUTH CAROLINA
TRAINEE BARRACKS

STEEL SECTIONS AND DETAILS

PLATE REFERENCE NUMBER:
S-502

SHEET 75

DESIGN FILE: $$FILE NAME$$
$$DATE$$

CONFORMED DRAWINGS 12 /19 /03

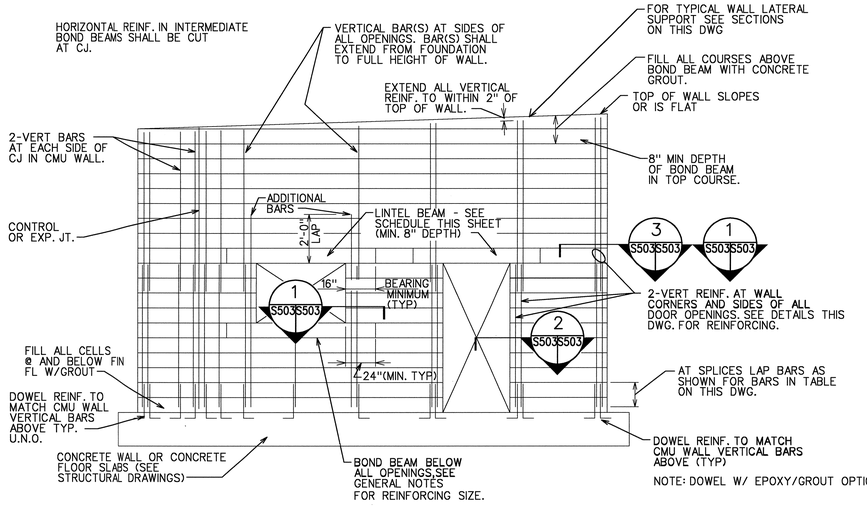

TYPICAL ELEVATION AT CMU WALL (EXTERIOR / INTERIOR)

SCALE:NONE

NOTE: SEE ARCH PLAN DWGS FOR CMU WALLS.
WALL REINFORCING SHOWN ABOVE IS MIN. REQUIRED IN WALLS.
ADDITIONAL WALL REINFORCING SIZES AND SPACING ARE GIVEN IN CMU WALL REINF. SCHEDULE, SECTIONS AND DETAILS.

MAXIMUM CMU WALL UNSUPPORTED HEIGHT OR LENGTH			
	WALL THICKNESS	EXTERIOR WALL NON-LOAD BEARING	INTERIOR NON-LOAD BEARING WALL
MAX HEIGHT OR LENGTH BETWEEN BETWEEN SUPPORTS	8"	12'-0"	24'-0"

NOTE: CMU WALL MAXIMUM LATERAL SUPPORT SPACING GIVEN IN SECTIONS AND DETAILS SHALL SUPERCEDE THE ABOVE SCHEDULE REQUIREMENTS.

BRICK/BLOCK LINTEL SCHEDULE		
SPAN	4" BRICK/BLOCK	8" BLOCK
SPANS UP TO 5'-0"	1 – L5 x 5 x ?	SEE CMU LINTEL SCHEDULE
5'-0" TO 7'-0"	1 – L5 x 5 x ?	SEE CMU LINTEL SCHEDULE
7'-0" TO 8'-0"	1 – L5 x 5 x ?	SEE CMU LINTEL SCHEDULE
8'-0" TO 9'-0"	1 – L5 x 5 x ?	SEE CMU LINTEL SCHEDULE
9'-0" TO 14'-0"	L 5 x 5 x ? AND C6x8.2 – SEE DET 12/S503	

NOTE: MINIMUM BEARING 6" UNLESS NOTED

TYPICAL MIN. CMU WALL REINFORCING					
WALL THICKNESS	VERT BARS MIN SIZE MAX SPACING	BOND BEAM		REMARKS	COMMENTS
		BAR SIZE	MAX.SPACING		
8"	1–#4@48" (UNO)	2–#5'S	4'–0"		ALL WALLS UNLESS NOTED OTHERWISE
8"	1–#5@24" (UNO)	2–#5'S	8'–0'	NOTE 1	

NOTE: 1. REINFORCING SIZES AND SPACING GIVEN IN SECTIONS AND DETAILS SHALL SUPERCEDE THE ABOVE SCHEDULE REQUIREMENTS.

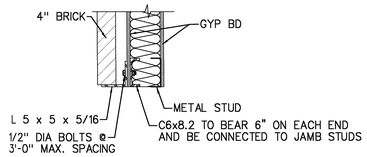

12 S503 S503 DETAIL
SCALE: 1" = 1'-0"

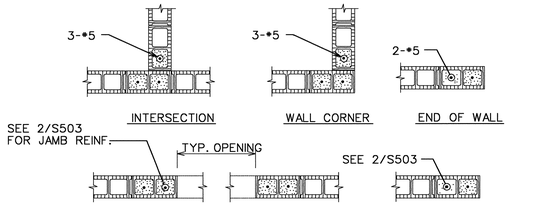

TYPICAL CONCRETE MASONRY UNIT DETAILS

1 S503 S503 SECTION
SCALE: NONE

VERT REINF EACH CELL: (2 CELLS)
2-#5 FOR OPNG WIDTH TO 4'-0"
2-#7 FOR OPNG WIDTH TO 8'-0"
2-#8 FOR OPNG WIDTH TO 12'-0"
UNLESS MODIFIED ON PLAN

HORIZ JOINT REINF NOT SHOWN FOR CLARITY

NOTE:
OPNG WIDTH SHALL NOT EXCEED 12'-0" FOR THIS TYPE OF JAMB

2 S503 S503 JAMB DETAIL
SCALE: NONE

NOTES:

1. ALL CMU SHALL BE REINFORCED AS INDICATED, ON PLANS, SECTIONS, DETAILS INCLUDING ADDITIONAL REINFORCING AT ALL OPENINGS. TYPICAL CONDITIONS SHOWN ON THIS DRAWING ARE GENERAL AND SHALL BE USED TO COVER ALL CONDITIONS UNO.
2. ALL WALLS SHALL BE LATERALLY SUPPORTED AT TOP OR AT INTERFACE WITH STRUCTURAL MEMBERS (TYP). UNO
3. PROVIDE 3/4" MIN. GAP BETWEEN CMU AND BOTTOM OF SLAB OR STEEL, ETC. AND PROVIDE COMPRESSIBLE FILLER IN GAP THAT MAINTAINS FIRE RATING.
4. VERTICAL REINFORCING SHALL BE CONTINUOUS THRU LINTEL OR BOND BEAMS.
5. PROVIDE 16" MINIMUM BEARING FOR ALL CMU LINTELS.
6. ALL CELLS THAT CONTAIN REINFORCING BARS SHALL BE GROUTED SOLID.
7. FOR GENERAL NOTES SEE DRAWINGS S001 AND S002.
8. ALL STRUCTURAL STEEL ROLLED SHAPES AND PLATES SHALL BE ASTM GRADE 36.

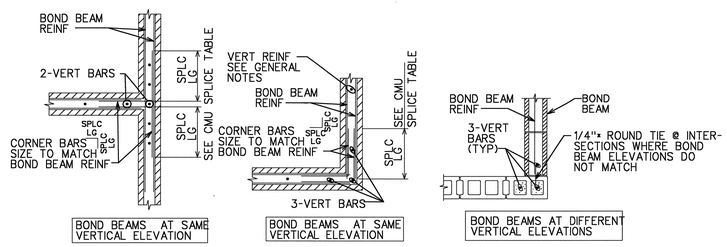

BOND BEAMS AT SAME VERTICAL ELEVATION | BOND BEAMS AT SAME VERTICAL ELEVATION | BOND BEAMS AT DIFFERENT VERTICAL ELEVATIONS

BOND BEAM REINFORCING AT WALL INTERSECTIONS

3 S503 S503 SECTION
SCALE: NONE

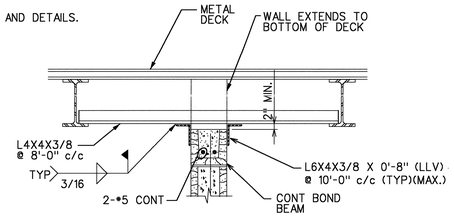

TYPICAL INTERIOR CMU WALL SUPPORT AT ROOF WALL PARALLEL TO JOIST

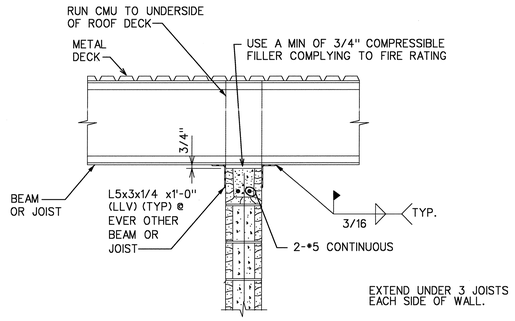

EXTEND UNDER 3 JOISTS EACH SIDE OF WALL.

TYPICAL INTERIOR CMU WALL BRACING PERPENDICULAR TO JOIST OR BEAM

4 S503 S503 SECTION
SCALE: NONE

TYPICAL CMU LINTEL SCHEDULE					
MAXIMUM CLR OPENING	WIDTH	DEPTH	HORIZONTAL REINF		MIN. BEARING @ EA. END
			BOTTOM	TOP	
4'–0"	8"	8"	2–#4	—	8
6'–0"	8"	1'–4"	2–#5	2–#4	8
8'–0"	8"	1'–4"	2–#5	2–#4	16
10'–0"	8"	1'–4"	2–#6	2–#4	16
12'–0"	8"	2'–0"	2–#6	2–#6	16
4'–0"	6"	8"	2–#4	—	8
6'–0"	6"	1'–4"	2–#5	2–#4	8
8'–0"	6"	1'–4"	2–#5	2–#4	16

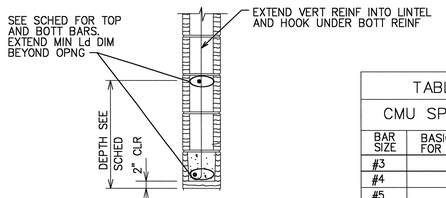

LINTEL BLOCK W/ GROUT

TABLE I CMU SPLICE TABLE	
BAR SIZE	BASIC LAP SPLICE Ld FOR CMU REINFORCING
#3	1'–6"
#4	2'–0"
#5	2'–6"
#6	3'–0"
#7	3'–6"

NOTES:

1. OPENING WIDTH SHALL NOT EXCEED 12'–0"
2. GROUT CELLS TO NOTED LINTEL DEPTH.
3. STIRRUPS SHALL HAVE 180° HOOK ON EACH END.

9 S503 S503 SECTION
SCALE: NONE

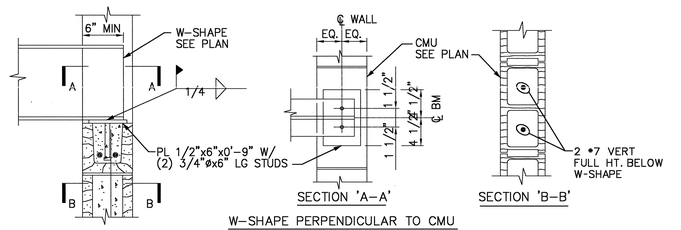

W–SHAPE PERPENDICULAR TO CMU

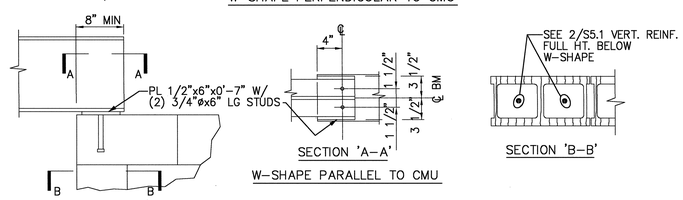

W–SHAPE PARALLEL TO CMU

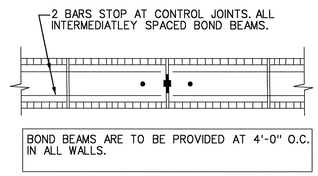

NOTE: SEE ARCH DWGS FOR CONTROL JOINT LOCATIONS

BOND BEAMS AT CONTROL JOINTS

11 S503 S503 DETAIL
SCALE: NONE

1 0 1 2FT
SCALE: 1 "=1'-0"

US ARMY CORPS OF ENGINEERS SAVANNAH DISTRICT

DESIGNED BY	CHECKED BY	SIZE F
CATEGORY CODE 721-81-06		
CONTRACT NO: DACA21-02-C-0046		
DATE: 23 APRIL 2003		
PLOT SCALE: 1		

CLARK CONSTRUCTION
CLARK DESIGN/BUILD, LLC

DESIGN FILE: $$FILE NAME$$
$$DATE$$

SYMBOL	DESCRIPTION	DATE	BY

BASIC COMBAT TRAINEE BARRACKS COMPLEX I
FORT JACKSON, SOUTH CAROLINA
TRAINEE BARRACKS

TYPICAL MASONRY SECTIONS AND DETAILS

PLATE REFERENCE NUMBER:
S-503
SHEET 76

CONFORMED DRAWINGS 12 /19 /03

Amendment 0001

Appendix K = Fort Jackson Design Files
Vol. 6 CEP Drawings Files

GENERAL NOTES

1. REFERENCE ELEVATION - COORDINATE WITH CIVIL SHEETS FOR FINISH FLOOR ELEVATIONS.
2. ALL INTERIOR FLOOR SLABS-ON-GRADE SHALL BE PLACED OVER A 6 MIL VAPOR BARRIER WHICH IS OVER A 4" CRUSHED STONE FILL.
3. THE DRAWINGS SHOWN AS THE STRUCTURAL "S" SHEETS ARE APPLICABLE FOR (1) COMPLETE BUILDING ONLY. REFER TO CIVIL SHEETS AND PROJECT SCOPE FOR TOTAL NUMBER OF BUILDINGS REQUIRED.
4. STRUCTURAL DRAWINGS ARE INTENDED TO BE USED IN CONJUNCTION WITH ENTIRE SET OF CONTRACT DRAWINGS. CONTRACTOR IS RESPONSIBLE FOR COORDINATING ALL RELATED ITEMS IN THE WORK.
5. THE CONTRACTOR SHALL VERIFY DIMENSIONS AND CONDITIONS PRIOR TO CONSTRUCTION AND NOTIFY THE CONTRACTING OFFICER'S REPRESENTATIVE OF ANY DISCREPANCIES, INCONSISTENCIES OR DIFFICULTIES AFFECTING THE WORK BEFORE PROCEEDING.
6. SUBSTITUTION OF EXPANSION ANCHORS FOR EMBEDDED ANCHORS SHOWN ON THE DRAWINGS WILL NOT BE PERMITTED.
7. NO PIPES, SLEEVES, OR ETC. SHALL PASS THROUGH BEAMS OR COLUMNS UNLESS INDICATED ON PLAN.

DESIGNER NOTES

1. FOUNDATION INFORMATION:
   A. MAXIMUM NET ALLOWABLE SOIL BEARING PRESSURE:
      (1) CONTINUOUS FOOTINGS: 3000 PSF
      (2) SPREAD FOOTINGS: 3000 PSF
2. STRUCTURE CLASSIFICATION PER ASCE 7-98:
   CATEGORY II
3. DESIGN ROOF LIVE LOAD (CONSTRUCTION AND MAINTENANCE): 20 PSF
4. WIND LOADS: WIND LOADS ARE COMPUTED IN ACCORDANCE WITH ASCE 7-98 USING THE FOLLOWING FACTORS:
   A. BASIC 50-YEAR WIND SPEED: 90 MPH
   B. SITE CLASS: CATEGORY II
   C. EXPOSURE FACTOR: EXPOSURE C SITING
   D. REFER TO WIND UPLIFT DIAGRAM ON SHEET S002
5. SEISMIC LOADS: SEISMIC LOADS ARE COMPUTED IN ACCORDANCE WITH TI 809-04
   A. SEISMIC USE GROUP: I
   B. PERFORMANCE OBJECTIVE: 1A. (LIFE SAFETY)
   C. SITE CLASSIFICATION: D
   D. DESIGN SPECTRAL RESPONSE ACCELERATIONS, Ss=0.59 & S1=0.19.
   E. SEISMIC DESIGN CATEGORY: D

STRUCTURAL STEEL

1. STRUCTURAL STEEL SHALL MEET THE LATEST AISC "SPECIFICATION FOR STRUCTURAL STEEL BUILDINGS."
2. STEEL FRAMING MEMBERS SHALL ONLY BE SPLICED AT LOCATIONS SHOWN ON THE DESIGN DRAWINGS OR SHOWN ON AND APPROVED ON THE SHOP DRAWINGS.
3. STRUCTURAL STEEL SHOP DRAWINGS SHALL BE PREPARED UNDER THE SUPERVISION OF A LICENSED PROFESSIONAL ENGINEER.
4. ALL STRUCTURAL STEEL SHALL MEET ASTM A572 GRADE 50 EXCEPT STRUCTURAL TUBING SHALL MEET ASTM A500, GRADE B, AND STRUCTURAL PIPING SHALL MEET ASTM A53, GRADE B.
5. ALL BEAM AND COLUMN CONNECTIONS SHALL BE MADE WITH A325 OR A490 BOLTS. CONNECTIONS SHALL BE DESIGNED AS BEARING (TYPE N) CONNECTIONS, UNLESS NOTED OTHERWISE. CONTRACTORS OPTION FOR BUILDING BRACE CONNECTIONS TO HAVE OVERSIZED HOLES AND BE SLIP CRITICAL. DESIGN CONNECTION AS FRICTION TYPE. PROVIDE LOAD INDICATOR BOLTS. DO NOT PAINT SURFACES OF STEEL IN CONTACT WITH EACH OTHER.
6. ALL ANCHOR BOLTS SHALL BE A307, OR A36 AND SHALL HAVE CUT THREADS.
7. ALL BOLTS SET IN CONCRETE SHALL BE FURNISHED WITH DOUBLE NUTS AND SHALL BE SET WITH A TEMPLATE.
8. PROVIDE ANGLE FRAME TO SUPPORT METAL DECK AT ALL OPENINGS GREATER THAN 9" x 9".
9. WELDING SHALL CONFORM TO AWS D1.1, "STRUCTURAL WELDING CODE". NO UNAUTHORIZED WELDS WILL BE ACCEPTED.
10. E70XX ELECTRODES SHALL BE USED FOR ALL WELDING.

COLD-FORMED STRUCTURAL METAL FRAMING

1. ALL COLD-FORMED STRUCTURAL METAL FRAMING SHALL HAVE A MINIMUM PROTECTIVE COATING EQUAL TO G-60 GALVANIZED FINISH. APPLY ZINC-RICH PAINT TO ALL AREAS WHERE FINISH IS DAMAGED DUE TO WELDING.
2. ALL STEEL FOR COLD-FORMED STRUCTURAL METAL FRAMING SHALL CONFORM TO ONE OF THE FOLLOWING ASTM STANDARDS: ASTM A653, A875, A792, OR A463.
3. ALL PRODUCTS SHALL BE FORMED FROM STEEL WITH A MINIMUM YIELD OF 33 ksi.
4. ALL STUD AND JOIST SECTIONS SHALL BE "C" TYPE SECTIONS WITH MINIMUM 1½" FLANGES AND A MINIMUM ½" RETURN UNLESS NOTED OTHERWISE.
5. ALL MEMBERS SHALL BE OF DEPTH AND GAGE AS INDICATED ON PLAN AND SECTIONS.
6. TRACK SECTIONS SHALL MEET OR EXCEED GAGE OF STUD MEMBERS, UNLESS OTHERWISE NOTED.
7. STRUCTURAL FRAMING MEMBERS SHALL CONFORM TO ASTM C955 AND HAVE ENGINEERING PROPERTIES CALCULATED IN ACCORDANCE WITH AISI "SPECIFICATION FOR THE DESIGN OF COLD-FORMED STEEL STRUCTURAL MEMBERS".
8. ALL FRAMING COMPONENTS SHALL BE CUT SQUARELY FOR ATTACHMENT TO PERPENDICULAR MEMBERS.
9. PROVIDE WEB STIFFENERS, CONNECTION ANGLES, AND MISCELLANEOUS HARDWARE REQUIRED TO COMPLETE ALL CONNECTIONS.
10. PROVIDE WALL STUD BRIDGING SPACED AT 48" MAXIMUM ON CENTERS IN EXTERIOR BEARING WALLS.
11. PROVIDE DEFLECTION TRACK AT THE TOP OF ALL NON-LOAD BEARING STUD WALLS WHERE THE TOP OF WALL ABUTS THE BOTTOM OF THE STRUCTURE.
12. FASTENING OF FRAMING COMPONENTS SHALL BE WITH SELF-TAPPING SCREWS OR WELDING OF SUFFICIENT SIZE TO INSURE THE STRENGTH OF THE CONNECTION. WELDS SHALL BE PERFORMED BY OPERATORS QUALIFIED IN ACCORDANCE WITH SECTION 6.0 OF THE AMERICAN WELDING SOCIETY'S "STRUCTURAL WELDING CODE - SHEET METAL" (AWS D1.3-8).
13. ATTACH STUDS TO TRACK WITH A MINIMUM OF ONE SCREW PER STUD FLANGE, UNLESS OTHERWISE NOTED, E.G. DEFLECTION TRACKS.
14. ANCHOR BASE TRACK TO FLOOR/FOUNDATION TO RESIST A MINIMUM OF 360 PLF LATERAL SHEAR FORCE.
15. ROOF TRUSSES SHALL BE ENGINEERED BY COLD FORMED SUPPLIER'S ENGINEER.
16. LOADS TO TRUSSES SHOWN IN DESIGN CRITERIA AND OTHERWISE SHOWN ON DRAWINGS SHALL BE TRANSFERRED TO THE STRUCTURAL STEEL.
17. THE TOP CHORD OF THE ROOF TRUSSES SHALL BE 16 GA. MINIMUM METAL THICKNESS.

CONSTRUCTION

1. CONTRACTOR SHALL DESIGN, PROVIDE, AND MAINTAIN TEMPORARY BRACING, SHORING, GUYING, ETC. AND OTHER METHODS AS REQUIRED TO PREVENT EXCESSIVE LOADING AND TO STABILIZE STRUCTURAL ELEMENTS DURING CONSTRUCTION. THESE METHODS SHALL REMAIN IN PLACE UNTIL ALL MEMBERS AND FINAL CONNECTIONS HAVE BEEN COMPLETED.

CAST-IN-PLACE CONCRETE

1. ALL CONCRETE SHALL HAVE MINIMUM COMPRESSIVE STRENGTHS AT 28 DAYS AS FOLLOWS:
   ELEVATED FLOOR SLABS 4000 PSI
   ALL OTHER 3000 PSI
2. CONCRETE FOR ELEVATED SLABS SHALL CONTAIN LIGHTWEIGHT AGGREGATE TO ACHIEVE A DENSITY OF 115 PCF.
3. ALL AGGREGATE FOR NORMAL WEIGHT CONCRETE SHALL MEET ASTM C33.
4. ALL AGGREGATE FOR STRUCTURAL LIGHTWEIGHT CONCRETE SHALL BE ASTM C330.
5. EXTERIOR EXPOSED CONCRETE SHALL HAVE FROM 4 TO 7% ENTRAINED AIR.
6. CONCRETE SHALL BE IN STRICT CONFORMANCE WITH THE CURRENT "ACI MANUAL OF CONCRETE PRACTICE".
7. NO ALUMINUM SHALL BE PLACED IN CONCRETE.
8. SLABS ON EARTH SHALL BE 6" THICK @ CEP WITH 6x6-W2.0xW2.0 WELDED WIRE FABRIC UNLESS OTHERWISE NOTED.
9. CONTRACTION JOINTS OR CONSTRUCTION JOINTS IN SLABS ON GRADE SHALL BE SPACED TO DIVIDE THE SLAB INTO PANELS NOT TO EXCEED 250 SQUARE FEET UNLESS NOTED OTHERWISE, THE LONGER DIMENSION OF EACH PANEL SHALL NOT EXCEED THE SHORTER DIMENSION BY MORE THAN 20 PERCENT.
10. PROVIDE CONCRETE BASES FOR MECHANICAL EQUIPMENT. ALL SHALL BE 4" THICK ON TOP OF FLOOR SLABS ON GRADE WITH WELDED WIRE FABRIC, UNLESS OTHERWISE NOTED.
11. NO ELECTRICAL CONDUIT SHALL BE CAST IN A STRUCTURAL CONCRETE SYSTEM WITHOUT ARCHITECT/ENGINEER APPROVAL.

REINFORCING STEEL

1. ALL MESH SHALL MEET ASTM A-185. LAP A MINIMUM OF 12 INCHES.
2. FURNISH MESH FOR SLABS ON METAL DECK IN FLAT SHEETS.
3. ALL REINFORCING SHALL MEET ASTM A615 GRADE 60.
4. UNLESS NOTED OTHERWISE, THE LAP AND EMBEDMENT LENGTHS SHALL BE IN ACCORDANCE WITH THE LENGTHS SHOWN IN THE TABLE.
5. REINFORCING SHALL BE DETAILED ACCORDING TO THE ACI DETAILING MANUAL UNDER THE SUPERVISION OF A LICENSED STRUCTURAL ENGINEER.
6. PROVIDE CORNER LAP BARS TO MATCH IN SIZE AND SPACING OF ALL HORIZONTAL BARS.

PRE-ENGINEERED BUILDING:

1. THE DESIGN SHALL BE THE RESPONSIBILITY OF THE PRE-ENGINEERED BUILDING MANUFACTURER AND SHALL BE PREPARED UNDER THE DIRECT SUPERVISION OF A PROFESSIONAL ENGINEER REGISTERED IN THE STATE OF SOUTH CAROLINA.
2. DESIGN CRITERIA
   A. PRIMARY AND SECONDARY STRUCTURAL MEMBERS AND EXTERIOR COVERING MATERIALS: METAL BUILDING MANUFACTURER'S ASSOCIATION'S (MBMA) "DESIGN PRACTICES MANUAL".
   B. STRUCTURAL STEEL MEMBERS: AMERICAN INSTITUTE OF STEEL CONSTRUCTION'S (AISC) "SPECIFICATIONS FOR THE DESIGN, FABRICATION AND ERECTION OF STRUCTURAL STEEL FOR BUILDINGS".
   C. LIGHT GAGE STEEL MEMBERS: AMERICAN IRON AND STEEL INSTITUTE'S (AISI) "SPECIFICATION FOR THE DESIGN OF COLD FORMED STEEL STRUCTURAL MEMBERS" AND "DESIGN OF LIGHT GAGE STEEL DIAPHRAGMS".
   D. FOR WELDED CONNECTIONS: AMERICAN WELDING SOCIETY'S (AWS) "STANDARD CODE FOR ARC AND GAS WELDING IN BUILDING CONSTRUCTION".
3. DESIGN LOADS: BASIC DESIGN LOADS, AS WELL AS AUXILIARY AND COLLATERAL LOADS, ARE INDICATED BELOW.
   A. GRAVITY LIVE LOADS, WIND AND SEISMIC LOADS AS INDICATED IN "DESIGN CRITERIA" SECTION OF THESE NOTES.
   B. BASIC DESIGN LOADS INCLUDE, IN ADDITION TO DEAD LOAD, LIVE LOAD, WIND LOAD, SEISMIC LOAD, CRANE LOAD WHERE INDICATED ON THE DRAWINGS.
   C. AUXILIARY LOADS INCLUDE DYNAMIC LIVE LOADS SUCH AS THOSE GENERATED BY CRANES AND MATERIALS HANDLING EQUIPMENT.
   D. COLLATERAL LOADS INCLUDE ADDITIONAL DEAD LOADS OVER AND ABOVE THE WEIGHT OF THE METAL BUILDING SYSTEM SUCH AS MECHANICAL SYSTEMS AND LIGHTING LOADS.
   E. DESIGN EACH MEMBER TO WITHSTAND STRESSES RESULTING FROM COMBINATIONS OF LOADS THAT PRODUCE ALLOWABLE STRESSES IN THAT MEMBER, AS PRESCRIBED IN MBMA'S "DESIGN PRACTICES MANUAL".
4. SUBMIT COMPLETE DESIGN CALCULATIONS AND ERECTION DRAWINGS SHOWING ANCHOR BOLT SETTINGS, SIDEWALL, ENDWALL, AND ROOF FRAMING, TRANSVERSE CROSS SECTIONS, COVERING AND TRIM DETAILS, AND ACCESSORY INSTALLATION DETAILS TO CLEARLY INDICATE PROPER ASSEMBLY OF BUILDING COMPONENTS.
5. DESIGN CALCULATIONS AND ERECTION DRAWINGS SHALL BE SEALED AND SIGNED BY A PROFESSIONAL ENGINEER REGISTERED IN THE STATE OF SOUTH CAROLINA.
6. FRAMES SHALL BE DESIGNED ON THE BASIS OF ELASTIC BEHAVIOR.
7. STRUCTURAL PLATE OR BAR STOCK SHALL HAVE A MINIMUM YIELD OF 50 ksi.
8. COLD-FORMED STRUCTURAL STEEL SHALL HAVE A MINIMUM YIELD STRENGTH OF 55 ksi.

TYPICAL CONCRETE COVER FOR REINFORCING STEEL

UNLESS NOTED OTHERWISE, THE FOLLOWING MINIMUM CONCRETE COVER SHALL BE PROVIDED FOR REINFORCING STEEL IN ACCORDANCE WITH ACI 318.

PLACEMENT/ EXPOSURE CONDITION	MINIMUM COVER
(a) CONCRETE CAST AGAINST AND PERMANENTLY EXPOSED TO EARTH....	3"
(b) CONCRETE EXPOSED TO EARTH OR WEATHER: #6 BARS AND LARGER....	2"
#5 BARS AND SMALLER....	1½"
(c) CONCRETE NOT EXPOSED TO WEATHER OR IN CONTACT WITH GROUND: (i) SLABS AND WALLS: #11 BARS AND SMALLER...	¾"
(ii) BEAMS AND COLUMNS: PRIMARY REINFORCEMENT, TIES, AND STIRRUPS...	1½"

DESIGN CRITERIA

1. SUPERIMPOSED ROOF LIVE LOAD = 20 psf
2. COLLATERAL (MECHANICAL, ELECTRICTAL, etc) ROOF LOADS TO BE COORDINATED THROUGH DESIGN/BUILD CONTRACTOR.
3. LIVE LOAD FOR OFFICE CAP SLABS = 25 psf.
4. LATERAL DRIFT LIMIT AT EAVE SHALL BE H/240.

MINIMUM LAP SPLICES OF REINFORCING BARS IN TENSION (PER ACI 318-89)

	f'c = 4000psi					f'c = 3000psi				
BAR SIZE / CENTER TO CENTER BAR SPACING	(--TOP BARS--) LESS THAN 4db	(--TOP BARS--) 4db OR MORE	(--OTHER BARS--) LESS THAN 4db	(--OTHER BARS--) 4db OR MORE	(--OTHER BARS--) 4db	BAR SIZE / CENTER TO CENTER BAR SPACING	(--TOP BARS--) LESS THAN 4db	(--TOP BARS--) 4db OR MORE	(--OTHER BARS--) LESS THAN 4db	(--OTHER BARS--) 4db OR MORE	(--OTHER BARS--) 4db
#3	18	18	16	16	1 1/2 "	#3	21	21	16	16	1 1/2 "
#4	26	24	20	19	2"	#4	30	28	23	22	2"
#5	40	30	31	23	2 1/2 "	#5	46	35	36	27	2 1/2 "
#6	57	36	44	28	3"	#6	65	42	50	32	3"
#7	77	42	59	33	3 1/2 "	#7	89	50	69	39	3 1/2 "
#8	102	51	78	39	4"	#8	117	66	90	51	4"
#9	129	64	99	50	4 1/2 "	#9	148	83	114	64	4 1/2 "
#10	163	82	126	63	5"	#10	188	106	145	81	5"
#11	200	100	159	77	5 5/8 "	#11	231	130	178	100	5 5/8 "

NOTES:
1. YIELD STRENGTH OF REINFORCEMENT, fy, IS 60 ksi (LAP SPLICE LENGTH IS IN INCHES).
2. CONCRETE IS NORMAL WEIGHT (150 pcf).
3. TOP BAR INDICATES HORIZONTAL REINFORCEMENT WHICH IS PLACED ABOVE 12" OR MORE OF FRESH CONCRETE.
4. UNLESS NOTED OTHERWISE COLUMNS & PIERS UTILIZE TENSION LAP SPLICES.
5. STRAIGHT DEVELOPMENT LENGTH OF AN UNLAPPED BAR IS EQUAL TO VALUE FROM TABLE DIVIDED BY 1.3.
6. CATEGORY FOR BARS SPACED LESS THAN 4d, ON CENTER CORRESPONDS TO CATEGORY 1 IN THE CRSI HANDBOOK WHEREAS FOR BARS SPACED 4d, OR MORE ON CENTER CORRESPOND TO CRSI CATEGORY 5.

US ARMY CORPS OF ENGINEERS
SAVANNAH DISTRICT

DESIGNED BY | CHECKED BY | SIZE F
CATEGORY CODE 721-81-06
CONTRACT NO: DACA21-02-C-0046
DATE: 23 APRIL 2003
PLOT SCALE: 1

CLARK CONSTRUCTION
CLARK DESIGN/BUILD, LLC

SYMBOL	DESCRIPTION	DATE	BY

DESIGN FILE: $$FILE NAME$$
$$DATE$$

BASIC COMBAT TRAINEE BARRACKS COMPLEX I
FORT JACKSON, SOUTH CAROLINA
CENTRAL ENERGY PLANT

STRUCTURAL GENERAL NOTES

PLATE REFERENCE NUMBER:
S-001
SHEET 18

CONFORMED DRAWINGS 11/21/03

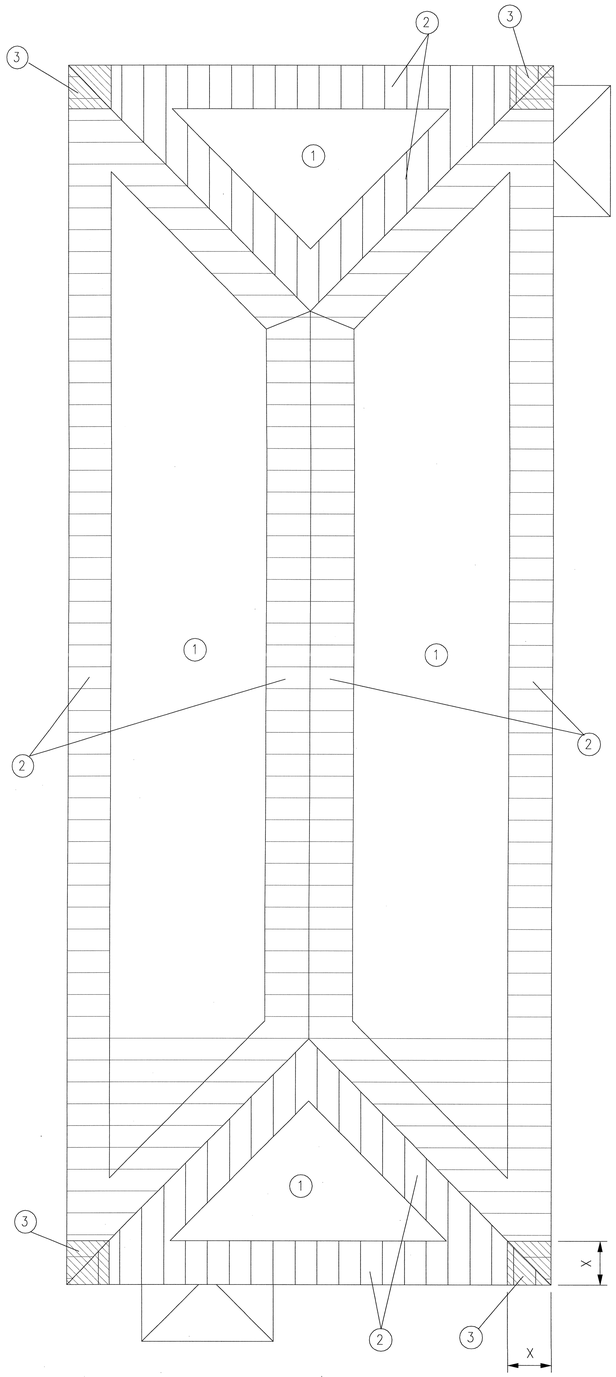

CENTRAL ENERGY PLANT
ROOF UPLIFT DIAGRAM

ROOF MEAN HEIGHT = 28.5'				
LOCATION	UPLIFT PRESSURE (psf)			X
	①	②	③	
BLDG ROOF	-22	-46.3	-46.3	7 ft

1.0 WIND LOAD (PER ASCE 7-98)

1.0.1 BASIC WIND SPEED = 90 mph
EXPOSURE C; IMPORTANCE FACTOR I = 1.0

1.0.2 DESIGN WIND PRESSURE - MAIN WINDFORCE RESISTING SYSTEM

LOCATION	WINDWARD (@ MEAN ROOF HEIGHT)	LEEWARD (@ MEAN ROOF HEIGHT)	ROOF	
MAIN BUILDING	14.5 psf	-5.2 psf	-18 psf	(UPLIFT)
MAIN BUILDING @ CORNERS	20.0 psf	-10.4 psf	-25.5 psf	(UPLIFT)

1.0.3 DESIGN WIND PRESSURE - WALL COMPONENTS & CLADDING

EXTERIOR WALL SYSTEMS & THEIR ATTACHMENTS TO THE PRIMARY STRUCTURE SHALL BE DESIGNED FOR THE PRESSURES SHOWN IN THE DIAGRAM BELOW:

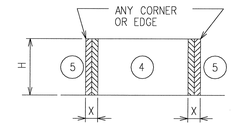

PRESSURE ON EXTERIOR WALL SYSTEMS FOR BUILDINGS WITH MEAN ROOF HEIGHT (H) = 0 TO 30 FT

LOCATION	H	WINDWARD PRESSURE psf (INWARD)		LEEWARD PRESSURE psf (OUTWARD)		X
		④	⑤	④	⑤	
MAIN BLDG	9	24	24	-26	-32	7 ft

1.0.4 DESIGN WIND PRESSURE - ROOF UPLIFT

JOIST, ROOF DECK & FASTENERS SHALL BE DESIGNED FOR THE WIND PRESSURES SHOWN ON THIS DRAWING

2.0 SEISMIC LOAD (PER TI 809-04, DATED 31 DECEMBER 1998)

2.0.1 SEISMIC USE GROUP: I
2.0.2 SPECTRAL RESPONSE COEFFICIENTS: S_S = 0.59, S_1 = 0.19
2.0.3 SITE CLASS: D
2.0.4 BASIC SEISMIC FORCE RESISTING SYSTEM: MOMENT RESISTING FRAME SYSTEM, ORDINARY STEEL MOMENT FRAMES
2.0.5 SEISMIC RESPONSE COEFFICIENT: Cs = 0.131
2.0.6 DESIGN BASE SHEAR: 111 kips
2.0.7 ANALYSIS PROCEDURE: EQUIVALENT LATERAL FORCE PROCEDURE
2.0.8 SEISMIC DESIGN CATEGORY: D

US ARMY CORPS
OF ENGINEERS
SAVANNAH DISTRICT

DESIGNED BY | CHECKED BY | SIZE F
CATEGORY CODE 721-81-06
CONTRACT NO: DACA21-02-C-0046
DATE: 23 APRIL 2003
PLOT SCALE:

CLARK DESIGN/BUILD, LLC

DESIGN FILE: $$FILE NAME$$
$$DATE$$

SYMBOL	DESCRIPTION	DATE	BY

BASIC COMBAT TRAINEE BARRACKS COMPLEX I
FORT JACKSON, SOUTH CAROLINA
CENTRAL ENERGY PLANT

STRUCTURAL
GENERAL NOTES

PLATE REFERENCE NUMBER:
S-002
SHEET 19

CONFORMED DRAWINGS 11/21/03

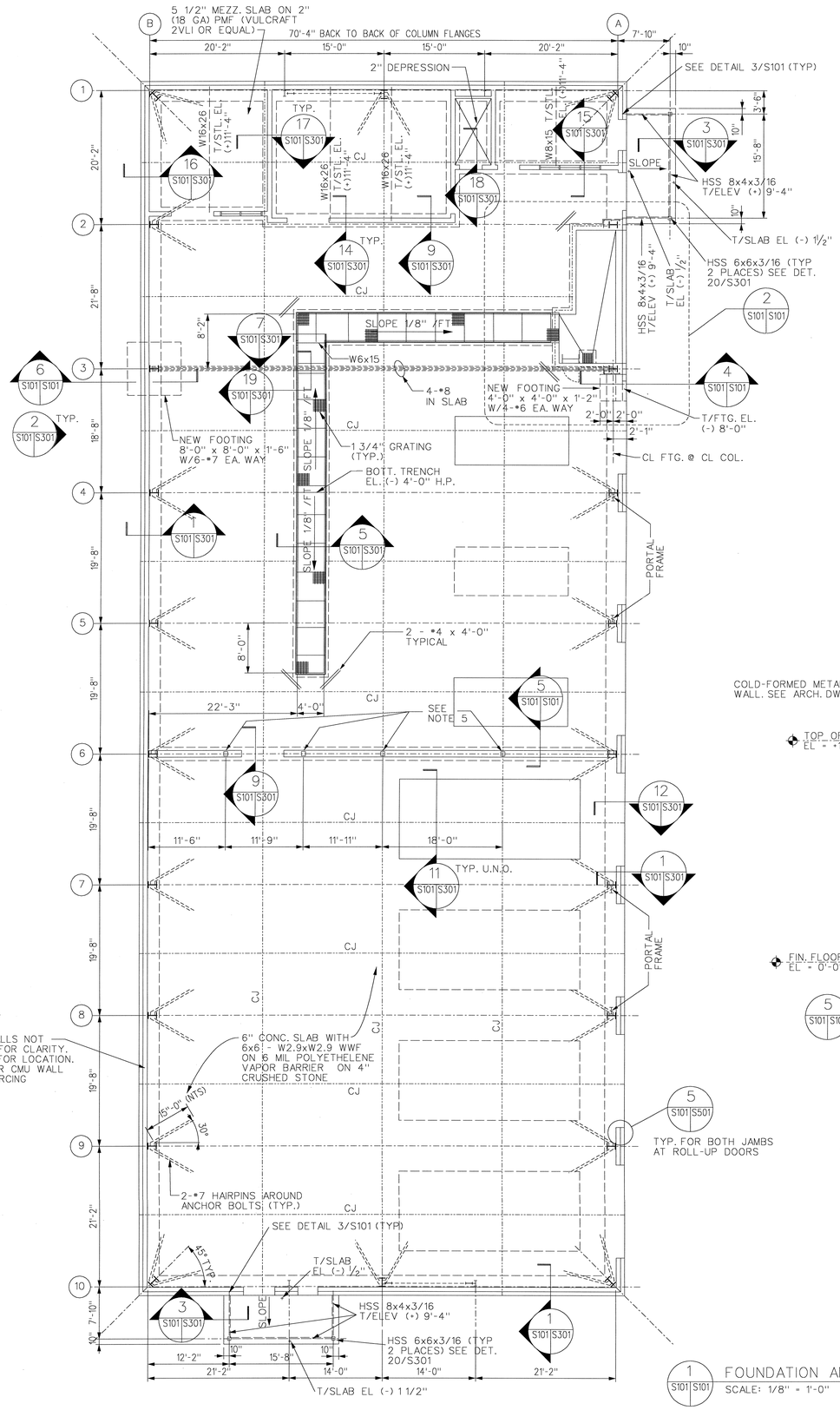

1 S101 S101 FOUNDATION AND SLAB PLAN
SCALE: 1/8" = 1'-0"

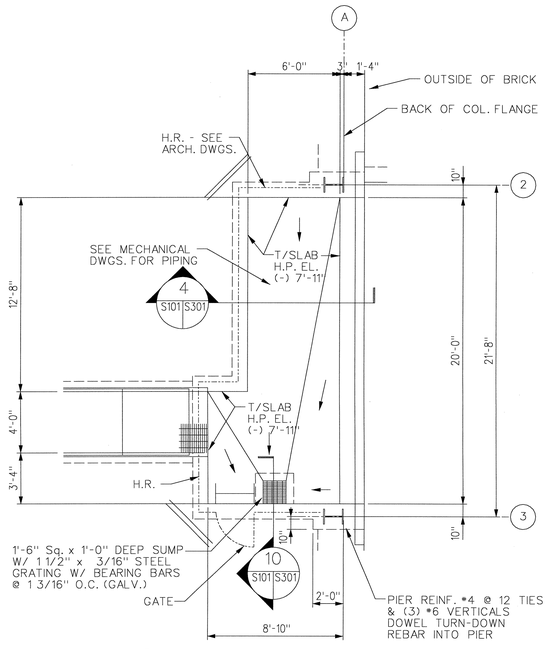

2 S101 S101 ENLARGED MECHANICAL PIT PLAN
SCALE: 1/4" = 1'-0"

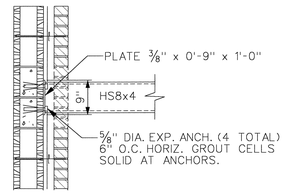

3 S101 S101 DETAIL
SCALE: 3/4" = 1'-0"

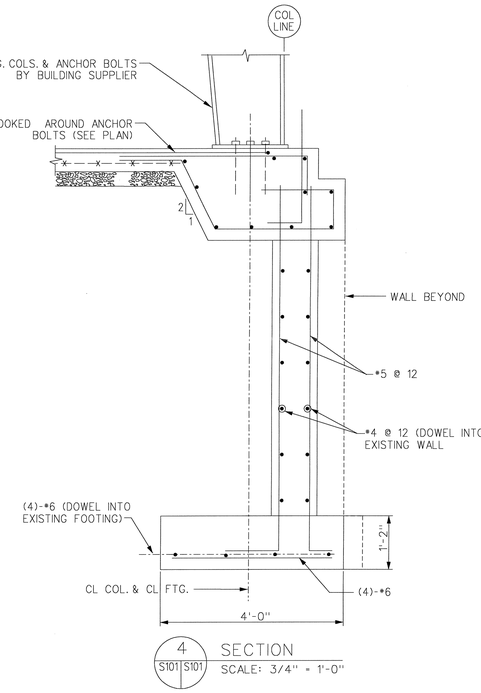

4 S101 S101 SECTION
SCALE: 3/4" = 1'-0"

5 S101 S101 SECTION
SCALE: 1/4" = 1'-0"

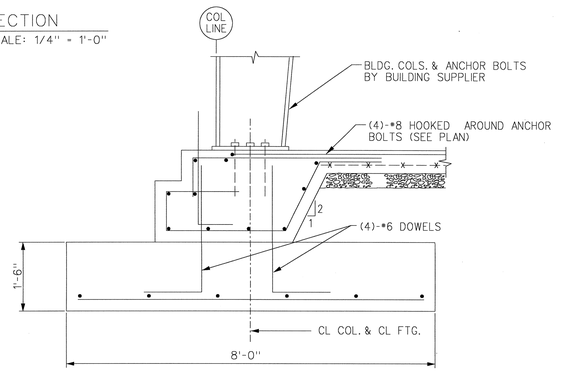

6 S101 S101 SECTION
SCALE: 3/4" = 1'-0"

NOTES:

1. SEE CIVIL DRAWINGS FOR BUILDING LOCATION AND ORIENTATION
2. FOUNDATIONS FOR BUILDING COLUMNS ARE DESIGNED FOR 35 kips VERTICAL AND 15 kips HORIZONTAL GRAVITY LOADS AND 6.5 kips VERTICAL UPLIFT. CONTRACTOR SHALL VERIFY COLUMN LOADS WITH BUILDING SUPPLIER. NOTIFY ENGINEER IF BUILDING LOADS EXCEED FOUNDATION DESIGN LOADS.
3. SEE DRAWING S301 FOR TYPICAL DETAILS.
4. SEE DRAWING S001 FOR GENERAL NOTES & DESIGN CRITERIA.
5. PROVIDE (4) HSS 8x8x1/4 POSTS WITHIN 12" CMU WALL WHERE SHOWN. BASE PLATE SHALL BE ½" x 11½" x 11½" W/ (4) ½" DIA. ANCHOR BOLTS. TOP SHALL BE CLIPPED TO ROOF GIRDER TO ALLOW FOR 1½" OF VERTICAL MOVEMENT.
6. COORDINATE TRENCH/PIT SIZE AND LOCATION WITH MECHANICAL DRAWINGS.
7. CJ DENOTES SLAB CONSTRUCTION OR CONTROL JOINT. SEE TYPICAL DETAILS 2/S301 & 13/S301.
8. COLUMN FOOTINGS SHALL NOT BEAR DIRECTLY ON EXPANSIVE KAOLIN CLAY. IF CLAY IS FOUND IN FOOTING EXCAVATION, OVEREXCAVATE TO A LEVEL 30" BELOW FINISHED GRADE. BACKFILL WITH APPROVED MATERIAL COMPACTED AT 95% STANDARD PROCTOR. ALL FOUNDATIONS SHALL BE INSPECTED BY THE PROJECT GEOTECHNICAL ENGINEER.

8 6 4 2 0 8 16FT
SCALE: 1/8"=1'-0"

4 3 2 1 0 4 8FT
SCALE: 1/4"=1'-0"

US ARMY CORPS OF ENGINEERS
SAVANNAH DISTRICT

DESIGNED BY	CHECKED BY	SIZE F
CATEGORY CODE 721-81-06		
CONTRACT NO: DACA21-02-C-0046		
DATE: 23 APRIL 2003	PLOT SCALE:	:

CLARK CONSTRUCTION
CLARK DESIGN/BUILD, LLC

DESIGN FILE: $$FILE NAME$$
$$DATE$$

SYMBOL	DESCRIPTION	DATE	BY

BASIC COMBAT TRAINEE BARRACKS COMPLEX I
FORT JACKSON, SOUTH CAROLINA
CENTRAL ENERGY PLANT

FOUNDATION AND SLAB PLAN

PLATE REFERENCE NUMBER: S-101
SHEET 20

CONFORMED DRAWINGS 11/21/03

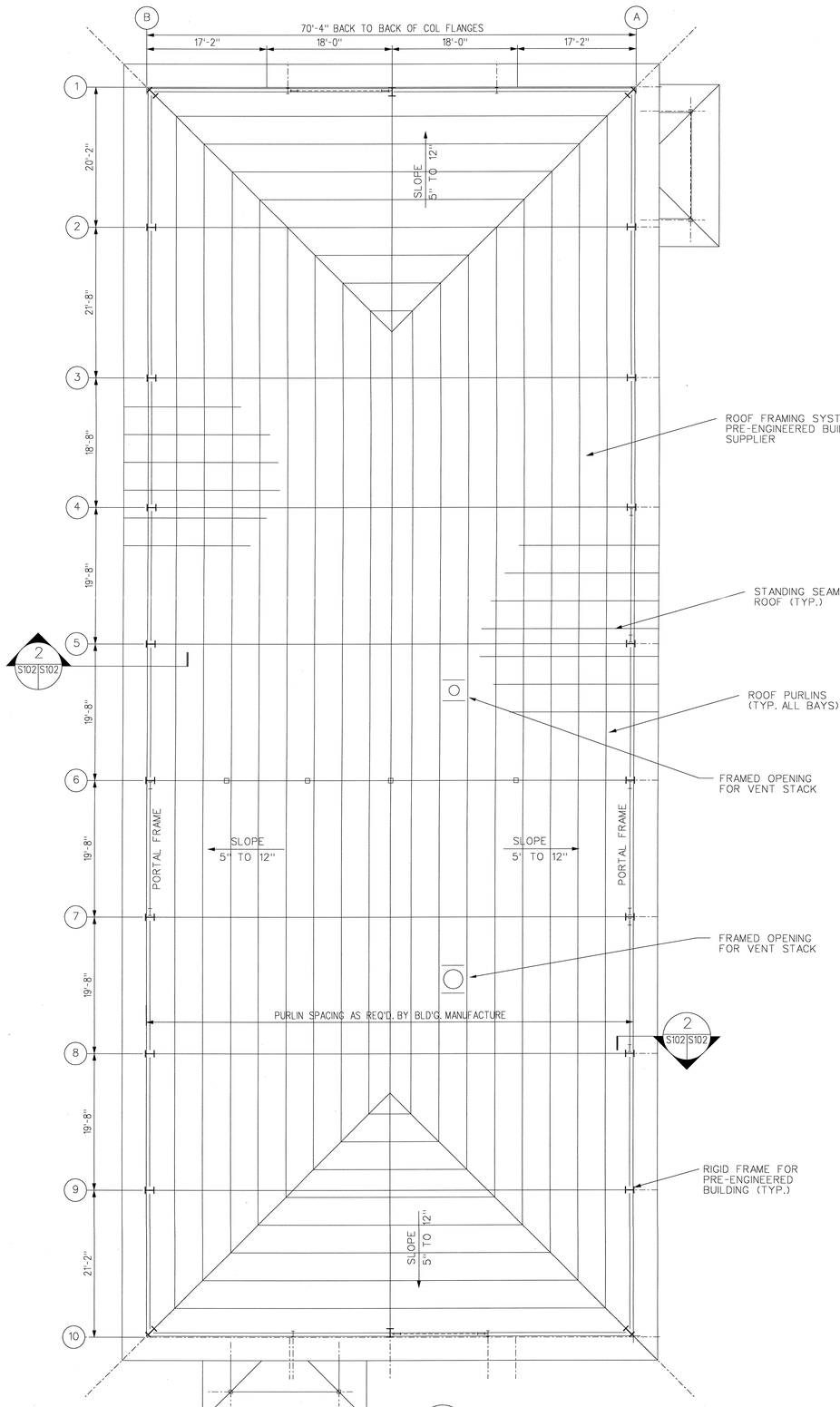

1 S102 S102 ROOF FRAMING PLAN
SCALE : 1/8" = 1'-0"

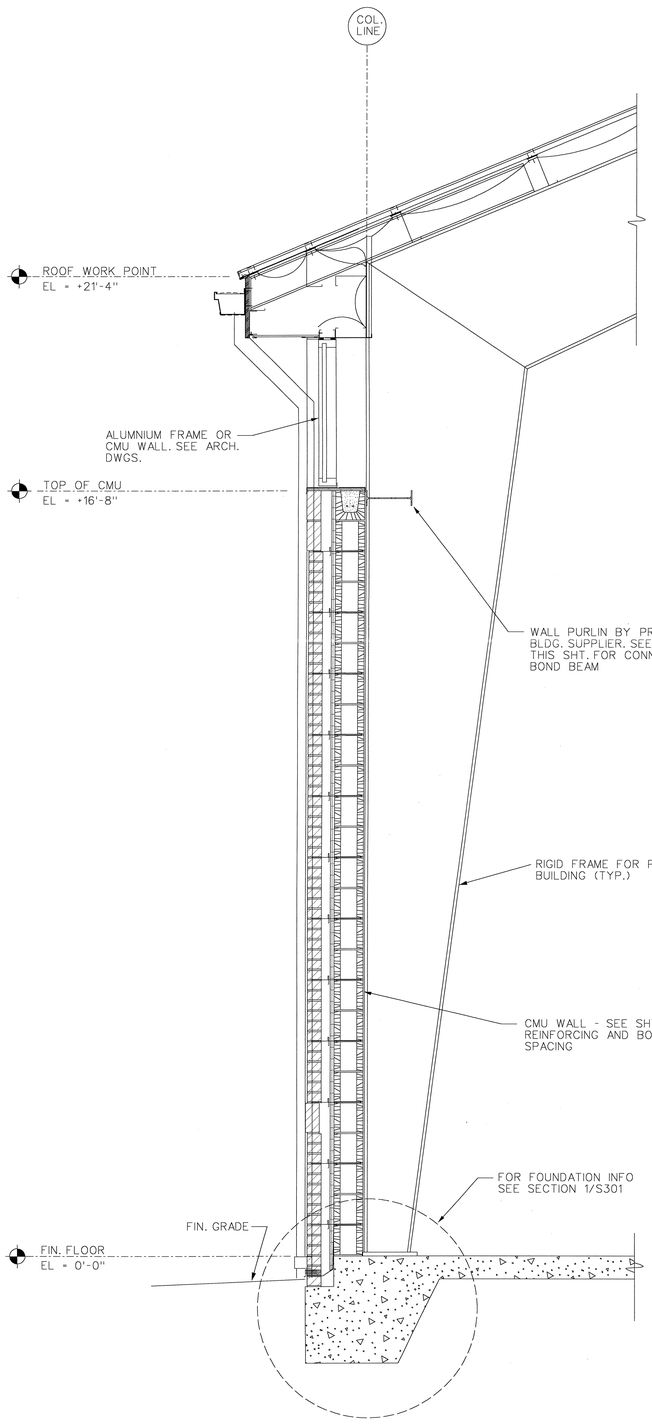

2 S102 S102 SECTION
SCALE: 3/4" = 1'-0"

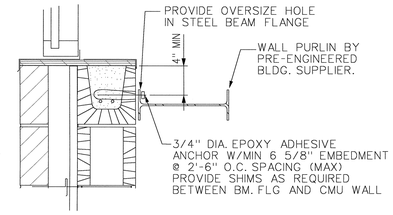

3 S102 S102 DETAIL
SCALE: 1 1/2" = 1'-0"

8 6 4 2 0 8 16FT
SCALE: 1/8"=1'-0"
1 0 1 2FT
SCALE: 3/4"=1'-0"
1 0 1FT
SCALE: 1 1/2"=1'-0"

US ARMY CORPS OF ENGINEERS SAVANNAH DISTRICT

DESIGNED BY	CHECKED BY	SIZE F
CATEGORY CODE 721-81-06	CONTRACT NO: DACA21-02-C-0046	DATE: 23 APRIL 2003
		PLOT SCALE:

CLARK CONSTRUCTION
CLARK DESIGN/BUILD, LLC

DESIGN FILE: $$FILE NAME$$
$$DATE$$

SYMBOL	DESCRIPTION	DATE	BY

BASIC COMBAT TRAINEE BARRACKS COMPLEX I
FORT JACKSON, SOUTH CAROLINA
CENTRAL ENERGY PLANT

ROOF FRAMING PLAN

PLATE REFERENCE NUMBER: S-102
SHEET 21

CONFORMED DRAWINGS 11/21/03

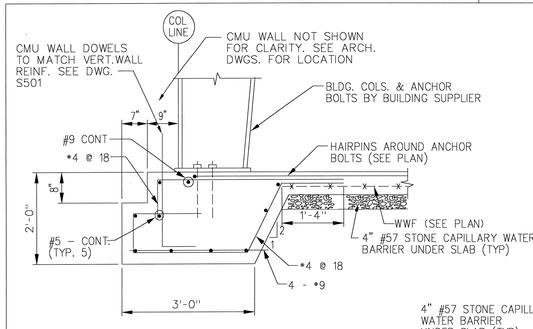

1 SECTION S101|S301 SCALE: 3/4" = 1'-0"

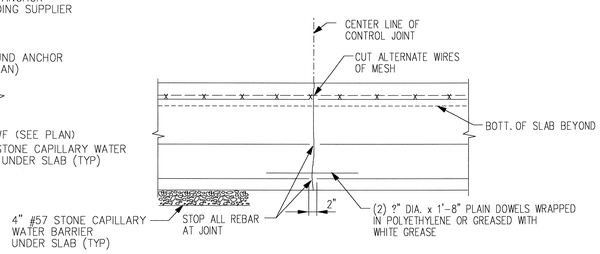

2 TYPICAL CONTROL JOINT AT SLAB TURNDOWN S101|S301 SCALE: 3/4" = 1'-0"

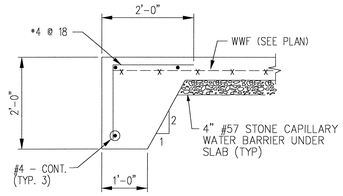

3 SECTION S101|S301 SCALE: 3/4" = 1'-0"

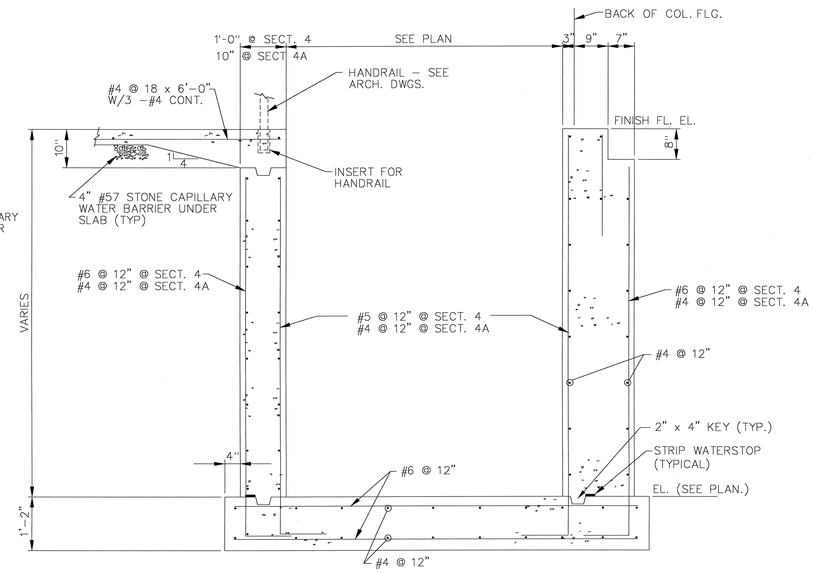

4 4A SECTION S101|S301 S101|S301 SCALE: 3/4" = 1'-0"

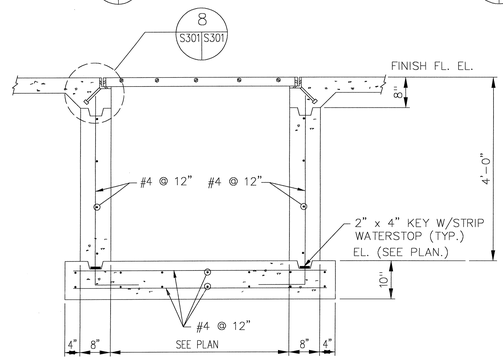

5 SECTION S101|S301 SCALE: 3/4" = 1'-0"

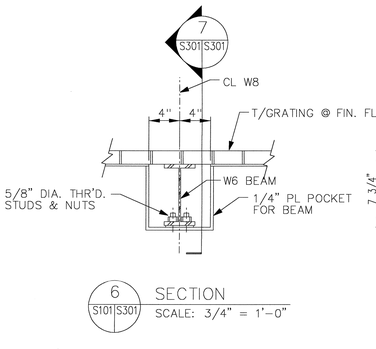

6 SECTION S101|S301 SCALE: 3/4" = 1'-0"

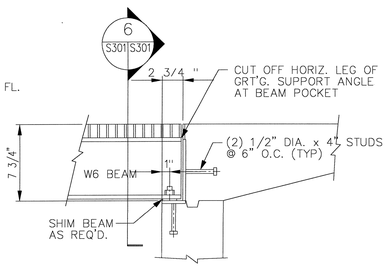

7 SECTION S101|S301 SCALE: 3/4" = 1'-0"

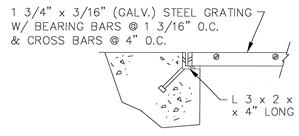

8 DETAIL S101|S301 SCALE: 1 1/2 " = 1'-0"

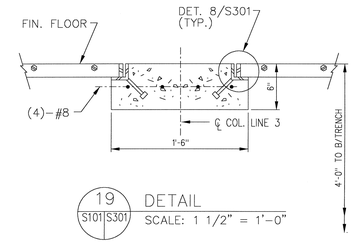

19 DETAIL S101|S301 SCALE: 1 1/2" = 1'-0"

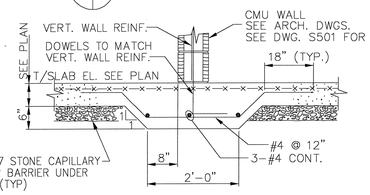

9 SECTION S101|S301 SCALE: 3/4" = 1'-0"

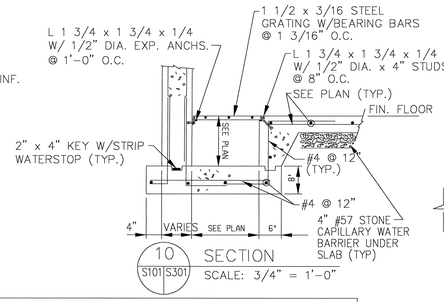

10 SECTION S101|S301 SCALE: 3/4" = 1'-0"

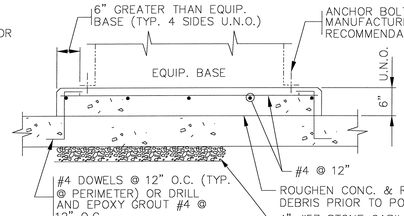

NOTE: THIS SECTION SHALL BE USED FOR EQUIPMENT WITH NO SIGNIFICANT DYNAMIC LOADING. CONTRACTOR SHALL NOTIFY ENGINEER CONCERNING EQUIPMENT THAT MAY IMPART DYNAMIC LOADING TO THE FOUNDATION AND OBTAIN APPROVAL PRIOR TO FABRICATION OR CONSTRUCTION.

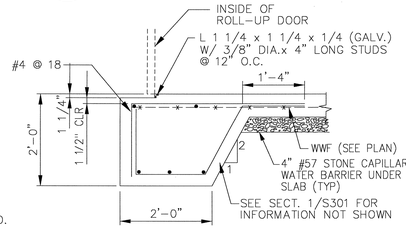

12 SECTION S101|S301 SCALE: 3/4" = 1'-0"

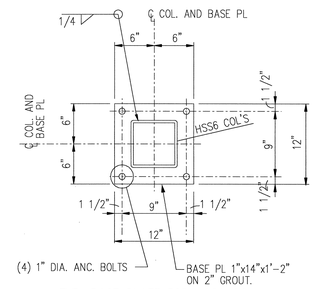

TYP. BASE PLATE FOR HSS6 COLUMNS

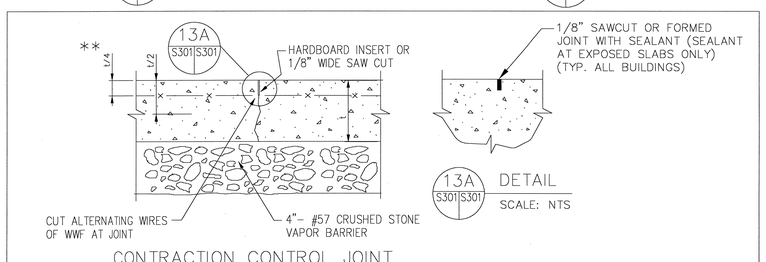

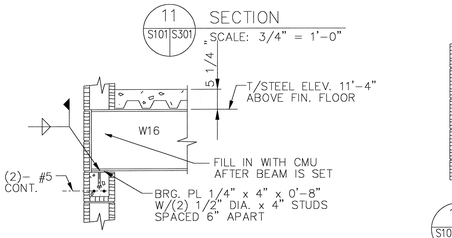

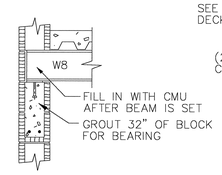

15 SECTION S101|S301 SCALE: 3/4" = 1'-0"

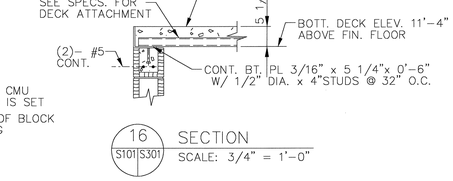

16 SECTION S101|S301 SCALE: 3/4" = 1'-0"

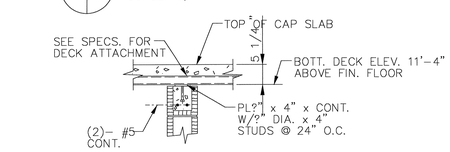

14 SECTION S101|S301 SCALE: 3/4" = 1'-0"

17 SECTION S101|S301 SCALE: 3/4" = 1'-0"

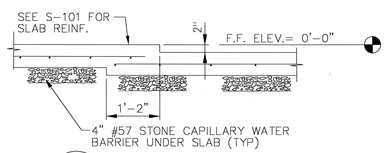

18 SECTION S101|S301 SCALE: 3/4" = 1'-0"

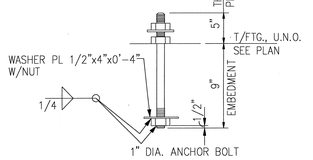

NOTE: BASE PLATES SIT ON 2" GROUT, U.N.O.

TYP. ANCHOR BOLT DETAIL

20 DETAIL S101|S301 SCALE: NONE

21 DETAIL S301|S301 SCALE: NONE

SCALE: 3"=1'-0"

SCALE: 1 ?"=1'-0"

US ARMY CORPS OF ENGINEERS SAVANNAH DISTRICT

DESIGNED BY	CHECKED BY	SIZE F
CATEGORY CODE 721-81-06		
CONTRACT NO: DACA21-02-C-0046		
DATE: 23 APRIL 2003		
PLOT SCALE:		

CLARK CONSTRUCTION

CLARK DESIGN/BUILD, LLC

DATE	BY	DESCRIPTION	SYMBOL

DESIGN FILE: $$FILE NAME$$
$$DATE$$

BASIC COMBAT TRAINEE BARRACKS COMPLEX I
FORT JACKSON, SOUTH CAROLINA
CENTRAL ENERGY PLANT

SECTIONS AND DETAILS

PLATE REFERENCE NUMBER: S-301

SHEET 22

CONFORMED DRAWINGS 11/21/03

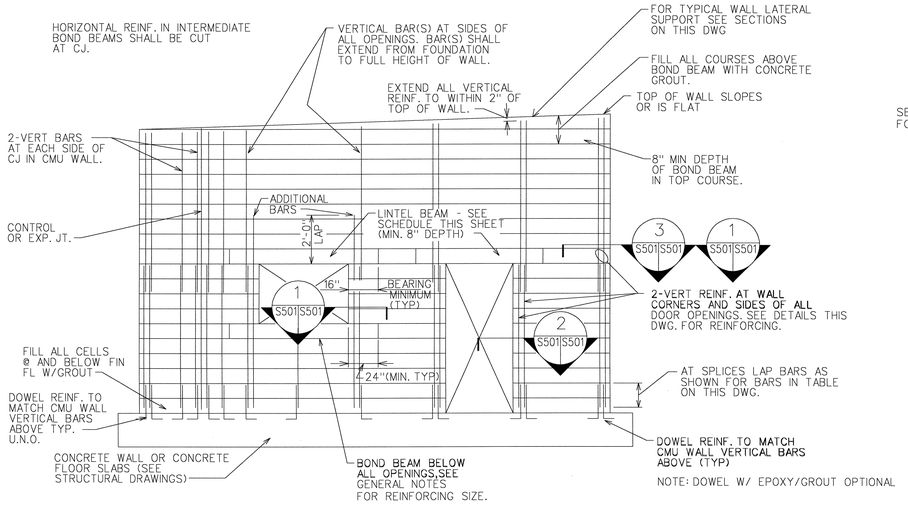

NOTE: DOWEL W/ EPOXY/GROUT OPTIONAL

TYPICAL ELEVATION AT CMU WALL (EXTERIOR / INTERIOR)

SCALE: NONE

NOTE: SEE ARCH PLAN DWGS FOR CMU WALLS.
WALL REINFORCING SHOWN ABOVE IS MIN. REQUIRED IN WALLS.
ADDITIONAL WALL REINFORCING SIZES AND SPACING ARE GIVEN IN CMU WALL REINF. SCHEDULE, SECTIONS AND DETAILS.

MAXIMUM CMU WALL UNSUPPORTED HEIGHT OR LENGTH			
	WALL THICKNESS	EXTERIOR WALL NON-LOAD BEARING	INTERIOR NON-LOAD BEARING WALL
MAX HEIGHT OR LENGTH BETWEEN SUPPORTS	8"	16'-8"	24'-0"
	12"	SEE SECTION 5/S101	

NOTE: CMU WALL MAXIMUM LATERAL SUPPORT SPACING GIVEN IN SECTIONS AND DETAILS SHALL SUPERCEDE THE ABOVE SCHEDULE REQUIREMENTS.

BRICK/BLOCK LINTEL SCHEDULE		
SPAN	4" BRICK/BLOCK	8" BLOCK & 12" BLOCK
SPANS UP TO 5'-0"	1 - L6 x 6 x 5/16	SEE CMU LINTEL SCHEDULE
5'-0" TO 7'-0"	1 - L6 x 6 x 5/16	SEE CMU LINTEL SCHEDULE
7'-0" TO 8'-0"	1 - L6 x 6 x 5/16	SEE CMU LINTEL SCHEDULE
8'-0" TO 9'-0"	1 - L6 x 6 x 5/16	SEE CMU LINTEL SCHEDULE
9'-0" TO 14'-0"	SEE DETAIL 12/S501	

NOTE: MINIMUM BEARING 6" UNLESS NOTED

TYPICAL MIN. CMU WALL REINFORCING					
WALL THICKNESS	VERT BARS MIN SIZE MAX SPACING	BOND BEAM		REMARKS	COMMENTS
		BAR SIZE	MAX.SPACING		
8" OR 12"	1-#4@48" (UNO)	2-#5'S	4'-0"		ALL WALLS UNLESS NOTED OTHERWISE
8"	1-#5@32" (UNO)	2-#5'S	4'-0'		EXTERIOR WALLS
8"	1-#5@24" (UNO)	2-#5'S	4'-0'		EXTERIOR WALLS FOR 1st 8' FROM CORNER
8" OR 12"	1-#5@48"	2-#5'S	4'-0"		CEP INTERIOR WALLS

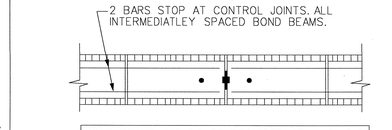

NOTE: SEE ARCH DWGS FOR CONTROL JOINT LOCATIONS

BOND BEAMS AT CONTROL JOINTS

11 S501 S501 DETAIL
SCALE: NONE

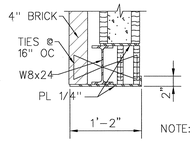

NOTE: FOR BEARING SEE DETAIL 10/S501 SIM.

12 S501 S501 DETAIL
SCALE: 1" = 1'-0"

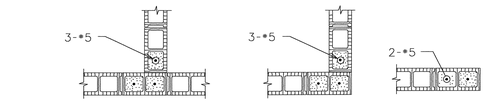

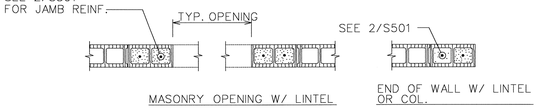

TYPICAL CONCRETE MASONRY UNIT DETAILS

1 S501 S501 SECTION
SCALE: NONE

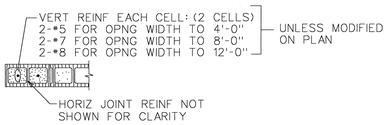

NOTE:
OPNG WIDTH SHALL NOT EXCEED 12'-0" FOR THIS TYPE OF JAMB

2 S501 S501 JAMB DETAIL
SCALE: NONE

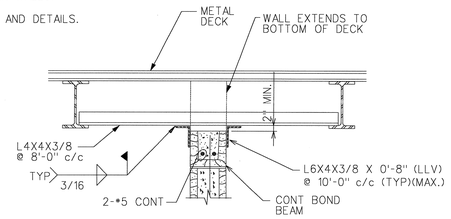

TYPICAL INTERIOR CMU WALL SUPPORT AT ROOF
WALL PARALLEL TO JOIST

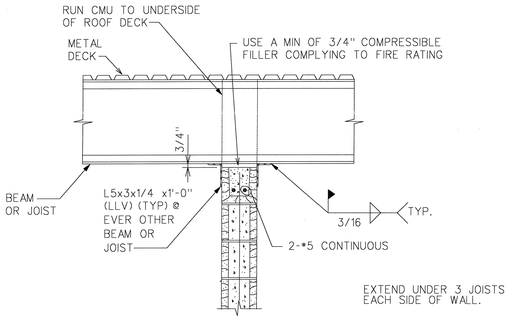

TYPICAL INTERIOR CMU WALL BRACING PERPENDICULAR TO JOIST OR BEAM

4 S501 S501 SECTION
SCALE: NONE

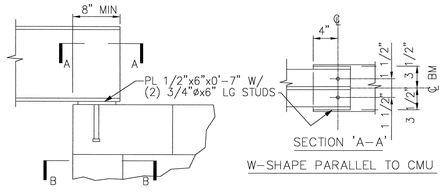

10 S501 S501 DETAIL
SCALE: 1" = 1'-0"

NOTES:

1. ALL CMU SHALL BE REINFORCED AS INDICATED, ON PLANS, SECTIONS, DETAILS INCLUDING ADDITIONAL REINFORCING AT ALL OPENINGS. TYPICAL CONDITIONS SHOWN ON THIS DRAWING ARE GENERAL AND SHALL BE USED TO COVER ALL CONDITIONS UNO.
2. ALL WALLS SHALL BE LATERALLY SUPPORTED AT TOP OR AT INTERFACE WITH STRUCTURAL MEMBERS (TYP). UNO
3. PROVIDE 3/4" MIN. GAP BETWEEN CMU AND BOTTOM OF SLAB OR STEEL, ETC. AND PROVIDE COMPRESSIBLE FILLER IN GAP THAT MAINTAINS FIRE RATING.
4. VERTICAL REINFORCING SHALL BE CONTINUOUS THRU LINTEL OR BOND BEAMS.
5. PROVIDE 16" MINIMUM BEARING FOR ALL CMU LINTELS.
6. ALL CELLS THAT CONTAIN REINFORCING BARS SHALL BE GROUTED SOLID.
7. FOR GENERAL NOTES SEE DRAWINGS S001 AND S002
8. ALL STRUCTURAL STEEL ROLLED SHAPES AND PLATES SHALL BE ASTM GRADE 36.

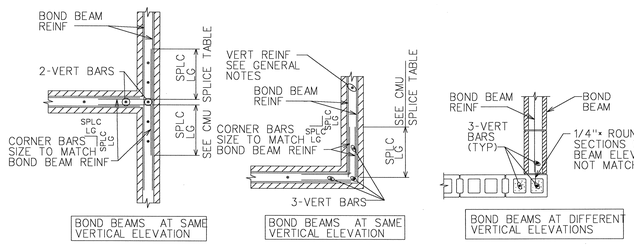

BOND BEAM REINFORCING AT WALL INTERSECTIONS

3 S501 S501 SECTION
SCALE: NONE

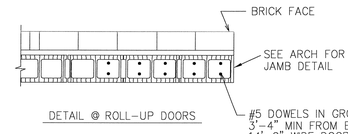

DETAIL @ ROLL-UP DOORS

5 S101 S501 DETAIL
SCALE: 1" = 1'-0"

TYPICAL CMU LINTEL SCHEDULE						
MAXIMUM CLR OPENING	WIDTH	DEPTH	HORIZONTAL REINF		STIRRUPS	MIN. BEARING @ EA. END
			BOTTOM	TOP		
4'-0"	8" OR 12"	8"	2-#4	—	#3 @ 12	8
6'-0"	8" OR 12"	1'-4"	2-#5	2-#4	#3 @ 12	8
8'-0"	8" OR 12"	1'-4"	2-#5	2-#4	#3 @ 12	16
10'-0"	8"	1'-4"	2-#6	2-#4	#3 @ 12	16
12'-0"	8"	2'-0"	2-#6	2-#6	#3 @ 12	16

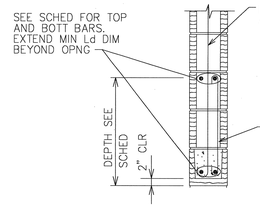

LINTEL BLOCK W/ GROUT

TABLE I CMU SPLICE TABLE	
BAR SIZE	BASIC LAP SPLICE Ld FOR CMU REINFORCING
#3	1'-6"
#4	2'-0"
#5	2'-6"
#6	3'-0"
#7	3'-6"

NOTES:

1. OPENING WIDTH SHALL NOT EXCEED 12'-0"
2. GROUT CELLS TO NOTED LINTEL DEPTH.
3. STIRRUPS SHALL HAVE 180° HOOK ON EACH END.

9 S501 S501 SECTION
SCALE: NONE

US ARMY CORPS OF ENGINEERS
SAVANNAH DISTRICT

DESIGNED BY	CHECKED BY	SIZE F
CATEGORY CODE 721-81-06		
CONTRACT NO: DACA21-02-C-0046		
DATE: 23 APRIL 2003		
PLOT SCALE:		

CLARK CONSTRUCTION
CLARK DESIGN/BUILD, LLC

SYMBOL	DESCRIPTION	DATE	BY

DESIGN FILE: $$FILE NAME$$
$$DATE$$

BASIC COMBAT TRAINEE BARRACKS COMPLEX I
FORT JACKSON, SOUTH CAROLINA
CENTRAL ENERGY PLANT

TYPICAL MASONRY SECTIONS AND DETAILS

PLATE REFERENCE NUMBER:
S-501
SHEET 23

CONFORMED DRAWINGS 11/21/03